Specification for the Charge Supplies
Capacitor Charge/Discharge Power Supply (CCDPS) for FLARE

March 11, 2016

Contents

List of Tables

List of Figures

1 Overview

A FLARE CCDPS module consists of a number of storage capacitors connected in parallel to a discharge switch. Each module is charged by a matched pair of switching power supplies, connected together to produce a bipolar output. In normal operation, a DPST normally-open relay closes for the charging period and disconnects the charging supplies prior to discharge. A network of resistors and diodes provide protection for the power supply under several failure scenarios discussed in Section 4.

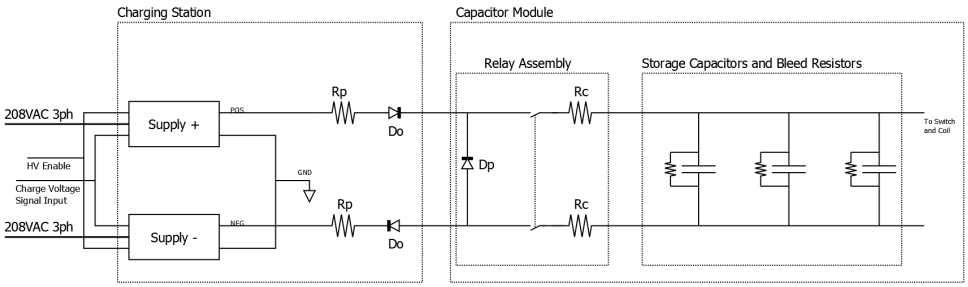

Figure 1: Charging scheme in use for the FLARE CCDPS banks. The resistor values are given in Table 1.

2 Charging Supplies

Each bank for the experiment has at least two supplies - having equal positive output and negative output to produce a bipolar output. TDK-Lambda supplies are used heavily, as their supply curves are closer to constant-power and are therefore more cost-effective in meeting the charge time specification (whereas the Spellman supply is constant-current, resulting in a power output that is quadratic in time). The constant-power charging curves were accounted for late in the design process; earlier iterations assumed constant current and required multiple supplies in parallel on some banks to meet the charge time specification – no bank requires parallel supplies in this final design. PFA and PFB are charged by the separate bipolar supplies to support charging to different voltages, as are TFA and TFB similarly. Under initial operation the reduced-energy banks will be connected in parallel, trading operational flexibility for reduced expenditures in the early phase. All charging supplies operate on 3-phase 208VAC or 24VDC. For the 24VDC modules a power supply is included so all the power supplies ultimately derive power from 208VAC.

	OH	EF	GF	PFA/B	TFA/B	DCI	DCO
Supply models (see table below)	(a)	(b)	(a)x3	(a)	(c)	(d)	(e)
Protection Resistor value (Rp) [Ω]	180	2.2	54	100	640	180k	70k
Protection Resistor rating [W]	50	20	200	100	20	1	1
Charge Resistor value (Rc) [Ω]	1600	10	720	2000	5600	1.6M	640k
Charge Resistor rating [W]	2000	2000	2000	2000	2000	10	10
Charge module bleed resistor value (Rb) [MΩ]	-	-	-	-	-	2000	800

	Manufacturer	V_{max} [kV]	Qty. Ea. full power	Qty. Ea. initial	Supply (+) model	Supply (-) model
(a)	TDK-Lambda	10	6	3	402L-10kV-POS-208VAC	402L-10kV-NEG-208VAC
(b)	TDK-Lambda	1	1	1	402L-1kV-POS-208VAC	402L-1kV-NEG-208VAC
(c)	Spellman	10	2	1	SLM10P1200	SLM10N1200
(d)	UltraVolt	30	1	-	30C24-P60-I10	30C24-N60-I10
(e)	UltraVolt	30	1	-	30C24-P125-I10	30C24-N125-I10

Table 1: Charge supply and resistor specifications.

	Supply Model	Qty. Ea. full power	Current draw (ea) [A]	Subtotal [A]
(a,b)	TDK-Lambda 402L	14	25	350
(c)	Spellman SLM10	2	7	14
(d,e)	Mean Well LRS-350-24	1	2	2
			Total Amps:	366

Table 2: Facility power requirements for charging supplies. All supplies operate on 208VAC 3-phase.

Manufacturer	HV ON pins	$V_{control}$ range	$V_{control}$ pin	Voltage ref (GND) pin
TDK-Lambda 802L	8,14	0-10V	22	24
TDK-Lambda 402L	8,14	0-10V	22	24
Spellman SLM10	11,12 (J2)	0-10V	3	9
Advanced Energy/UltraVolt	4,7	0-10V	6	5

Table 3: Supply control interface.

Facility power requirements for the charging supplies are listed in Table 3. All charge supplies shall have their power interrupted by normally-open relay upon receipt of the Emergency Stop signal.

The high voltage output stage of each supply is enabled by relay-closure at the bank module NEMA box, as commanded by a fiber-isolated Digital Output from an NI 6229 module at the CCDPS DAQ chassis (one channel per coil system). All charging supplies are controlled by 0-10VDC analog signal representing a charge voltage from 0 to the maximum supply output voltage listed in Table 1. This control signal is produced by Analog Output from an NI 6229 module at the CCDPS DAQ chassis (one channel per coil system). Please see the Specification for CCDPS DAQ for connection schematic.

3 Charge Connect Modules

One charge connect module is installed at each capacitor bank module. The charge connect module consists of two charge resistors, one DPST relay for connecting the charge supply to the bank, and one protection diode, as seen in Figure 2. The charge resistors reduce the risk of charging supply damage in the case of a busswork arc, ground fault, or capacitor failure; they are rated to 2kW and are of wire-wound type (as the added inductance improves fault isolation) except for DCI and DCO which only require 10W power rating. The role of the protection diode is described in Section 4.

The DCI and DCO modules utilize the 60kV variant of the charge connect module, which is designed for immersion of the components in insulating oil. The 60kV variant may be operated below 30kV without oil. Included in this variant is a bleed resistor that slowly discharges the capacitor as a final redundant energy dump. The bleed resistor is included with the charge connect module in this case in order to reduce the component count near the discharge and crowbar switches, enabling the lowest inductance design. The larger, lower-voltage banks utilize a bleed resistor installed on each individual capacitor; those are discussed in the Dump section of the specification of each of those banks. The 60kV charge connect module also includes the supply protection resistors so that they are immersed in oil without requiring another oil reservoir.

4 Charge supply protection

If a bank pre-fires, the charge relays will still connect the charging supplies to the bank and any programmed crowbar will not operate. This potentially presents a large reversed voltage to the charging supply. The charging supply might also be exposed to reversed voltages if the charge disconnect relay fails in the closed state. A protection diode is installed across the charging supply connection to mitigate these risks (labeled Dp in Figure 1, value given in Table 4). Under normal charging the diode is reverse-biased and does not

Diode	OH	EF	GF	PFA/B	TFA/B	DCI	DCO
Do	B412-50-25	B412-50-25	B412-50-25	B412-50-25	B412-50-25	B412-50-25	B412-50-25
Dp	B412-50-25	B412-50-25	B412-50-25	B412-50-25	B412-50-25	B980-125	B980-125

Table 4: Diode specifications. All model numbers are from manufacturer EDAL.

conduct appreciable current. In the event of a pre-fire and bank reversal the diode becomes forward-biased. The current in the diode is then limited by the charge resistor, and the voltage reversal presented to the charging supply is limited to the forward voltage drop of the diode.

Protection resistors are installed on the output of each power supply that operate in complement to the protection diodes described above. If a connected capacitor bank pre-fires, reversed voltages on the charging supply cable are limited to the protection diode's forward voltage drop; the additional protection resistor limits the current that arises in the supplies' internal protection diodes due to the resulting forward bias. Additionally if a short-circuit failure occurs along the charge line the protection resistors will limit the prompt current until the supplies can register the overload condition. These resistors are designed not to limit the supply current under normal operation. The combination of charge resistor, protection diode, and protection resistor follows the recommendations of Ref. [2], adapted to a bipolar supply.

In the event of a ground fault the bipolar capacitor bank will shift far away from balanced voltages – potentially doubling the voltage with respect to ground. If such a fault occurs while the charge disconnect relay is still connected to the charge supply then the lifted voltage might destroy the supply. Output diodes are installed that would become reverse-biased in this case, providing a voltage drop to match the supply output and preventing damage. These are labeled Do in Figure 1, and values are given in Table 4.

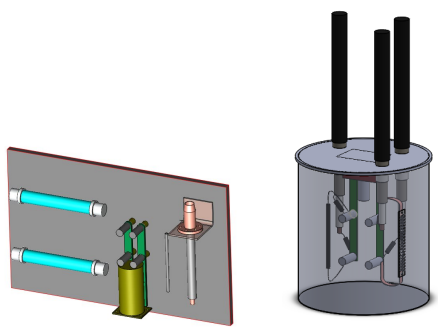

(a) (b)

Figure 2: Charge connect module CAD models: (a) 20kV variant, (b) 60kV variant. The resistor values are given in Table 1.

5 Mounting in rack

Every 802L is 5U, every 402L is 4U, spellmans need a shelf (26lb load) and are about 3U tall. Total is 68U, which is at least 2 standard racks (40-42U each). The UltraVolts can go on one shelf with their 24V supply.

6 References

References

[1] Statement of Work for Design of Capacitor Charge/Discharge Power Supply (CCDPS) for FLARE FLARE-CCDPS-150828, Revision 0, Sept. 9th 2015

[2] Interfacing Pulsed Power Systems to Switching Power Supplies, Presented at International Power Modulator Conference, Hollywood, California, July 1-3, 2002

7 Appendices

7.1 Vendor specifications and datasheets

a.l.e. systems

402 Series Data Sheet

High Voltage Power Supply
Capacitor Charging and DC
Output Voltage from 1kV - 50kV
Output Power 4kJ/sec or 4kW
Full local and remote control

TDK·Lambda

www.us.tdk-lambda.com/hp

402 Series Specification

Industry standard rack mount capacitor charging and DC power supplies with 4kJ/sec rating for capacitor charging, or 4kW rating in continuous DC applications.

- **Power rating of 4kJ/sec, 5kJ/sec peak**
- **Output Voltages from 0-1kV to 0-50kV**
- **Compact air cooled rack mount package**
- **Efficient IGBT based resonant inverter**
- **Excellent pulse to pulse repeatability**
- **208 or 400VAC 3Ø input voltage**
- **Comprehensive remote control interface**
- **UL Approved AC line contactor (optional for OEM models)**
- **Ultra reliable and rugged industry standard design**
- **Passive PFC (pf = 0.85)**
- **Full local output voltage and HV On/Off controls (L version)**
- **Simple parallel operation for higher power**
- **Lab, Slave, or OEM front panel options**

Average Capacitor Charging Power	4,000 Joules/sec ($\frac{1}{2}CV^2$ x Rep Rate)
Peak Capacitor Charging Power	5,000 Joules/sec ($\frac{1}{2}CV^2/t_{charge}$)
Average Continuous DC Power	4,000 Watts
Output Voltage Range	1, 2, 4, 5, 10, 15, 20, 30, 40, 50kV, variable from 10-100% of rated
Polarity	Available as fixed Positive or Negative. Please specify at time of ordering
HV Output Cable	1-39kV Models - DS2124 Coaxial cable with proprietary HV connector
	40-50kV Models - DS2214 Coaxial cable with proprietary HV connector
HV Insulating Medium	Exxon Mobil Univolt N61B or equivalent insulating oil
AC Input Voltage	208VAC (180-264), 3Ø or 400VAC (340-460), 3Ø + N, specify at time of ordering
AC Input Current	20A/15A
AC Connector	UL/CSA approved terminal block. 3Ø + ⏚ for 208VAC, 3Ø + N + ⏚ for 400VAC
AC Line Contactor	UL/CSA approved AC line contactor (standard on 402L and 402S, option for 402OEM)
Power Factor	Passive PFC pf = 0.85 at full load and nominal AC line
Efficiency	Better than 85% at full load
Front Panel	402L - Voltage Control, Voltage & Current Meters, Status Indicators
	402S - On/Off Switch, Status Indicators
	402-OEM - Blank front panel
Stability	0.2% per hour after 1 hour warmup
Temperature Coefficient	100ppm per °C typical
Stored Energy	Less than 0.3J all models
Pulse to Pulse Repeatability	±2% to 1000Hz, consult factory for higher rep rates
Dimensions - inches (mm)	19 (483) W x 7 (178) H x 17 (432) D
Weight - lbs (kg)	65 (30)
Ambient Temperature	Storage: -40 to +85°C. Operating: -20 to +45°C
Altitude	Storage: 40,000ft (12,000m), Operating: 9,900ft (3,000m)
Humidity	10-90%, non-condensing
Protection	Open/short circuits, Overloads, Arcs, Overtemp, Overvoltage, Safety Interlock
Remote Control (all models)	Via 25-pin D-sub connector on rear of unit, Signals include, Vprogram (0-10V), HV Enable/Reset, Inhibit, Summary Fault, Load Fault, Vanalog, Vpeak
Accessories	10ft HV cable, operating manual
Options	EN - Low Enable. Replaces standard high enable
	5V - 0-5V Analog programming. Replaces standard 0-10V programming.
	LP - Latching Overload Protection, requires HV reset after overload fault
	DC - Continuous DC operation
	CT - AC line contactor (option for 402OEM models only, standard on 402L and 402S)
	Double terminated HV cable, and mating bulkhead connector
Ordering Info	Model - XXkV - POS (or NEG) - YYYVAC - ZZ (options)
Ordering Examples	402L-10kV-POS, 402S-1kV-NEG-DC, 402-OEM-50kV-POS-400VAC
All specifications subject to change without notice	

402 Series Mechanical Details

402L Front View

402L Rear View

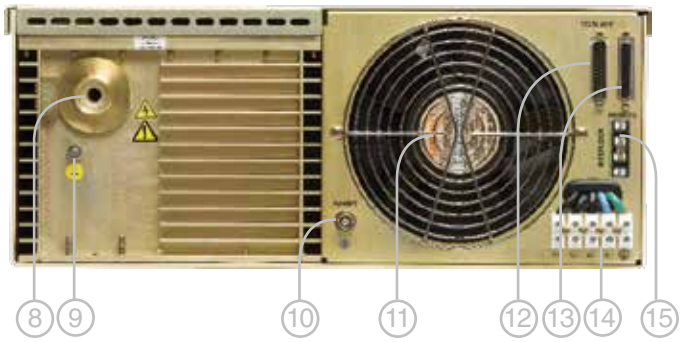

1 - HV On/Off Push Buttons (L model only)
2 - Status Indicator LEDs (L and S models only)
3 - Local/Remote Keyswitch (L model only)
4 - 10-Turn HV Output Control (L models only)
5 - View Set Push Button (L models only)
6 - Output Voltage and Current Displays (L models only)
7 - Power Switch (L and S models only)

8 - HV Output Connector
9 - Ground Stud
10 - Inhibit BNC (L models only)
11 - Cooling Fan
12 - Slave Supply Programming Connector (L models only)
13 - Remote Programming Connector
14 - AC Input Terminal Block
15 - Interlock Terminals (L and S models only)

Outline Drawings

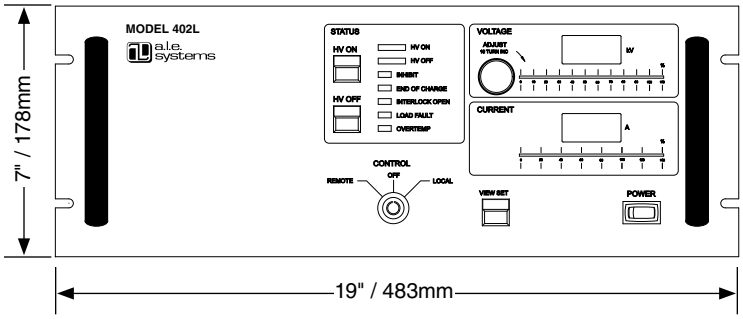

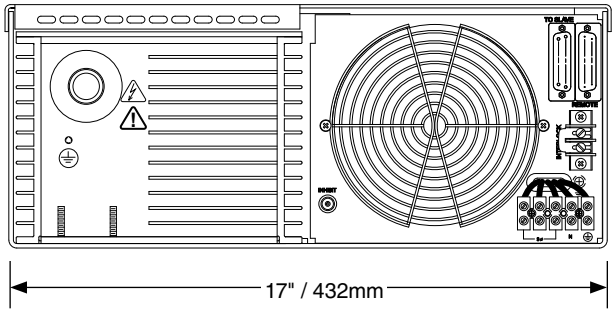

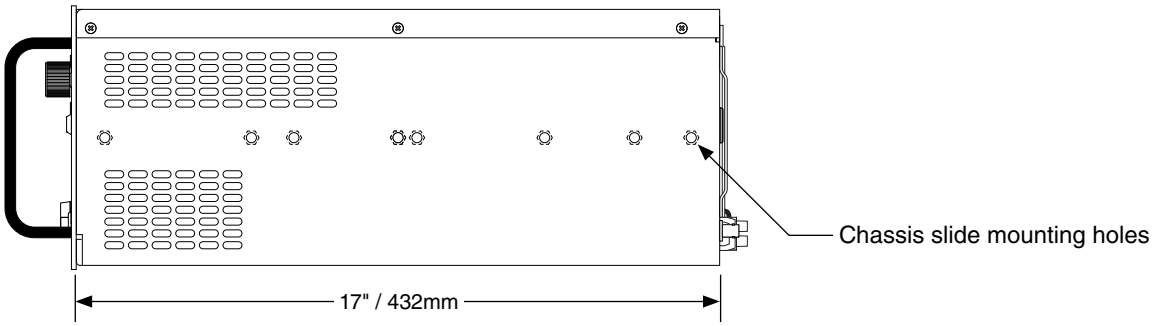

Notes:
1 - Chassis slide mounting pattern matches General Devices CT series or equivalent with 3.875" hole spacing.
2 - Cooling air enters rear of unit and exits at either side. Do not block air vents or cooling fan and allow several inches of clearance at rear of unit.
3 - Allow 6" bend radius at rear of unit for HV cable.

GLOBAL HIGH VOLTAGE NETWORK

NORTH AMERICA

TDK-Lambda Americas Inc., High Power Division
405 Essex Rd. Neptune, NJ 07753
Tel: +1-732-922-9300, Fax: +1-732-922-1441
E-mail: andy.tydeman@us.tdk-lambda.com
Web: www.us.tdk-lambda.com/hp

CANADA

TMetrix
5805 Kennedy Road Mississauga,
Ontario L4Z 2G3
Tel: +1-905-890-2010, Fax: +1-905-890-1959
E-mail: lambda@aca.ca, Web: tmetrix.com

UK **IRELAND**

Pulse Power & Measurement Ltd.
65 Shrivenham Hundred Business Park
Watchfield, Swindon
Wiltshire, SN6 8TY
Tel: +44-1793-784389, Fax: +44-1793-784391
Email: sales@ppm.co.uk, Web: www.ppmpower.co.uk

FRANCE **BELGIUM** **SPAIN** **NETHERLANDS** **LUXEMBOURG**

TDK-Lambda France
ZAC des Delaches CS 41077, 9 rue Thuillere
91978 Villebon Courtaboeuf
Tel: +33 1 60 12 71 65, Fax: +33 1 60 12 71 66
Email: france@fr.tdk-lambda.com
Web: www.fr.tdk-lambda.com

GERMANY **AUSTRIA** **SWITZERLAND**

Guth GmbH
Spitzenbergstrasse 6
D – 73084 Salach
Tel: +49-7162-948930, Fax: +49-7162-9489399
Email: kontakt@guth-hv.de, Web: www.guth-hv.de

ITALY

TDK-Lambda Italy
Via dei Lavoratori 128/130
IT 20092 Cinisello Balsamo (MI)
Tel: +39-02-6129-3863, Fax: +39-02-6129-0900
Email: info.italia@it.tdk-lambda.com
Web: www.it.tdk-lambda.com

SCANDINAVIA **BALTICS**

Divisoft AB
Rallarvägen 41, SE-184 40 Åkersberga, Sweden
Tel: +46 8 540 248 09, Fax: +46 8 501 096 53
Email: iain@divisoft.se, Web: www.divisoft.se

ISRAEL **RUSSIA** **UKRAINE**

TDK-Lambda Israel Ltd.
Kibbutz Givat Hashlosha Tel-Aviv 48800
Tel: +972-3-9024-333, Fax: +972-3-9024-777
Email: info@tdk-lambda.co.il, Web: www.tdk-lambda.co.il

BRAZIL

Suplitec
Rua Sena Madureira 455, Belo Hte - 31340-000
Tel: +55-31-3498 1177, Fax: +55-31-3441 0841
Email: vendas@suplitec.com.br, Web: www.suplitec.com.br

MEXICO

AcMax De Mexico
Rosas 139 Col. Bugambilias. Puebla, Pue. C.P. 72580
Tel: +52-800-211-0060, Fax: +52-264-1445
Email: edaena@acmax.mx, Web: www.acmax.mx

JAPAN **KOREA**

Electronics Optics Research, Ltd
4-26-19 Koenji-Minami
Suginami-ku, Tokyo 166-0003
Tel: +81-333-145699, Fax: +81-333-142333
Email: imamura@eor.jp, Web: www.eor.jp

CHINA

TDK-Lambda Shanghai Office
2nd Floor of Building No.1, No.15 Guiqing Road,
Shanghai, 200233 P.R. China
Tel: +86-21-64850777, Fax: +86-21-64850666
Email:sales-sh@cn.tdk-lambda.com
Web: www.cn.tdk-lambda.com

MALAYSIA

TDK-Lambda Malaysia
No.7.3, 7th Floor, Jaya Shopping Center,
Jalan Semangat Section 14, 46100
Petaling Jaya Selangor, D.E
Tel: +60-3-7957-8800 Fax: +60-3-7958-2400
Web: www.tdk-lambda.com.my

SINGAPORE **PHILIPPINES** **THAILAND**

TDK-Lambda Singapore
1008 Toa Payoh North # 06-01/08
Singapore 318996
Tel: +65-6251-7211 Fax: +65-6250-9171
Web: www.se.tdk-lambda.com

INDIA

TDK-Lambda India
#526, Ground Floor, 10th Main, 7th Cross,
Jeevanbhimanagar, Bangalore 560 075, Karnataka, India
Tel : +91-80-43550500, Fax :+91-80-43550501
Email: mathew.philip@in.tdk-lambda.com
Web www.in.tdk-lambda.com

SOUTH AFRICA

PaR Systems (Pty) Ltd.
Pretoria, South Africa
Tel: +27-12-5480370, Fax: +27-12-5480447
Email: ndupreez@par.com
Web: www.sdilasers.com

93 008 009 Rev G

TDK-Lambda Americas Inc. 405 Essex Road, Neptune, NJ 07753 USA
Tel: +1 732 922 9300 Fax: +1 732 922 1441
www.us.tdk-lambda.com/hp

OPERATOR MANUAL FOR

402 Series High Voltage

POWER SUPPLY

Document: 83-487-001 Rev F

TDK-LAMBDA AMERICAS

405 Essex Road, Neptune, NJ 07753

Tel: (732) 922-9300

Fax: (732) 922-9334

Web: www.us.tdk-lambda.com/hp

Table of Contents

List of Figures

List of Tables

1. GENERAL INFORMATION

1.1. User Manual Content

This User's Manual contains the operating instructions, installation instructions and specifications for the ALE 402 series high voltage power supply. The instructions refer to standard power supply models, and include checkout, installation, and operation of the 402 series. Suggestions and requirements for connecting AC power, load cables and signal cables are given. Various operating modes and programming modes are described.

The model 402 is just one model in a broad family of HV power supplies covering the power range from 500J/sec to 30kJ/sec in a single package, and to 1MW and beyond in parallel systems. For more information please visit our web site at http://www.us.tdk-lambda.com/hp/product_html/high_volt.htm.

NOTE

This manual contains information, instructions and diagrams which apply to standard constructions. If special features or modifications have been installed, the instructions specific to that modification are contained in Addena and take precedence if conflicts exist. Please take care to refer to the correct information for your unit.

1.2. Introduction

TDK-Lambda Americas ALE model 402 are state of the art switch mode high voltage power supplies, designed to rapidly and efficiently charge capacitors in laser systems, modulators, pulse forming networks, and a broad range of pulse generator circuits, without the need for a series current limiting resistor. They can also be used in many continuous DC applications including beam power for RF devices such as magnetrons, gyrotrons, klystrons and electron beam loads.

The 402 series utilize a high frequency IGBT based series resonant inverter topology which operates as a constant current source. This makes the supply perfect for rapidly charging capacitors which represent a challenging load for conventional HV DC supplies using multiplier designs.

The 402 series is available with a choice of three different front panel configurations designed to suit different applications and end uses. All models feature the same comprehensive remote control interface which is detailed in Section 6.2.

The 402L Model is fully instrumented with front panel meters displaying output voltage and current, status LEDs, a key switch for OFF, LOCAL or REMOTE operation, HV ON/OFF push-button switches, and a 10 Turn output voltage control. The rear panel features external interlock, inhibit, remote control and slave (parallel operation) control connections.

The 402S Model can only be operated by remote control and features only status LEDs and a power switch on the front panel. The "S" Models have been designed to operate as a slave unit to the "L" Models or in systems where local control is not a requirement. As many 402 supplies as required, can be connected in parallel to provide greater output power.

The 402OEM features a blank aluminum front panel and can only be operated by remote control.

1.3. 402 Overview

1.3.1. Features

- 4kJ/sec capacitor charging power, 4kW in continuous DC applications.
- Output voltages from 0-1kV to 0-50kV.
- Rep rates from single shot to kilohertz.
- Local or remote operation (L Model) with comprehensive control interface.
- Cost effective blank front panel version for OEM applications.
- Constant current topology for rapid efficient charging.
- Parallel operation (master/slave) for high power applications.
- Compact Air Cooled design.
- Passive Power Factor Correction reduces RMS current draw.

1.3.2. Benefits

- Lightweight switchmode design.
- Rack mount chassis configuration.
- Low stored energy provides greater safety.
- Constant current design requires no lossy current limit resistance.
- Immunity to external EMI.

1.3.3. Applications

- Charging capacitors and capacitor banks.
- Powering pulse forming networks/modulators.
- Powering lasers: Excimer, flashlamp pumped dye, Yag, CO_2, etc.
- Continuous power for RF tubes – magnetron, gyrotron, TWT, klystron etc.
- Electron beam applications.
- DC power source for pulsed hard-tube and solid state modulators.

1.4. Capacitor Charging Technology

Capacitor charging applications require a power supply designed specifically for the task. The 402 series supplies allow capacitors to be charged in pulse forming networks and modulators in a very fast, efficient and controllable manner.

The units are compact high power constant current sources that can linearly and rapidly charge a capacitive load to high voltage. Once the load capacitor is charged to the programmed voltage, the supply will switch over to a voltage regulation mode and maintain the load voltage at the programmed level, until the load is discharged.

The flexible design of the 402 allows the unit to be ordered with (L model) or without (S and OEM model) the front panel controls and meters. Front panel controls are ideal in applications where local control and read backs are necessary, such as R&D, laboratory use and diagnostics. All front panel controls and indicator signals are available at the rear panel remote control connector regardless which panel option (L, S, or OEM) is selected.

The unit is self-contained, requiring only AC power and appropriate controls. Several units may be connected in parallel for higher power operation. There is no theoretical limit to the number of units that may be paralleled. Typically one master unit and one or more slave or OEM units may be used to obtain as much output power as necessary. The 402 is also ideally suited to charge reservoir capacitors in resonant charging circuits where high rep rates (several kilohertz) are required, such as in metal vapor lasers or solid-state modulators.

1.5. Continuous DC Operation

Although the 402 series has been designed for capacitor charging applications, they can also be used as a continuous DC High Power Source for RF tubes such as klystrons, TWTs, or other DC loads such as DC-DC converters. The DC option must be specified when ordering, and the supply will be factory setup and tested with a continuous DC load. When 402 supplies are operated in continuous DC applications it is often necessary to add an external capacitor between the load and ground to improve the ripple performance of the unit. Our online Application Note 505 describes operating capacitor charging supplies in DC applications, and gives guidance in determining the size of any additional external filter capacitance required. App Note 505 can be found at:

http://www.us.tdk-lambda.com/hp/pdfs/application%20notes/93008505rC.pdf

Consult the factory before connecting parallel units in continuous DC applications.

1.6. Additional Features:

- Internal contactor and fuses for AC disconnect and protection
- Standard AC power and control connectors
- Documentation Manual Including -
  Installation, check out, suggested remote interfaces and control circuits
- 10 ft (3m). Output cable is standard, other lengths are optional.

1.7. Safety Precautions

All 402 power supplies are designed to minimize the risk of fire or shock hazard. This instrument received comprehensive mechanical and electrical inspection prior to shipment. Nevertheless, certain safety precautions must be observed. Only TECHNICALLY QUALIFIED SERVICE PERSONNEL familiar with the principles of electrical safety should operate this supply. The power supply SHOULD NOT BE EXPOSED TO WATER OR MOISTURE OR DUSTY ENVIRONMENTS. Electrical safety must be maintained at all times.

Lethal voltages are developed within the power supply's enclosure and at the output cable. Therefore, the cover may not be removed by the user (see Warranty in preamble section for variance). Also, the large capacitors in the supply may store power even after the AC input line is removed. ALLOW AT LEAST 40 SECONDS DISCHARGE TIME between removing the AC input line and opening the cover. ALSO, ALLOW AT LEAST 40 SECONDS between switching the AC power off and switching it on again.

1.7.1. This product is designed for Indoor use.

1.7.2. This product is designed for pollution degree 2.

1.7.3. This product is designed for Transient Overvoltage Category II

1.7.4. Ensure all covers are in place and securely fastened before switching ON the AC power.

1.7.5. Proper grounding from the input AC power is required to reduce the risk of electric shock. Ensure that the AC Protective Earth Ground connection has at least the same gauge wire as the supply leads shown in Table 2.

1.7.6. Use extreme caution when connecting AC input power, and never apply the incorrect input voltage, refer to ratings label.

1.7.7. Use extreme caution when connecting the high voltage output cable to the load.

1.7.8. Ensure all load capacitors are completely discharged prior to connection. Never handle the output cable when the power supply is operating.

1.7.9. Never attempt to operate the power supply in any manner not described in this manual.

1.7.10. Never remove DANGER and WARNING labels from the power supply. Replace lost or damaged labels immediately.

1.7.11. The power supply should only be serviced by factory authorized personnel.

1.7.12. No user maintenance is required.

1.8. Model Number Format

The model numbering system for the 402 Series power supply includes symbols for features and options. They are separated by dashes.

Examples are: 402L-10kV-POS-400VAC and 402S-20kV-POS-DC.

The 402 is available with three front panel configurations, the L, S, and OEM. The choice of panel configuration is dependant upon the installation and system requirements. See section 5 for further details.

Table 1 shows a partial listing of the model description format for the 402 Power Supply family. For additional options, the customer may contact the Sales Department at TDK-Lambda Americas. Special options are typically shown as a four-digit suffix to the model number.

402(model) - (voltage) - (polarity) - (mode) - (input) - (options)

Model (L, S, OEM)
Output Voltage Range kV
POS or NEG Polarity

Mode		
Standard	Capacitor Charging	Blank
DC	Continuous DC Operation	DC

AC INPUT VOLTAGE		
	Input	Suffix
Standard	180-264VAC, 50-60Hz, 3ϕ (20A Max)	Blank
400VAC Option	340-460VAC + N, 50-60Hz 3ϕ (15A Max)	400VAC

OPTIONS	
5V Programming	5V
Low Enable	EN
Latching Overload	LP
AC Contactor (OEM only)	CT
Custom cable length	xxxx

Table 1 :402 Model Description Format .

2. SPECIFICATION

2.1. Average Charging Power	4,000 Joules/sec ($\frac{1}{2}CV^2$ x Rep Rate)
2.2. Peak Charging Power	5,000 Joules/sec ($\frac{1}{2}CV^2 / t_{charge}$)
2.3. Average DC Power	4,000 Watts
2.4. Output Voltage Range	1, 2, 4, 5, 10, 15, 20, 30, 40, 50kV, variable from 10-100% of rated. Other voltages on request, please contact the factory.
2.5. Polarity	Available as fixed Positive or Negative. Please specify at time of ordering
2.6. HV Output Cable	1-39kV Models - DS2124 Coaxial cable with proprietary HV connector
	40-50kV Models - DS2214 Coaxial cable with proprietary HV connector
2.7. HV Insulating Medium	Exxon Mobil Univolt N61B or equivalent insulating oil
2.8. AC Input Voltage	200-240VAC (180-264), 3Ø or380-440VAC (340-460), 3Ø + N, 50-60Hz Please specify at time of ordering
2.9. AC Input Current	20A/15A
2.10. AC Connector	UL/CSA approved terminal block. 3Ø + GND for 200-240VAC, 3Ø + N + GND for 380-440VAC
2.11. AC Line Contactor	UL/CSA approved AC line contactor (standard on 402L and 402S, option for 402OEM)
2.12. Power Factor	Passive PFC pf = 0.85 at full load and nominal AC line
2.13. Efficiency	Better than 85% at full load
2.14. Front Panel	402L - Voltage Control, Voltage & Current Meters, Status Indicators
	402S - On/Off Switch, Status Indicators
	402-OEM - Blank front panel
2.15. Stability	0.2% per hour after 1 hour warmup
2.16. Temperature Coefficient	100ppm per °C typical
2.17. Stored Energy	Less than 0.3J all models
2.18. Pulse to Pulse Repeatability	±2% to 1000Hz, consult factory for higher rep rates
2.19. Dimensions - inches (mm)	19 (483) W x 7 (178) H x 17 (432) D
2.20. Weight - lbs (kg)	65 (30)
2.21. Ambient Temperature	Storage: -40 to +85°C. Operating: -20 to +45°C
2.22. Altitude	Storage: 40,000ft (12,000m), Operating: 9,900ft (3,000m)
2.23. Humidity	10-90%, non-condensing
2.24. Protection	Open/short circuits, Overloads, Arcs, Overtemp, Overvoltage, Safety Interlock
2.25. Remote Control (all models)	Via 25-pin D-sub connector on rear of unit, Signals include, Vprogram (0-10V), HV Enable/Reset, Inhibit, Summary Fault, Load Fault, Vanalog, Vpeak
2.26. Accessories	10ft HV cable, operating manual

2.27. Options	EN - Low Enable. Replaces standard high enable
	5V - 0-5V Analog programming. Replaces standard 0-10V programming.
	LP - Latching Overload Protection, requires HV reset after overload fault
	DC - Continuous DC operation
	CT - AC line contactor (option for 402OEM only, standard on 402L and 402S)
	Double terminated HV cable, and mating bulkhead connector
2.28. Ordering Info	Model - XXkV - POS (or NEG) - YYYVAC - ZZ (options)
2.29. Ordering Examples	402L-10kV-POS, 402S-1kV-NEG-DC, 402-OEM-50kV-POS-400VAC
All specifications subject to change without notice	

3. OUT OF BOX INSPECTION

3.1. Visual Inspection

Prior to shipment, this instrument was inspected and found to be free of mechanical and electrical defects. As soon as the unit is unpacked, inspect for any damage that may have occurred in transit. Verify the following:

a) Check the operation of the front panel control (knob should rotate smoothly).
b) Confirm that there are no dents or scratches on the panel surfaces.
c) Check front panel meters and LEDs for any broken or cracked lenses.

If any damage is found, follow the instructions in Section 3.3.

3.2. Electrical Inspection

Before the power supply is installed in a system, verify that no internal damage occurred during shipping. A set of simple preliminary electrical test can be performed if desired. These tests are described below.

NOTE
The sequences described are for L model supplies with local controls, for S and OEM models the corresponding signals must be applied and monitored through the remote control interface.

3.2.1. Test 1

Purpose: Verify general logic operation, generate maximum output current, and check overload protection circuits. With AC power "OFF" and disconnected, short the HV output by connecting the center conductor of the output cable to its return shield (braid). This dead short will allow the unit to generate full output current at zero voltage.

1. Set the output voltage control to zero. Connect AC power to the unit. Turn "ON" the AC power front panel switch.
2. Turn the front panel keyswitch to the LOCAL position (if applicable). Press the HV "ON" button and turn up the HV control until the power supply is generating output current into the dead short. The current meter will indicate max. current. The voltage meter will read zero and the power supply will intermittently turn on and off indicating the "overload" condition. The unit should continue to indefinitely cycle in this mode with a 1 second period. (The power supply will go into overload when max. current is drawn for more than half a second).
3. Turn off the HV and AC power switches.

This test indicates the inverter section is generating maximum current and the logic and overload circuitry works correctly.

3.2.2. Test 2

Purpose: Verify that the power supply generates maximum rated voltage, and the regulation and feedback circuits are functioning.

1. With AC power OFF and disconnected, connect an appropriate load capacitor to the power supply output cable. Select the capacitor size so the charge time is several milliseconds or more.
2. Prepare to charge the capacitor. NOTE: Operating a 402 power supply into an open circuit (no load operation) will instantly damage the power supply's HV output diodes. Make sure the load (capacitor) is connected and the HV output cable is securely inserted and connected.

3. Turn the voltage control on the front panel all the way down to zero (counter clockwise), apply AC power and press the HV ON button. By turning up the HV control knob the capacitor will charge to the voltage indicated on the front panel voltmeter. The power supply may be turned all the way up to its max. output voltage provided the load capacitor is sufficiently rated.
4. By turning the voltage control down or depressing the HV OFF button, the capacitor will slowly "bleed" down through the internal voltage divider resistors used for regulation feedback. Use an external discharge wand to ensure the capacitor is fully discharged.

Test #2 indicates the HV section is working correctly. Tests 1 and 2 generally indicate the unit is functioning as designed. Although 100% power had not been generated, these two tests give greater than 90% confidence that the unit is not damaged.

If any inconsistency from the above test procedure is noted, do not hesitate to call TDK-Lambda Americas Customer Service for assistance.

3.3. Contacting TDK-Lambda Americas Customer Service

When contacting customer service locate the product description, part number and serial number from the label located on the rear of the unit, and have this information available.

Phone: (732) 922-9300 x 342 E-mail: hp.service@us.tdk-lambda.com
Fax: (732) 922-1441

Customer Service, or an approved Service Center, should be contacted if:

- The power supply is mechanically or electrically damaged.
- The power supply requires on-site calibration, or replacement warning decals.
- The customer has questions about a special application that is not described in this manual.

Normally, the customer may *NOT* open any chassis covers that have a warranty seal. Breaking a seal will void the warranty.

At the discretion of TDK-Lambda Americas, the customer may be granted permission to break the warranty seal and open the chassis covers. Customer Service shall confirm the permission by sending a replacement seal. Once the unit has been serviced, the customer shall close the cover and apply the replacement seal adjacent to (not on top of) the broken seal.

3.4. Returning Defective Units

If a unit needs to be returned to the factory for repair, the factory must first assign an RMA number. Please complete and send the online RMA request form at http://www.us.tdk-lambda.com/hp/RMA_request.htm and an RMA number will be assigned. Follow the return instructions on the form or at http://www.us.tdk-lambda.com/hp/returns.htm.

4. INSTALLATION

4.1. 19-Inch Rack Mounting

This power supply is intended for mounting in a conventional 19-inch equipment rack. It's 7 inch height makes it a "4U" size instrument. The rack should enclose the sides, top and back to protect the operator from electrical shock and protect the supply from environmental contamination.

Never install the 402 so its weight is supported only by the front panel screws!

The 402 must never be installed without support in the back or sides of the unit. The 402 should be mounted on support rails or chassis slides –such as General Devices CTS-124- or on a suitable shelf or supports inside the rack.

4.2. Ventilation Requirements

This instrument is fan cooled. Sufficient space must be allocated so that a free flow of cooling air can reach the back and sides of the instrument when it is in operation. Ensure these clearances are met for adequate air flow:

- 4 inches (10 cm) rear
- 1 inch (2.5 cm) on each side.

Cooling air enters through the rear of the unit, and is forced out of the side panels. This power supply should not be operated with its cover removed since the cover directs the flow from the internal fan.

When operating in an enclosed system, care must be taken to ensure the ambient inlet air to the power supply does not exceed the maximum operating temperature of 45°C. This may require addition of a system heat exchanger.

4.3. Orientation

The power supply must be operated in a level horizontal orientation. More than a quarter of an inch (6.25mm) difference in height in any direction could potentially cause an arcing condition in the high voltage tank and should be avoided.

4.4. AC Power Connection

For 200-240VAC models, the maximum voltage allowed between any two AC input terminals is 264VAC. For 380-440VAC models, the maximum voltage allowed between any two AC input terminals is 460VAC. If this voltage is exceeded, catastrophic damage will result, that is not covered by TDK-Lambda Americas standard warranty.

The customer's AC power line connects to the 402 via a UL/CSA approved 5 position terminal block on the rear panel of the unit (see Figure 1). Only use a power cable with the correct voltage and current rating (see Table 2). The ground wire must be equal to or larger than the recommended gauge. Secure grounding of the input AC power is required to reduce the risk of electric shock. The metal chassis of the power supply is grounded through the earth wire at the input AC power terminal block. Use extreme caution when connecting input AC power and never apply the incorrect input power.

An external switch or circuit breaker with the following parameters must be used as means of disconnection:

a) Rated voltage not ess than maximum rated voltage of the power supply

b) Rated current not less than 150% of the power supply rated current

The switch or cirucuit breaker must be located in proximity to the power supply and within easy access of the operator. The switch or circuit breaker must be marked as disconnecting device for the equipment.

> ⚠ The Protective Earth Ground ⏚ must be connected before applying AC Line Power to the 402.

Connect the three lines of the input power to the L1, L2, L3 terminals and the earth ground to the terminal marked with the ground symbol (⏚). No neutral connection is required for the 200-240VAC configuration. For models with the 380-440VAC input configuration (340-460VAC) the neutral wire must be connected to terminal marked N. The power connections are not phase rotation sensitive, so any phase can be connected to any of the AC inputs.

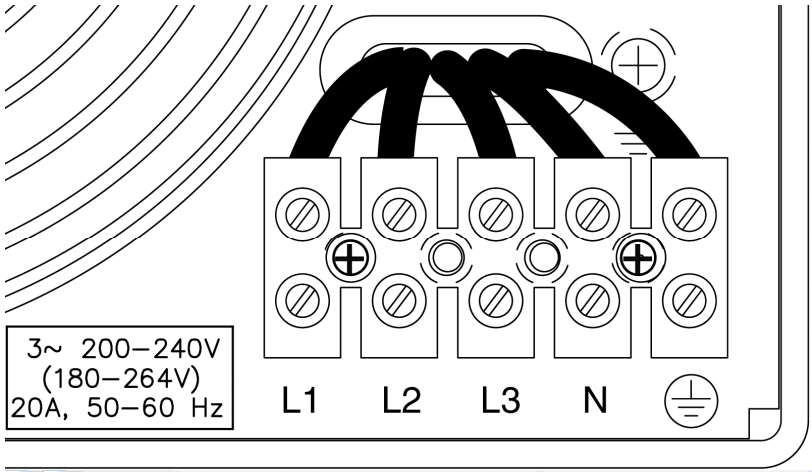

Figure 1 AC Input Terminal Block

If the power supply was purchased with the 400VAC input configuration, in addition to the three phases, the neutral wire must be connected to terminal marked N. Failure to connect the Neutral wire in a 400VAC unit may result in damage to the supply.

AC INPUT VOLTAGE	MODE	RECCOMENDED AC INPUT CABLE SIZE & RATING
200-240VAC (180-264VAC), 50-60 Hz, 3ϕ	Cap Charging	6mm^2/10 AWG, 600V
	Continuous DC	6mm^2/10 AWG, 600V
380-440VAC (340-460VAC), 50-60 Hz, 3ϕ	Cap Charging	6mm^2/10 AWG, 600V
	Continuous DC	6mm^2/10 AWG, 600V

Table 2 Recommended AC Input Cable

The AC input rating is marked on the rear terminal of the power supply. The rating is also part of the unit's model description shown in Table 1.

4.5. Connecting the High Voltage Output

> Ensure that the power supply is off and disconnected from the AC input power and that all load capacitors are discharged and shorted to ground before making any connections. Never handle the HV cable while the supply is operating. Never operate the supply without a load capacitor connected.

Before connecting the HV output cable, inspect the cable and check for signs of damage.

Always use the HV connector and cable provided with the power supply or an equivalent substitute provided by TDK-Lambda Americas. Fully insert the connector end of the HV cable and tighten the locking nut only "hand tight".

When operating above 20kV or 200Hz rep rate, silicone grease (such as Dow Corning DC-4) must be applied to the HV cable before insertion into the HV connector. The grease is used to displace air in the connector and reduce long-term corona effects. A cable greasing procedure is available for download from the TDK-Lambda Americas web site.

The load ground must be connected to the chassis ground through a separate safety ground cable with a minimum wire size of 10 AWG in addition to the HV output cable shield (see Figure 2).

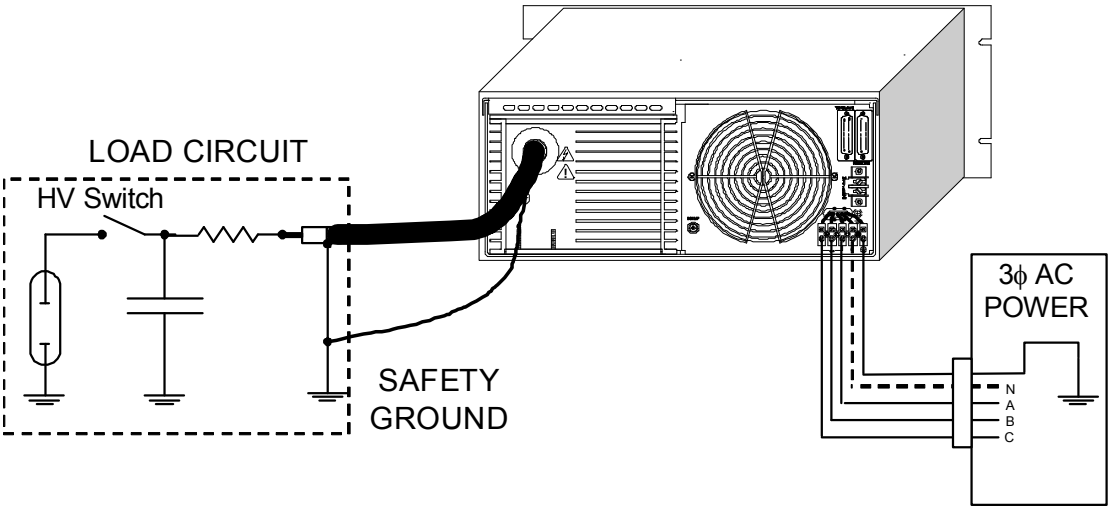

Figure 2 Typical Load Circuit Connection

Some peak current will flow out of the power supply during discharge and return through the HV return and system chassis. This current comes from voltage reversal in underdamped systems and from normal discharge of filter and cable capacitance. The path for this current should not parallel control signal returns since the resulting voltages could interfere with normal system operation.

Currents due to voltage reversal, particularly at high repetition rates can damage the power supply. Generally, a resistor in series with the HV output can be added to limit this current to an acceptable level, but an additional clamp diode may also be required.

Refer to Application Note 517 (available from the factory or at http://www.us.tdk-lambda.com/hp/product_html/high_volt.htm) for more detailed information.

Dress the high voltage cable to create a gentle curve ensuring there are no sharp bends as this will tend to reduce the cable's insulation strength. Strain relieve the load end of the high voltage cable to prevent breaking of, or damage to the center conductor. Keep the HV cables as distant as possible from the input power and the control signals.

To connect the HV cable to the load it is necessary to remove the cable jacket, shield, and any semiconducting layer (if applicable) that remains on the cable insulation after removing the shield.

The cable outer jacket should be removed to reveal the cable shield. At least 12” or 300mm of outer jacket should be removed for suitable voltage hold-off. The exposed shield should be trimmed to an appropriate length and terminated with a ground connection.

For models shipped with DS2214 HV cable (>40kV rated voltage), after the shield is removed, the black semiconducting layer is exposed. This layer should be very carefully removed using a sharp craft knife, and a peeling action. Once the semiconducting layer is removed, the exposed EPR insulation should be cleaned with IPA or an equivalent solvent. If any of the semiconducting layer remains on the HV cable insulation it may cause the cable termination to fail.

For models shipped with the DS2124 HV cable (<40kV rated voltage), there is no semiconducting layer to be removed from the cable insulation, however the exposed polythene cable insulation should be cleaned with IPA.

5. CONTROLS, INDICATORS, CONNECTORS

5.1. Front Panel Layout (L Model)

The 402L series power supply is equipped with a fully instrumented front panel featuring output voltage control, voltage and current metering, and comprehensive status LEDs, along with local/remote mode keyswitch, and power on switch. The 402L can be operated locally from the front panel or remotely via the control connector located on the rear panel (see Section 6.2). Front panel layout of the 402L power supply is shown in Figure 3 below.

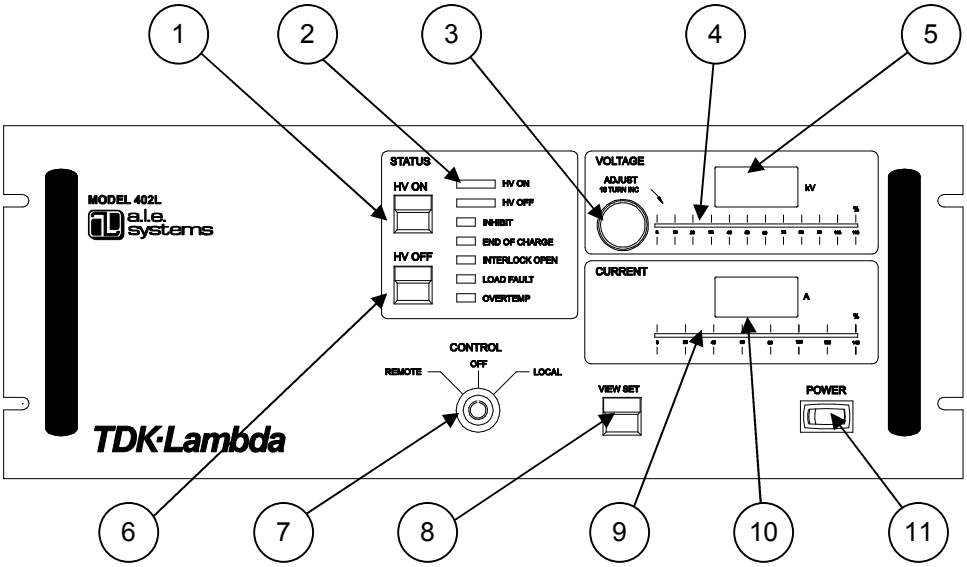

Figure 3 402L Front Panel Controls and Indicators

REF	DESCRIPTION	NOTE	SECTION
1	HV ON Push Button	Turns on HV output	5.2
2	Status LEDs	Indicates status of supply and presence of any faults	5.3
3	Local Voltage Set	10 turn pot for setting output voltage in local mode	5.4
4	Voltage bar graph	Analog bar graph showing output voltage (%)	5.5
5	Voltage Display	Digital display of output or set voltage	5.6
6	HV OFF Push Button	Turn off HV output	5.7
7	Off/Local/Remote Key	Switches control between remote, local, and off modes	5.8
8	View set push button	Push to view the output voltage set point in local mode	5.9
9	Current bar graph	Analog bar graph showing average output current (%)	5.10
10	Current Display	Digital display of average output current	5.11
11	Power switch	Turns on/off power to auxiliary circuits	5.12

Table 3 Front Panel Controls and Indicator Functions (L Model)

The front panel controls/indicators are described in detail in the following sections.

5.2. HV ON Push Button (Ref 1)

DO NOT DEPRESS THE HV ON PUSH-BUTTON UNLESS A SUITABLE CAPACITIVE LOAD IS CONNECTED TO THE POWER SUPPLY'S OUTPUT CABLE, AND THE LOAD IS CORRECTLY GROUNDED.

The HV On push button is a momentary switch that when depressed turns on HV output in local mode (keyswitch in local position) only if there are no faults present within the supply. If faults are present when the HV On button is pushed the supply **will not turn on**, and both the HV ON and HV Off LEDs will illuminate. When both the HV On and HV Off LEDS are illuminated together this indicates a Summary Fault. If the keyswitch is in the remote position the HV ON push button has no function.

5.3. Status LEDs (Ref 2)

There are 6 status LEDs on the front panel, indicating the state of the HV Output circuit and various fault detection circuits in the control system.

5.3.1. HV ON LED

The HV ON LED indicates that the HV output circuit is enabled and the supply will deliver output current if it is not inhibited by an external inhibit input. If the HV ON and HV OFF LEDs are illuminated together this indicates a Summary Fault. HV ON LED is active in local and remote modes.

5.3.2. HV OFF LED

The HV OFF LED indicates that the HV output circuit is disabled and the supply cannot deliver output current. If the HV OFF and HV ON LEDs are illuminated together this indicates a Summary Fault. HV OFF LED is active in local and remote modes.

5.3.3. Inhibit LED

If the Inhibit LED is illuminated it indicates the presence of an active inhibit signal, and the supply will not deliver charging current after the HV ON button is pushed. Inhibit is applied either via the rear panel mounted BNC connector or either inhibit input via the remote control connector. Inhibit LED is active in local and remote modes.

5.3.4. END OF CHARGE LED

The END OF CHARGE or EOC LED indicates that the load or output voltage has reached the programmed voltage. EOC LED is active in local and remote modes.

5.3.5. Interlock Open LED

The interlock open LED illuminates if the safety interlock circuit is not closed. The power supply cannot be turned on if the interlock loop is open. If the interlock loop is opened when the unit is running (ie when HV in ON), the unit will turn off with a latching fault, requiring an HV ON/OFF/ON reset cycle before it can be restarted. Interlock Open LED is active in local and remote modes.

5.3.6. Load Fault LED

The load fault LED indicates the presence of a fault in the load circuit due to a short circuit large external capacitor, or an output Overvoltage. An output Overvoltage condition will cause a latching fault requiring an HV ON/OFF/ON reset cycle before it can be restarted. Load Fault LED is active in local and remote modes.

5.3.7. Overtemp LED

The overtemp LED indicates an inverter overtemperature condition internal to the supply. The temp fault will clear once the temperature is below the fault threshold, but the unit will not restart without a reset cycle. Overtemp LED is active in local and remote modes.

5.4. Local Voltage Set (Ref 3)

The local voltage set control is an analog 10-turn potentiometer for adjusting the output voltage from zero to full rated output. This control will only operate in local mode. If the supply is operated in remote mode the local voltage set control has no effect.

5.5. Voltage bar graph (Ref 4)

The voltage bar graph is a 'quick view' analog percentage indication of the voltage measured at the power supply output. Bar graph is active in local and remote modes.

5.6. Voltage Display (Ref 5)

The Voltage Display is a 4 digit LED indicator showing the voltage measured at the power supply output. This display momentarily shows the output program voltage after the View Set button is depressed. Voltage Display is active in local and remote modes.

5.7. HV OFF Push Button (Ref 6)

The HV OFF push button is a momentary switch that when depressed turns off HV output. If the power supply shuts off with a summary fault (indicated by HV ON and HV OFF LEDs both illuminated), then this condition can be reset by pushing the HV OFF, HV ON, HV OFF button sequence. If the supply is operated in remote mode the HV OFF push button will still function.

5.8. Off/Local/Remote Keyswitch (Ref 7)

DO NOT MOVE THE KEYSWITCH POSITION FROM OFF TO LOCAL OR REMOTE UNLESS A SUITABLE CAPACITIVE LOAD IS CONNECTED TO THE POWER SUPPLY'S OUTPUT CABLE, AND THE LOAD IS CORRECTLY GROUNDED.

The Off/Local/Remote Keyswitch switches the 402L power supply operating modes between OFF, LOCAL, and REMOTE. The key can be removed in the OFF position to prevent unauthorized use. If the switch is in the LOCAL position the supply will operate from the front panel. In the remote position the supply can only be operated via the remote control interface. An L model supply can simulate an S or OEM model with the key in the remote position.

5.9. View set push button (Ref 8)

The view set push button changes the reading on the digital voltage display from the power supply output voltage, to the programmed voltage set on the local voltage set potentiometer. After pushing this button the set voltage is displayed for approximately 3 seconds.

5.10. Current bar graph (Ref 9)

The current bar graph is a 'quick view' analog percentage indication of the average current delivered by the supply. Bar graph is active in local and remote modes.

5.11. Current Display (Ref 10)

The Current Display is a 4 digit LED indicator showing the average current delivered by the power supply output. Current display is active in local and remote modes.

5.12. Power switch (Ref 11)

The power switch connects AC input power to the control circuitry and causes the internal AC contactor to close if the interlock loop is closed.

5.13. Front Panel Layout (S Model)

The 402S series power supply is equipped with a partially instrumented front panel featuring status LEDs, and a power on switch. The 402S can only be operated remotely via the control connector located on the rear panel (see Section 6.2).

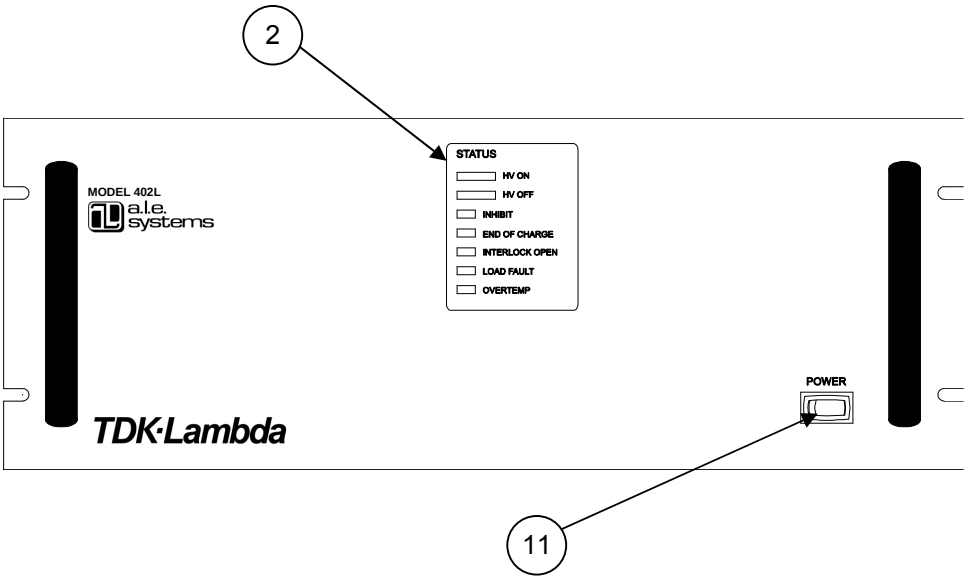

Figure 4 Front Panel Controls and Indicators (S Model)

REF	DESCRIPTION	NOTE	SECTION
2	Status LEDs	Indicates status of supply and presence of any faults	5.3
11	Power switch	Turns on/off power to auxiliary circuits	5.12

Table 4 Front Panel Controls and Indicators (S Model)

A description of the function of the LEDs and the power switch are given in sections 5.3 and 5.12 respectively.

5.14. Front Panel Layout (OEM Model)

The 402OEM front panel is completely blank and features no indicators or switches.

5.15. Rear Panel Layout (L Models)

All of the interconnect and HV connections for the 402L are located on the power supply rear panel. Figure 5 shows the rear panel layout and location of the various connectors.

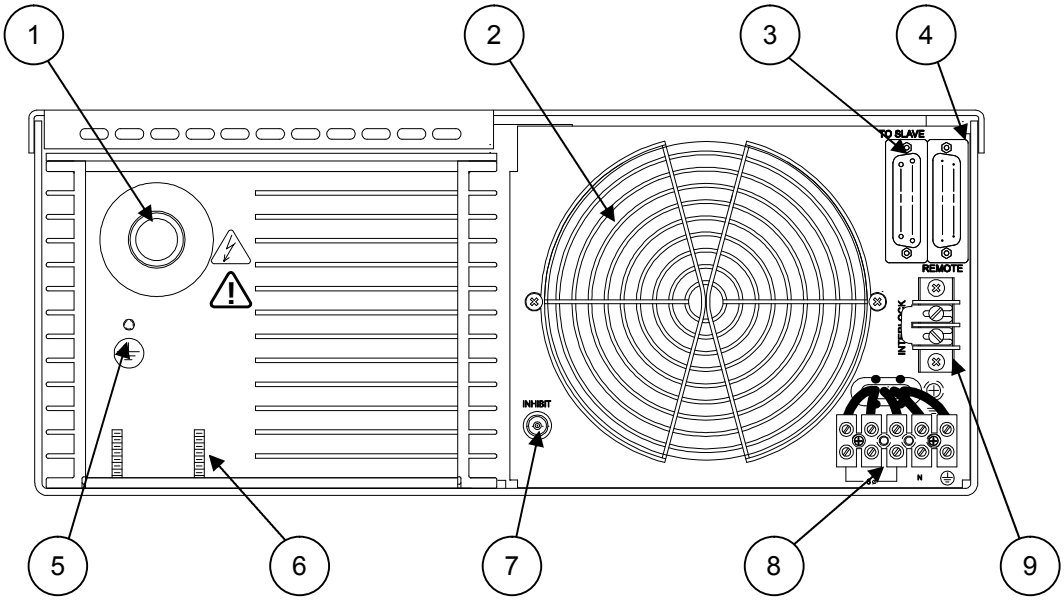

Figure 5 402L Rear Panel Connections

REF	DESCRIPTION	NOTE	SECTION
1	HV Output	HV Output connector, mates with supplied cable via proprietary connector	5.15.1
2	Cooling fan	Main AC cooling fan. Leave 4" clearance	5.15.2
3	Slave Interface	25pin male sub-D type plug for control of slave supplies in a parallel system (AMPHENOL 17BDFRA25P)	5.15.3
4	Remote Interface	25pin sub-D type receptacle for remote control of supply in remote mode (AMPHENOL 17BDFRA25S)	5.15.4
5	GND stud	10-32 UNC ground stud	5.15.5
6	GND stud	M5 ground stud (2 positions)	5.15.6
7	Inhibit input	BNC input to allow inhibit of output current	5.15.7
8	AC Input	5 position terminal block for AC input power	5.15.8
9	Interlock	Terminal for connection to interlock circuit. Contacts are isolated from ground and require dry contact closure for supply to operate.	5.15.9

Table 5 402L Rear panel Functions

The function of each item in Table 5 is described in the following sections.

5.15.1. HV Output Connector (Ref 1)

Connector socket for mating HV cable supplied with unit. The connector should be kept clean and free from debris at all times. If supply is operated at 20kV or 200Hz rep rate or above the cable should be greased to ensure corona free operation. The cable connector should only be hand tightened, never use a wrench or apply excessive force.

5.15.2. Cooling Fan (Ref 2)

Allow at least 4 inches of clearance and do not obstruct clear air flow around the fan. Air is pulled into the unit by the fan, and exhausts at the front of the side panels.

5.15.3. **Slave Connector (Ref 3)**

A 25 pin D-sub female connector that allows connection to a slave supply for increased power operation.

5.15.4. **Remote Connector (Ref 4)**

A 25 pin D-sub male connector that allows remote operation and monitoring of all power supply functions when the unit is operated in REMOTE mode.

5.15.5. **Safety Ground (Ref 5)**

10-32UNC threaded safety ground stud installed in HV tank. Should be used for additional safety ground cable between supply and load circuit.

5.15.6. **Safety Ground (Ref 6)**

M5 threaded safety ground stud installed in HV tank. Should be used for additional safety ground cable between supply and load circuit.

5.15.7. **INHIBIT BNC (Ref 7)**

The inhibit BNC input is a standard BNC socket that allows an external connection to a pulse generator or control system and gives the user control of the power supply output current. A logic 1 (10-15V) input will inhibit the supply (shuts off the output current) and a logic 0 (ground or open) allows the supply to operate.

5.15.8. **AC Input Terminal (Ref 8)**

Main AC input power terminal block see section 4.4 for further details. For 200-240VAC connect three phases and ground. For 380-440VAC option connect three phases, Neutral and Ground. AC input is not phase rotation sensitive.

5.15.9. **Interlock Terminal strip (Ref 9)**

Provides an external dry contact connection for the customer to allow interlock functions to be controlled. The interlock terminals should be connected to any safety interlock circuitry in the power supply installation. When the interlock is open the AC line contactor disconnects the AC line from the power circuitry. The power supply is shipped with a factory installed shorting link across the interlock terminals.

NOTE
The Interlock terminals are chassis referenced 24VAC circuits and should never be connected to ground.

5.16. Rear Panel Layout (S Models)

The 402S rear panel is similar to the 402L except these is no SLAVE or INHIBIT BNC connector. If a number of units are to be connected in parallel, a daisy chain type ribbon cable should be used to connect the supplies together. See section 6.4 for more details.

Note:
The numbers in Figure 6 refer to Table 5.

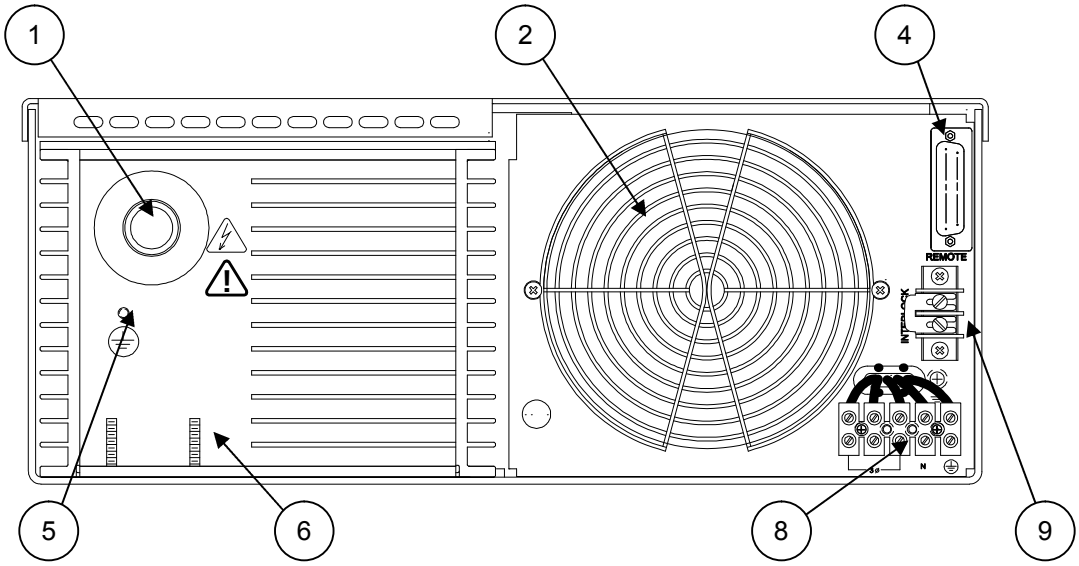

Figure 6 402S Rear Panel

5.17. Rear Panel Layout (OEM Models)

The 402OEM rear panel is similar to the 402S except there is no interlock terminal, unless the CT option is installed. If a number of units are to be connected in parallel, a daisy chain type ribbon cable should be used to connect the supplies together. See section 6.4 for more details.

Note: *The numbers in Figure 7 refer to Table 5.*

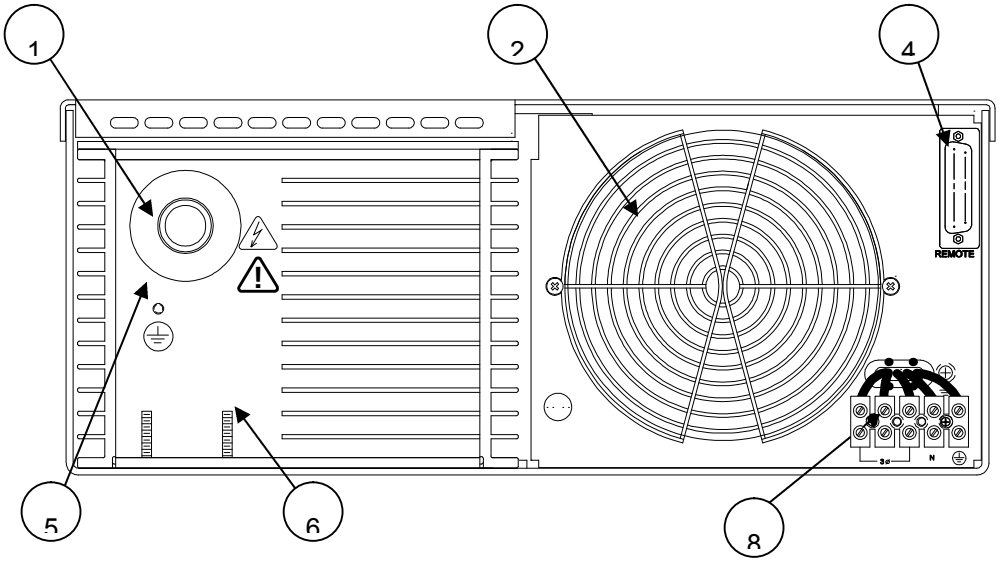

Figure 7 402OEM Rear Panel

5.18. REMOTE CONTROL CONNECTOR PIN DIAGRAM

Figure 8 shows a summary of the remote control signals on the connector labeled 4 in Figure 5 through 8. The connector is a 25-pin sub D-type receptacle (female).

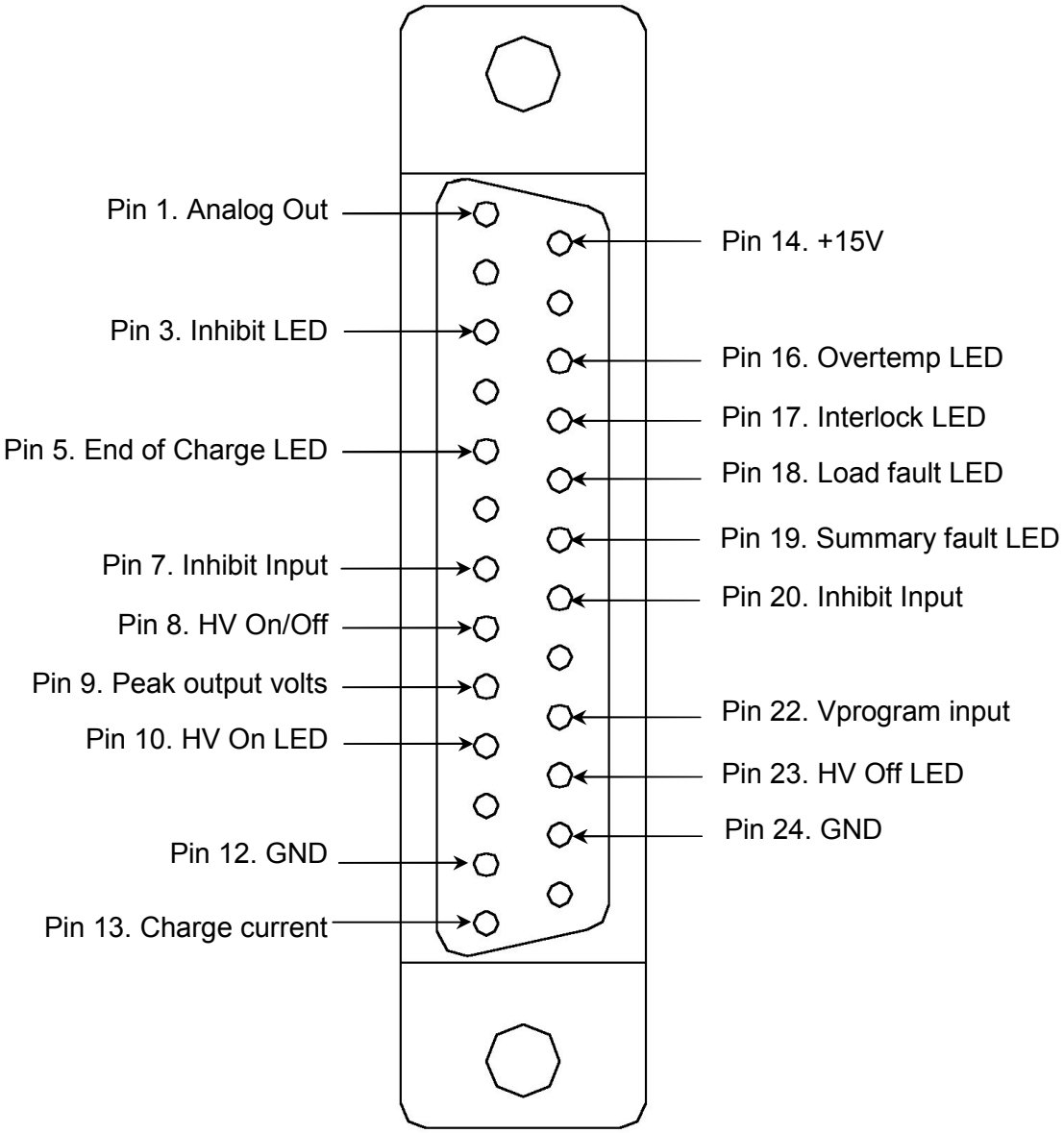

Figure 8 Remote Interface Connector and Signals.

6. OPERATING INSTRUCTIONS

The 402 power supply is designed for operation in two modes. The first mode is local, where the power supply can be controlled from the front panel. Local operation is only possible with the L model supply. The second mode is remote, where control signals are passed via the 25pin remote connector. Remote operation is possible with all 402 model power supplies (L, S, or OEM).

6.1. Local Operation (402L only)

The model 402L has full front panel instrumentation and controls for use in laboratory, prototype or OEM systems. The front panel controls include power on/off, remote/local and HV on/off switches, output voltage adjust, view set switch, digital voltage and current meters, quick reference bar graphs and status indicators. An internal AC contactor is included which is controlled by the front panel power switch and the interlock terminals located on the rear of the unit. A BNC connector is provided on the rear panel for easily connecting a pulsed INHIBIT signal when operating from the front panel. The model 402L can be operated as a "master" unit in parallel with several model 402S or OEM "slave" units for increased output power. Refer to Section 6.4 "Paralleling Units".

Before operating the power supply ensure a load capacitor is connected between the power supply output, and the other terminal of the capacitor is connected to ground or the appropriate point in the load circuit. Failure to correctly connect a capacitive load prior to operating the power supply may result in damage.

HIGH VOLTAGES MAY POTENTIALLY EXIST FROM THIS POINT FORWARD.

The power supply should be connected to 3 phase AC power as described in section 4.4. The interlock terminals should be closed either with the supplied shorting link or by an isolated external dry contact. Follow the steps below;

1. Ensure the output voltage potentiometer is turned fully counter clockwise.
2. Turn on the AC power switch, the cooling fan should start and the front panel indicators will illuminate.
3. Turn the control key to the local position.
4. Push the View Set button and turn the Voltage potentiometer until the required load voltage is displayed. The view set mode stays active for approximately 3 seconds before the voltage display reverts to the output voltage mode.
5. Push the HV ON button. The load will charge to the preset voltage and once this voltage is reached the End of Charge LED will illuminate. The supply will maintain this voltage until the HV OFF button is pushed, or the load capacitor is discharged via the HV switch.

After the load has been discharged the external Inhibit function can be used to shut down the power supply output current which aids in the HV switch recovery. Application of an inhibit signal will typically shut down the output current in approximately 15microseconds.

To turn OFF the power supply depress the HV OFF button, or use the Inhibit input to shut off the output current but leave the supply in the HV ON condition. Opening the interlock terminals will also cause the power supply to turn off. In this case the unit can only be turned back on after the interlock has been closed and the HAV ON button depressed followed by the HV OFF button to RESET the fault. Any other fault occurring in the internal protection circuitry will interrupt the power supply's operation causing it to turn OFF. For a full explanation of each control and indicator refer to Section 5.

6.2. Remote Operation (All models)

All 402 models are easily controlled through the 25 pin sub D-type remote interface connector located on the rear panel. The minimum required signals for remote control operation are; HV ON/OFF, Vprogram and GND. The remaining signals are provided for status monitoring and fault diagnosis, or more sophisticated control methodologies. The function each signal is shown in Table 6, with a schematic showing a suggested remote interface circuit shown in Figure 9**Error! Reference source not found.**.

Pin	Signal Name	I/O	Description
1	Analog Out	O	0-10V (±1%) Analog of output voltage waveform. Impedance 1kΩ. If the 5V option is installed the voltage level is 0-5V.
3	Inhibit LED	O	Open collector through 100Ω. Low impedance when inhibit signal applied.
5	End of Charge LED	O	Open collector through 100Ω. Low impedance when power supply reaches End of Charge.
7	Inhibit Input	I	5-15V Inhibits unit, open or ground allows operation. Input impedance >10kΩ
8	HV ON/OFF	I	15V=On, ground or open =Off. Also used to reset latching faults by cycling from On to Off. Input impedance >1MΩ. If the EN option is installed 15V=Off, Ground or open = On
9	Peak output volts	O	0-10V (±1%) Peak detector of output voltage waveform. Can be used to drive a meter displaying peak charging voltage. Impedance 10k kΩ. If the 5V option is installed the voltage level is 0-5V.
10	HV ON LED	O	Open collector through 100□Ω. Low impedance when HV output is enabled.
12	GND		Control circuit return. Also chassis/earth ground.
13	Charge current	O	Uncalibrated Analog of output current waveform. Impedance 10kΩ
14	+15V	O	+15V through 100 kΩ
16	Overtemp LED	O	Open collector through 100Ω. Low impedance when inverter overtemperature condition occurs.
17	Interlock LED	O	Open collector through 100Ω. Low impedance when external interlock circuit is open.
18	Load fault LED	O	Open collector through 100Ω. Low impedance when load fault condition occurs. Load fault is normally a non-latching fault and will self reset after approximately 500ms (for models without LP option), unless caused by an output overvoltage where the supply will latch off.
19	Summary Fault LED	O	Open collector through 100Ω. Low impedance indicated a summary fault condition. Summary fault is a logical or of Overvoltage, Overtemp, AC Line, and Open Interlock conditions.
20	$\overline{\text{Inhibit Input}}$	I	0V Inhibits unit, 15V or open allows operation. Input impedance >10 kΩ
22	Vprogram	I	0-10V = 0-100% of rated output voltage. Input impedance >1MΩ. If the 5V option is installed the voltage level is 0-5V.
23	HV OFF LED	O	Open collector through 100Ω. Low impedance when HV output is off/disabled.
24	GND		Control circuit return. Also chassis/earth ground.

Table 6 402 Remote Interface Description

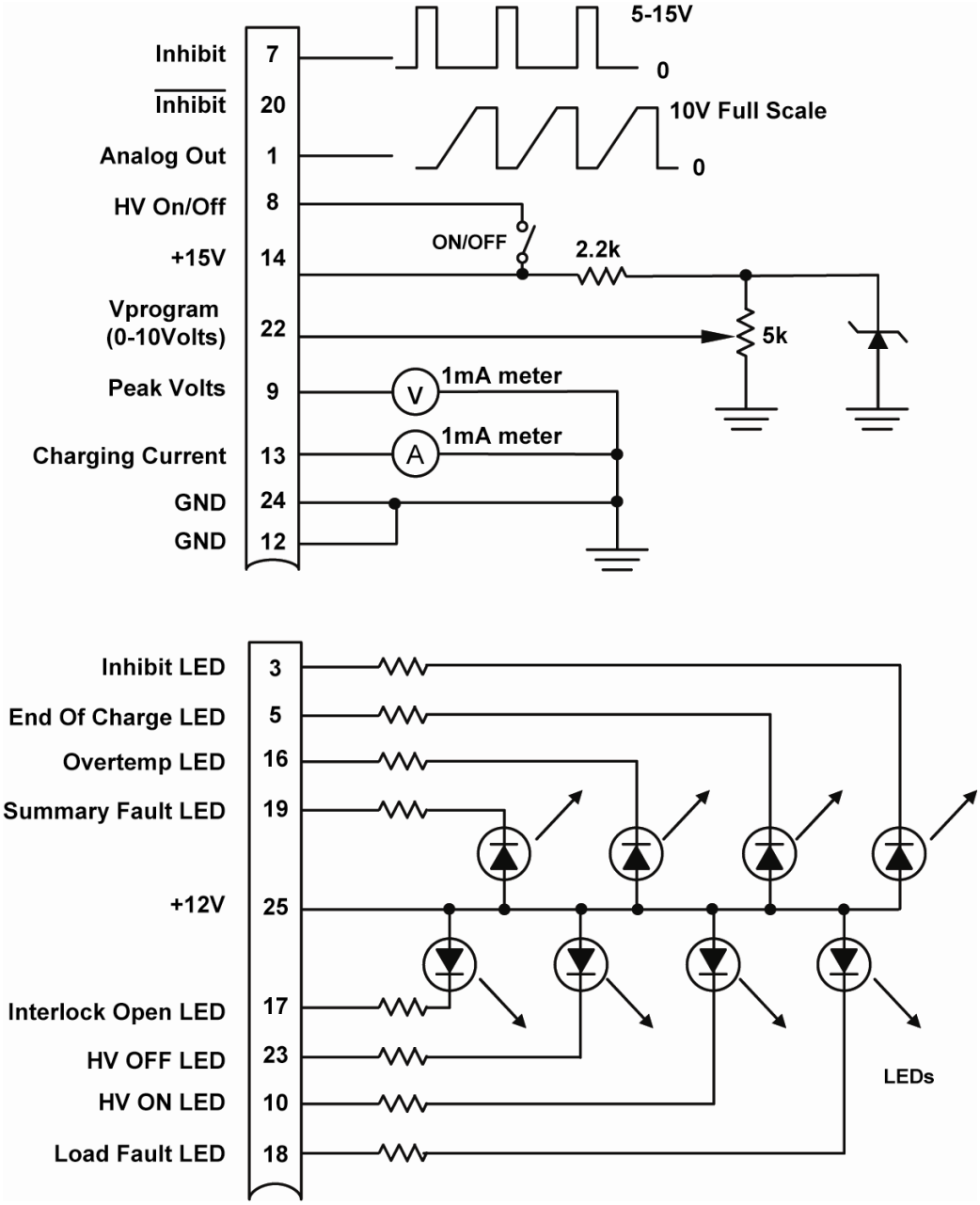

Figure 9 Suggested external remote interface circuit.

A detailed description of each remote control signal is given in the following sub-sections.

6.2.1. Analog Out

Pin 1. Analog of output voltage waveform as measured at the output terminals of the power supply. Signal is 0-10V +/-1% (0-5V if 5V option installed).

6.2.2. Inhibit LED

Pin 3. Open collector Active Low output indicating presence of an external Inhibit signal. Max rated voltage - 60V, 100Ω series resistance.

6.2.3. End Of Charge (EOC) LED

Pin 5. Open collector Active Low output indicating power supply output voltage has reached the programmed voltage or end of charge cycle. Max rated voltage - 60V, 100Ω series resistance.

6.2.4. Inhibit Input

Pin 7. 5-15V Inhibits unit (shuts off output current), open or ground allows operation. Input impedance >10kΩ. Signal can be used to aid load switch recovery.

6.2.5. HV ON/OFF

Pin 8. +15V = HV ON, ground or open = HV OFF. Also used to reset latching faults by cycling from ON to OFF. Input impedance > 1MΩ. If EN option is installed +15V = OFF, Open or Ground = ON.

6.2.6. Peak Output Volts

Pin 9. Peak detector of Analog output voltage waveform. Can be used to drive a meter displaying peak charging voltage. Signal is 0-10V +/-1% (0-5V if 5V option installed).

6.2.7. HV ON LED

Pin 10. Open collector Active Low output indicating power supply output is ON/Enabled. Max rated voltage - 60V, 100Ω series resistance. If both the HV ON and HV OFF signals are both active at the same time, this indicates a Summary Fault.

6.2.8. Ground

Pin 12. Control circuit return. Also chassis/earth ground.

6.2.9. Charge current

Pin 13. Analog of output current waveform. Signal is not calibrated.

6.2.10. +15V Output

Pin 14. +15V through 100Ω, maximum current is 20mA.

6.2.11. Overtemp LED

Pin 16. Open collector Active Low output indicating an inverter overtemperature condition has occurred. Once temperature has returned to normal levels this fault will clear, but the power supply will not restart without a Reset Cycle. Max rated voltage - 60V, 100Ω series resistance.

6.2.12. Interlock LED

Pin 17. Open collector Active Low output indicating the external interlock circuit is open. Max rated voltage - 60V, 100Ω series resistance.

6.2.13. Load Fault LED

Pin 18. Open collector Active Low output indicating a load fault condition. Load fault is a non-latching fault and will self reset after approximately 500ms (for models without LP option). Load fault is caused by an output overvoltage condition (110% of rated voltage) or an output short circuit/large capacitor (load charges for 500ms without reaching programmed voltage). Max rated voltage - 60V, 100Ω series resistance.

6.2.14. Summary Fault LED

Pin 19. Open collector Active Low output indicating a summary fault condition. Summary fault is a logical OR of Overvoltage, Overtemp, AC Line, and Open Interlock conditions. Summary Fault is also indicated by both HV ON and HV OFF LEDs/indicators illuminating at the same time. Max rated voltage - 60V, 100Ω series resistance.

6.2.15. Not Inhibit Input

Pin 20. Logical Inverse of Inhibit input (Pin 7), 0V Inhibits unit, 15V or open allows operation. User should control supply with either the Inhibit or Not Inhibit signal, both signals should not be used together. Input impedance >10kΩ.

6.2.16. Vprogram

Pin 22. 0-10V Analog Input = 0-100% of rated output voltage (0-5V if 5V option is installed). Input impedance >1MΩ.

6.2.17. HV Off LED

Pin 23. Open collector Active Low output indicating HV output is off/disabled. Max rated voltage - 60V, 100Ω series resistance.

6.2.18. Ground

Pin 24. Control circuit return. Also chassis/earth ground.

6.3. Remote Control Sequence

Note

The logic levels in the description below are for a supply without EN option. If EN is installed the logic levels for HV ON/OFF should be reversed.

Before operating either a 402L, S, or OEM in remote mode it must first be connected to a master supply, or an appropriate external control system. To operate a model 402L in remote mode the front panel keyswitch must be in the REMOTE position.

It is suggested that the INHIBIT signal is used in addition HV ON/OFF signal to control the output current of the power supply during the normal charge/discharge cycle. The INHIBIT signal should be asserted (Pin 7=5-15V) prior to activating the HV ON signal.

Once HV ON has been set (Pin 8=15V), then INHIBIT can be removed (Pin 7=0V), and the supply will begin charging the load. A few tens of microseconds before the load switch is triggered to close, the INHIBIT signal should be asserted to turn-off the output current, and aid in switch recovery.

After the load is discharged, and the HV switch has recovered to an insulating state, INHIBIT can be removed and the load re-charged. A typical set of remote control waveforms illustrating this sequence is shown in Figure 10.

There is no need to turn HV ON and OFF during the normal charge discharge cycle, just use the INHIBIT signal to control the power supply. HV should be turned off (Pin 8=0V) as soon as the load circuit is no longer required to operate.

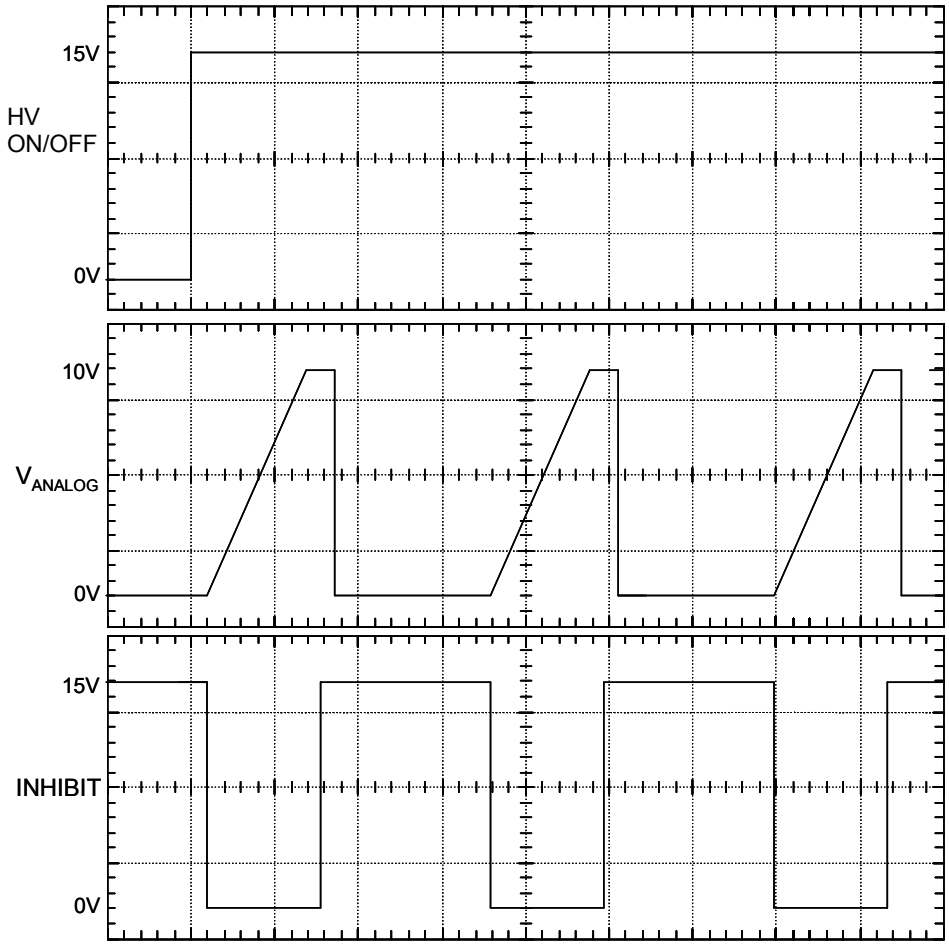

Figure 10 Typical remote Interface waveforms

The 402 supply can also be controlled without using the Inhibit signal (leaving Pin 7or 20 unconnected), and in this case the output current is immediately turned ON when the HV ON signal is activated assuming there are no faults present.

6.4. Parallel Operation

The 402 series capacitor charging power supplies are constant current sources, and can simply be connected in parallel for applications requiring increased power. Parallel supplies should have the same output voltage rating and programming options (if one unit has the 5V option, all others in parallel must have this option). Note that it is also possible to operate power supplies in parallel from different series (ie a model 402 in parallel with a model 802), but the user has to ensure the remote interface connections are compatible.

To operate more than one unit in parallel all that is required is a parallel control cable, and to connect the HV output cables together at the load. The output currents from the parallel supplies simply add together to increase the overall system current. Any model 402 supply, or any combination of units can be operated in parallel. If at least one model 402L is connected in a parallel system then the system can be operated without an external controller by using the 402L as a master supply in local mode.

If status, voltage, and current displays/measurements are required individually for each supply in a parallel system then the ‘daisy chain’ control cable is not appropriate, and each unit must be individually connected to a remote control system.

6.4.1. Parallel system comprising 402L supplies

If all of the parallel units are L model supplies then one unit should be operated as the master supply in either local or remote mode. The other parallel supplies can be connected to the SLAVE 25-pin D-sub connector on the master unit rear panel (refer to Figure 11). The SLAVE control cable can be a pin-to-pin ribbon or other cable that is ‘daisy chained’ to the REMOTE connector on each of the SLAVE supplies. Note: The master 402L supply in a parallel system only displays the status, voltage, and current output for that unit, not for the entire system. The slave supplies will also display the voltage and current only for that specific unit.

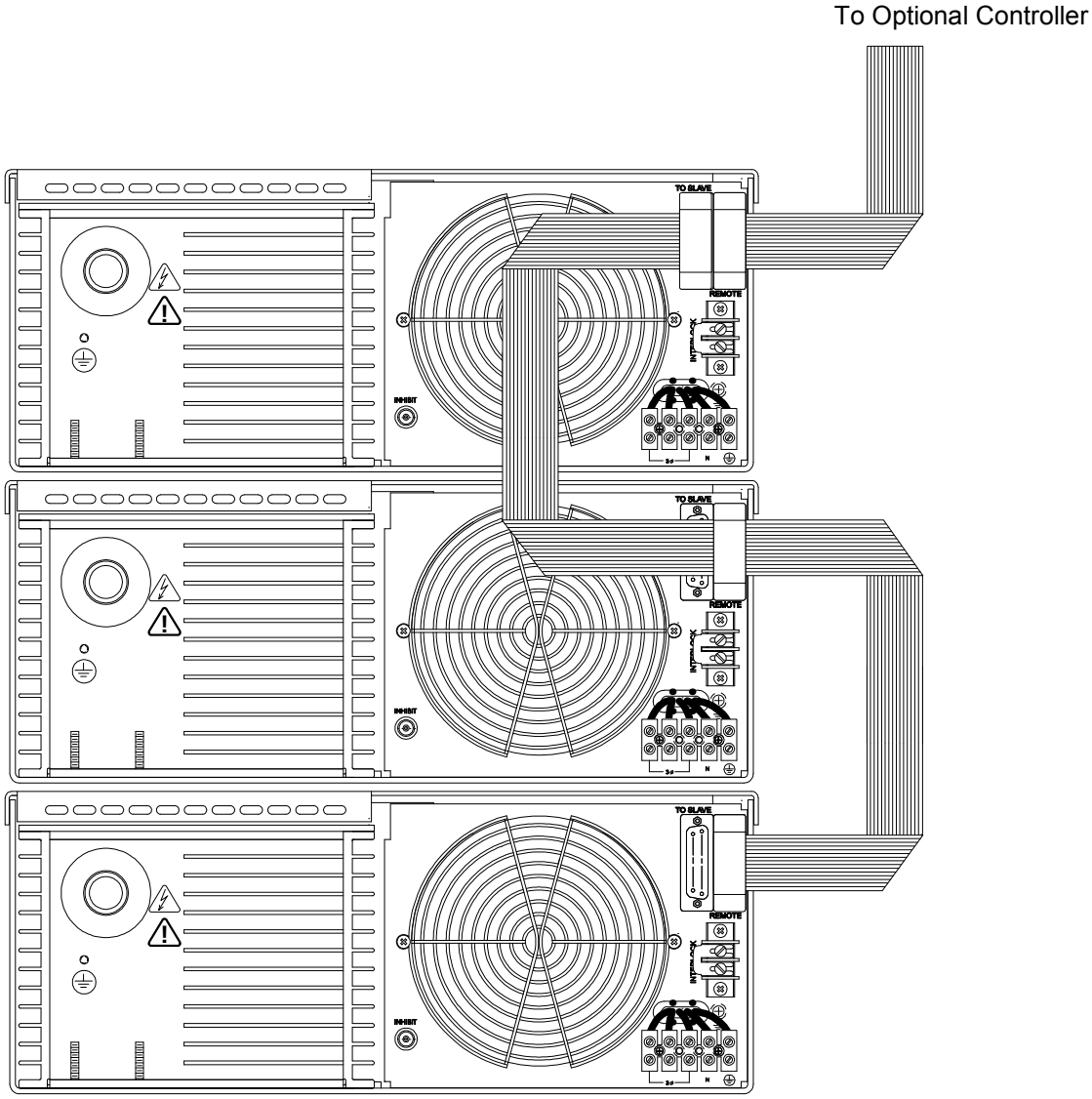

Figure 11 402L Parallel System Control Connections.

6.4.2. Parallel system comprising both 402L and 402S or OEM supplies

For a system comprising both 402L and S/OEM units, a single L model should be operated as a master in either local or remote mode. The other parallel supplies can be connected to the SLAVE 25-pin D-sub connector on the master unit rear panel (refer to Figure 12). The SLAVE control cable can be a pin-to-pin ribbon or other cable that is ‘daisy chained’ to the REMOTE connector on each of the SLAVE supplies.

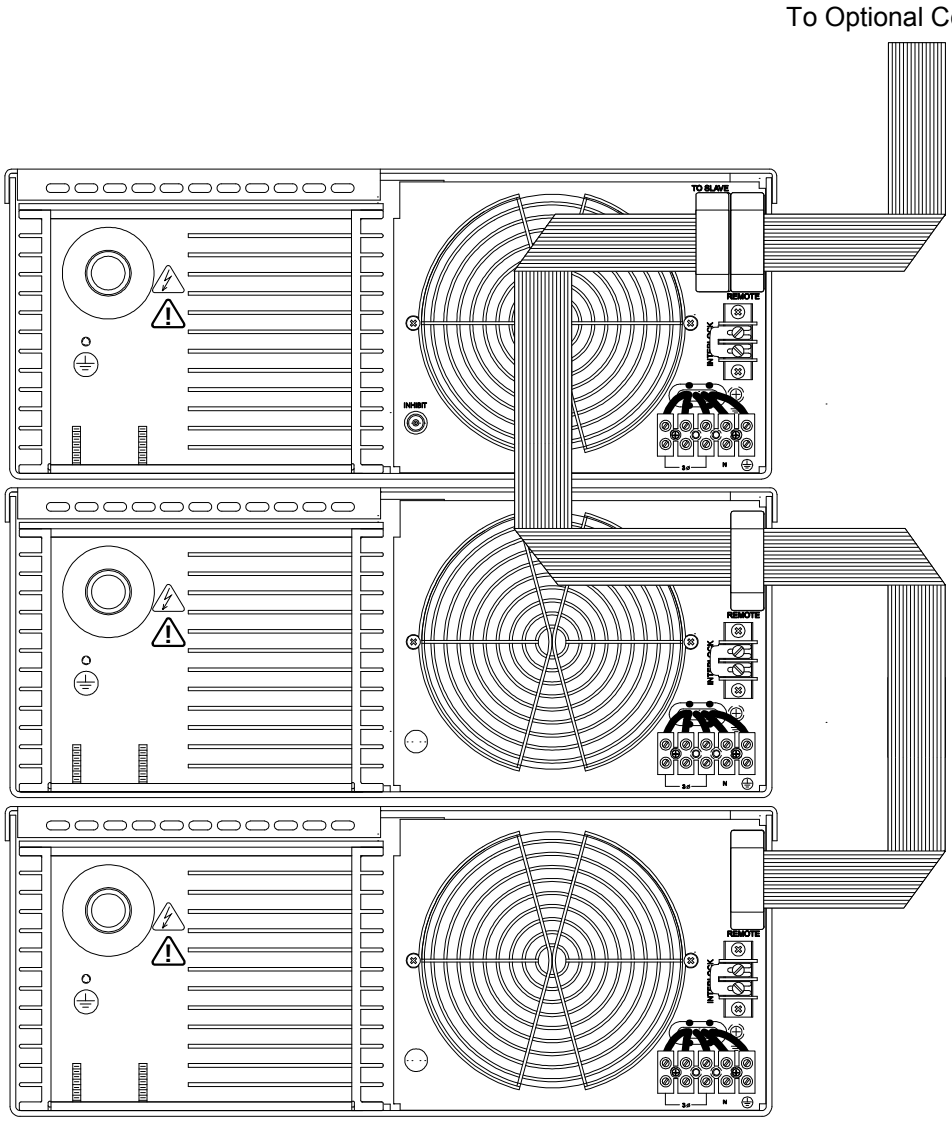

Figure 12 402L and 402S/OEM Parallel System control Connections.

6.4.3. Parallel system comprising 402S/OEM supplies

A system comprising only model 402S/OEM supplies must be operated from an external control system. The control system should be connected using a pin-to-pin ribbon or other cable that is ‘daisy chained’ to the REMOTE connector on each of the 402S/OEM supplies in the system. A sketch is shown in Figure 13.

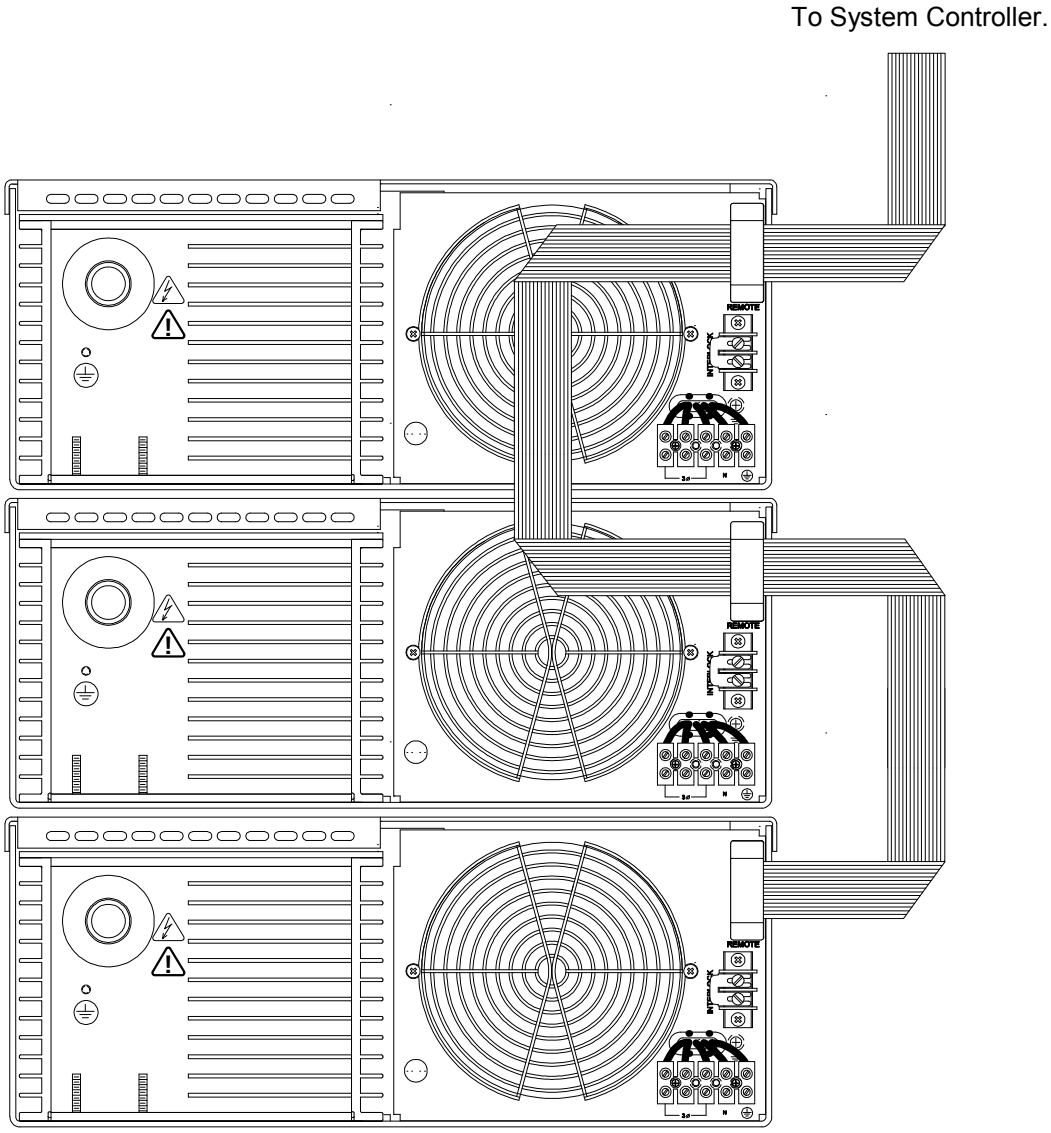

Figure 13 Parallel Operation Connections for 402S/OEM Supplies

Notes

7. APPLICATION NOTES

The 402 series power supplies are high voltage power sources and great care should be taken when connecting and operating these units. In order to aid installation and system design, a number of application notes have been produced to support the design engineer with certain load circuit component rating and selection. The latest versions of these application notes are available for download at the TDK-Lambda High Power web site (http://www.us.tdk-lambda.com/hp/product_html/high_volt.htm).

The following App Notes were available at the time this manual was produced. These documents are continually being improved and expanded, so always check for the latest revision on-line.

APP Note 500: Calculating Capacitor Charge Time

APP Note 502: Calculating AC Line Currents

APP Note 505: Charging units as Continuous Output DC Supplies

APP Note 507: Charging Large Load Capacitors

APP Note 509: What is Regulation and Repeatability?

APP Note 513: Power Factor Correction

APP Note 517: Protection Against Voltage Reversal

If there are any other application issues or questions that are not covered in these Application Notes, or elsewhere in this manual, please do not hesitate to contact the factory and our team of experienced HV application engineers.

Contact the Factory – We are here to help!

Tel: +1 732 922 9300 x229

Fax: +1 732 922 1441

THIS IS A COMPUTER GENERATED DWG.
NO MANUAL REVISIONS ARE PERMITTED.

APPLICATION			LTR	E.C.O. NO.	BY	APP.
USED ON	NEXT ASSY.	QTY.	00	INITIAL RELEASE 7/6/94	SAdB	
			A	TG 3 REL. 10/18/95	CJS	

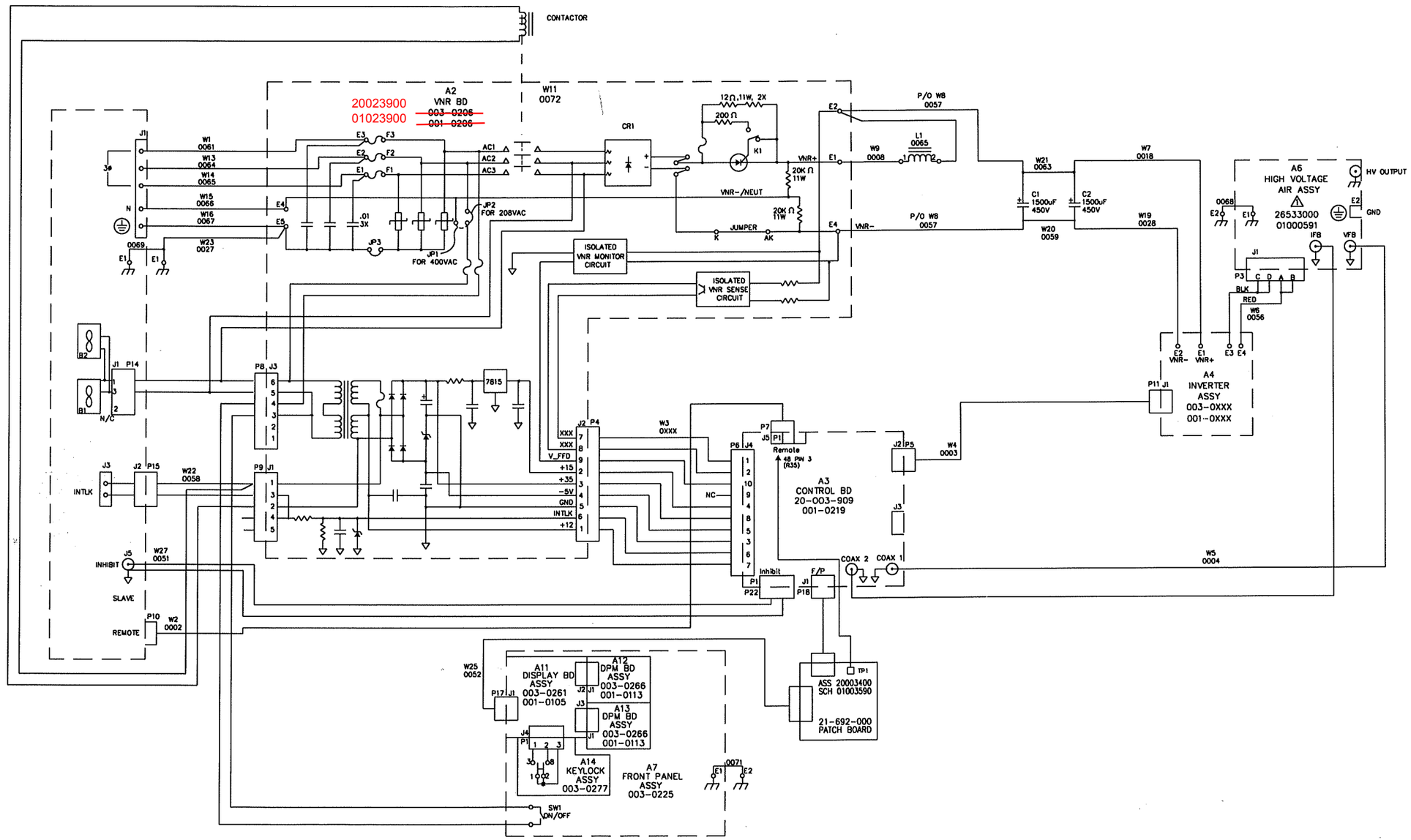

REFERENCE DESIGNATIONS	
HIGHEST	NOT USED
S1	
M1	
C2	
L2	
A14	A8
P22	
W27	W12,17,18,24
E2	

SHEET ___ OF ___

ELECTRONIC MEASUREMENTS, INC.

TITLE: SCHEMATIC
402L 208V AC 1064

DWG NO. 01-487-002 REV. A

SCALE: NONE

P/L: 487

DRAWN: SAdB 7/26/94

THIS IS A COMPUTER GENERATED DWG.
NO MANUAL REVISIONS ARE PERMITTED.

APPLICATION			LTR	E.C.O. NO.		BY	APP.
USED ON	NEXT ASSY.	QTY.	00	REL.ECO# 320	4/91	JT	
402-OEM LV AC	003-0273		01	ECO# 378	5/91	JT	
			A	TG 3 REL	12/15/94	CJS	
			B	ECO #16288	6/23/97	CJS	

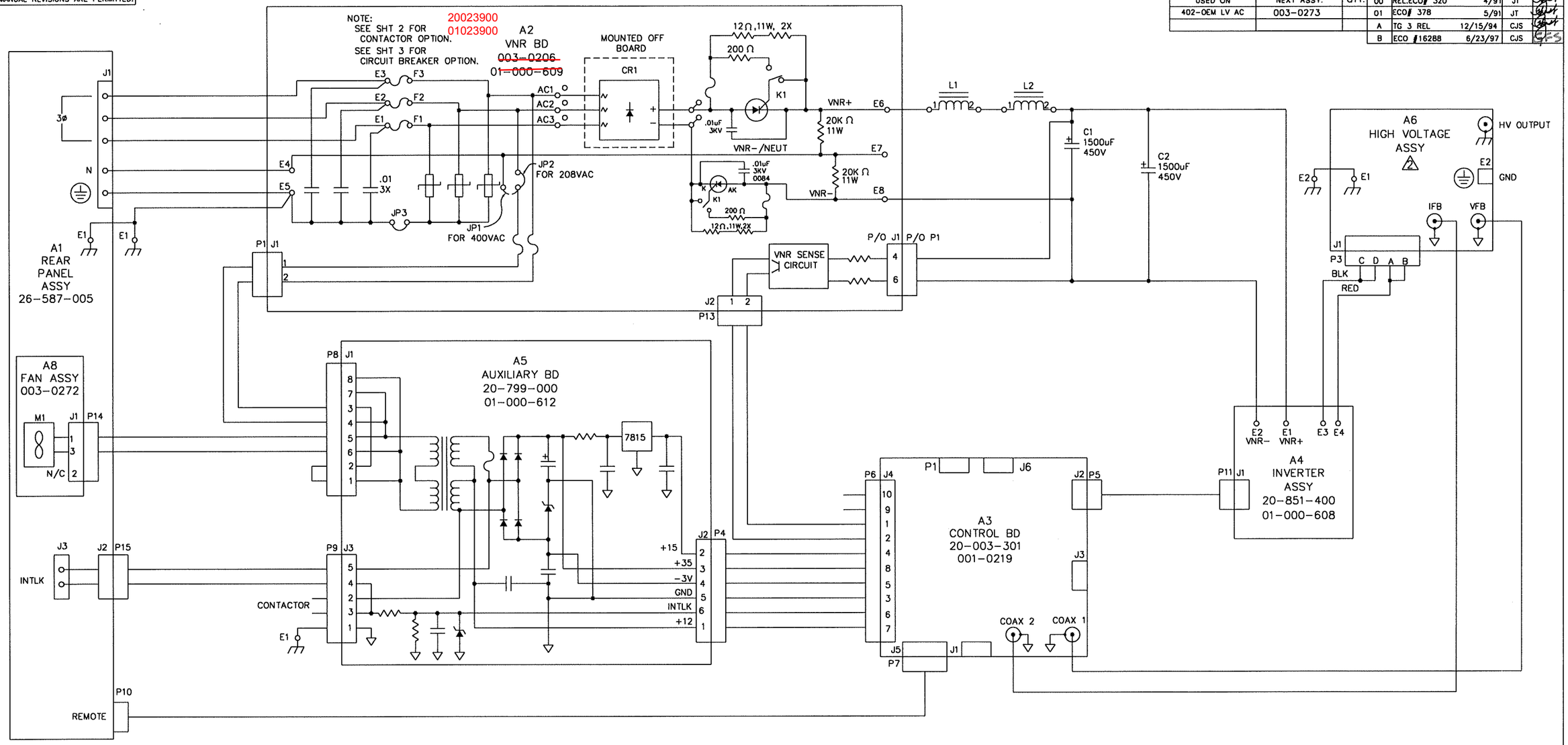

NOTES:

1. WIRES W1,13, AND 14 ARE NOT USED ON OPTION 2 ONLY. WIRE W11 IS USED ONLY ON OPTION 1 AND 2.

2. SEE FAMILY TREE (004-0018).

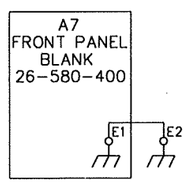

REFERENCE DESIGNATIONS	
HIGHEST	NOT USED
S1	
M1	
C2	
L2	
A8	
P16	P2
W23	W1,11-14,17,18
E2	

SHEET 1 OF 3

MTL: N/A	TOL: .X = ± .02" .XX = ± .01" .XXX = ± .005" FRAC. = ± 1/64" ANGLES = ± 1/2°	REL. TO MFG. DWN. DATE: 12/15/94 MFG. DATE: 12/15/94	ENG. CTL. DWN. J TURCOTTE DATE: 7/90 CHK. B.WEAVER DATE: 10/90	ELECTRONIC MEASUREMENTS, INC.
FIN: N/A	P/L: 487 SCALE: N/A	DOC. REL. DATE: 12/15/94 DO NOT SCALE DWG.	APP. DATE: 12/15/94	TITLE: SCHEMATIC 402-OEM 200V AC SYSTEM DWG. NO. 01-487-003 REV. B

THIS IS A COMPUTER GENERATED DWG.
NO MANUAL REVISIONS ARE PERMITTED.

APPLICATION			LTR	E.C.O. NO.	BY	APP.
USED ON	NEXT ASSY.	QTY.		SEE SHEET 1		

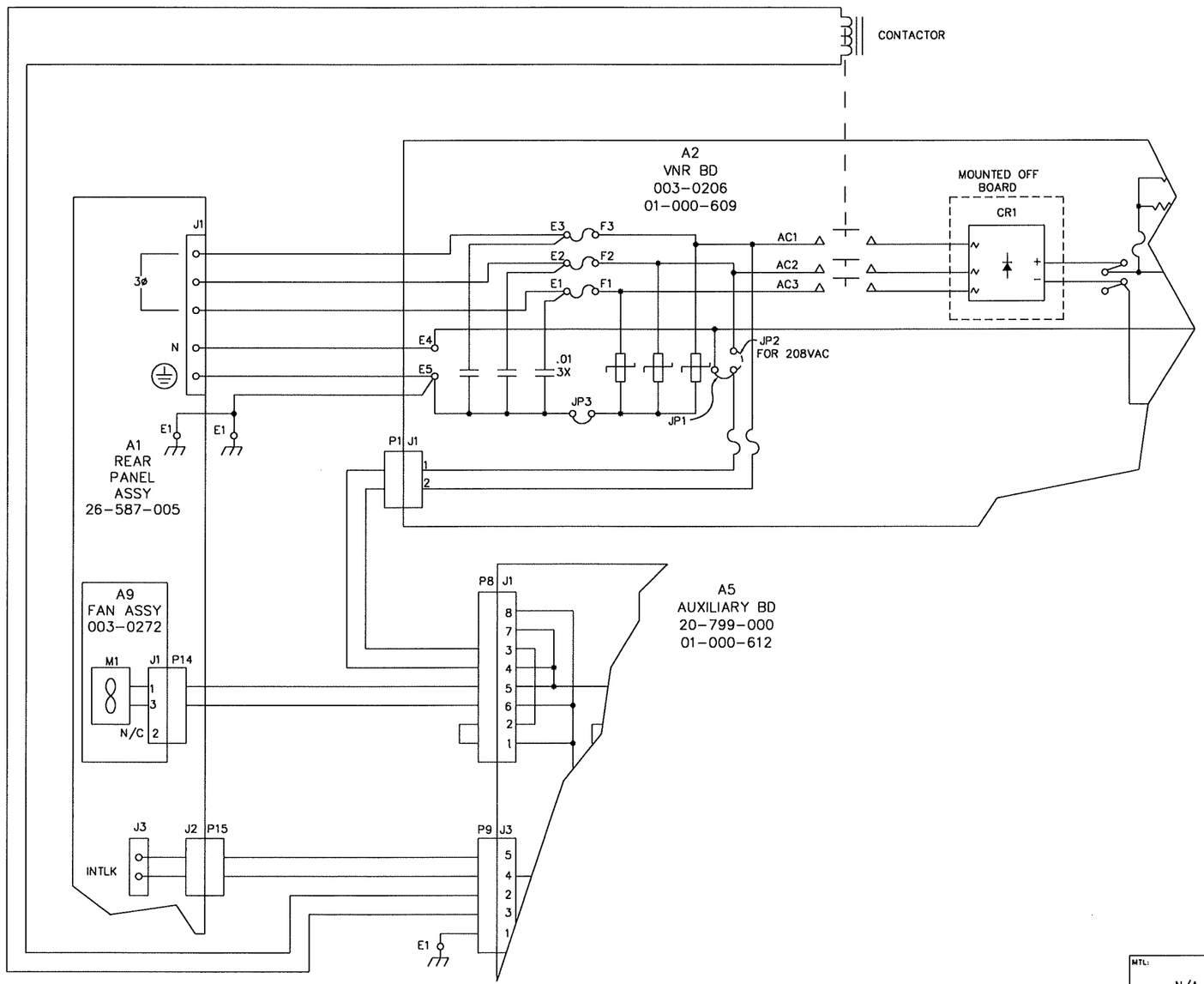

OPTION 1

402 OEM VERSION WITH CONTACTOR

SHEET 2 OF 3

MTL: N/A	TOL: .X = ± .02" .XX = ± .01" .XXX = ± .005" FRAC. = ± 1/64" ANGLES = ± 1/2°	REL. TO MFG. PRJ. ENG. DATE:	ENG. CTL. DWN. DATE: J TURCOTTE 7/90	ELECTRONIC MEASUREMENTS, INC.	
		MFG: DATE:	CHK: DATE:	TITLE: SCHEMATIC 402-OEM 200V AC SYSTEM	
FIN: N/A	P/L: 487	DOC. REL. DATE:	ENG: DATE:		
	SCALE: N/A	DO NOT SCALE DWG.	APP. DATE:	DWG. NO. 01-487-003	REV. B

THIS IS A COMPUTER GENERATED DWG.
NO MANUAL REVISIONS ARE PERMITTED.

APPLICATION			LTR	E.C.O. NO.	BY	APP.
USED ON	NEXT ASSY.	QTY.		SEE SHEET 1		

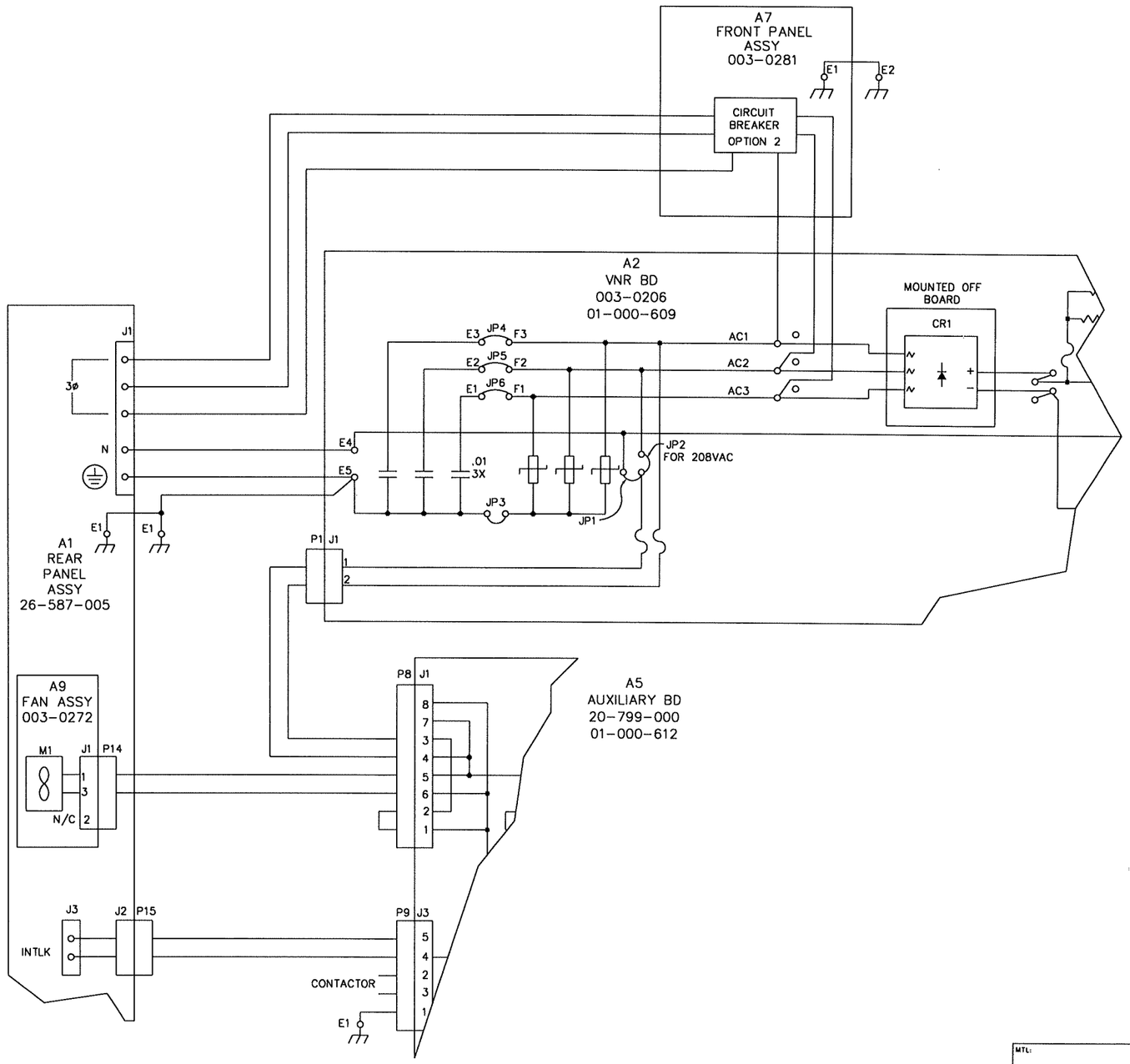

OPTION 2

402 OEM VERSION WITH CIRCUIT BREAKER
AND WITHOUT FUSES.

SHEET 3 OF 3

MTL: N/A	TOL: .X = ± .02" .XX = ± .01" .XXX = ± .005" FRAC. = ± 1/64" ANGLES = ± 1/2°	REL. TO MFG. PRJ. ENG. DATE:	ENG. CTL. DWN: B. WEAVER DATE: 12/90	ELECTRONIC MEASUREMENTS, INC.
		MFG: DATE:	CHK: DATE:	TITLE: SCHEMATIC 402-OEM 200VAC SYSTEM
FIN: N/A	P/L: 487	DOC. REL. DATE:	ENG: DATE:	
	SCALE: N/A	DO NOT SCALE DWG.	APP: DATE:	DWG. NO. 01-487-003 REV. B

THIS IS A COMPUTER GENERATED DWG.
NO MANUAL REVISIONS ARE PERMITTED.

APPLICATION			LTR	E.C.O. NO.	BY	APP.
USED ON	NEXT ASSY.	QTY.	1	INITIAL REL. 7/13/95	CH	
402-OEM LV AC	003-0273		A	TG 3 REL. 3/12/96	CJS	

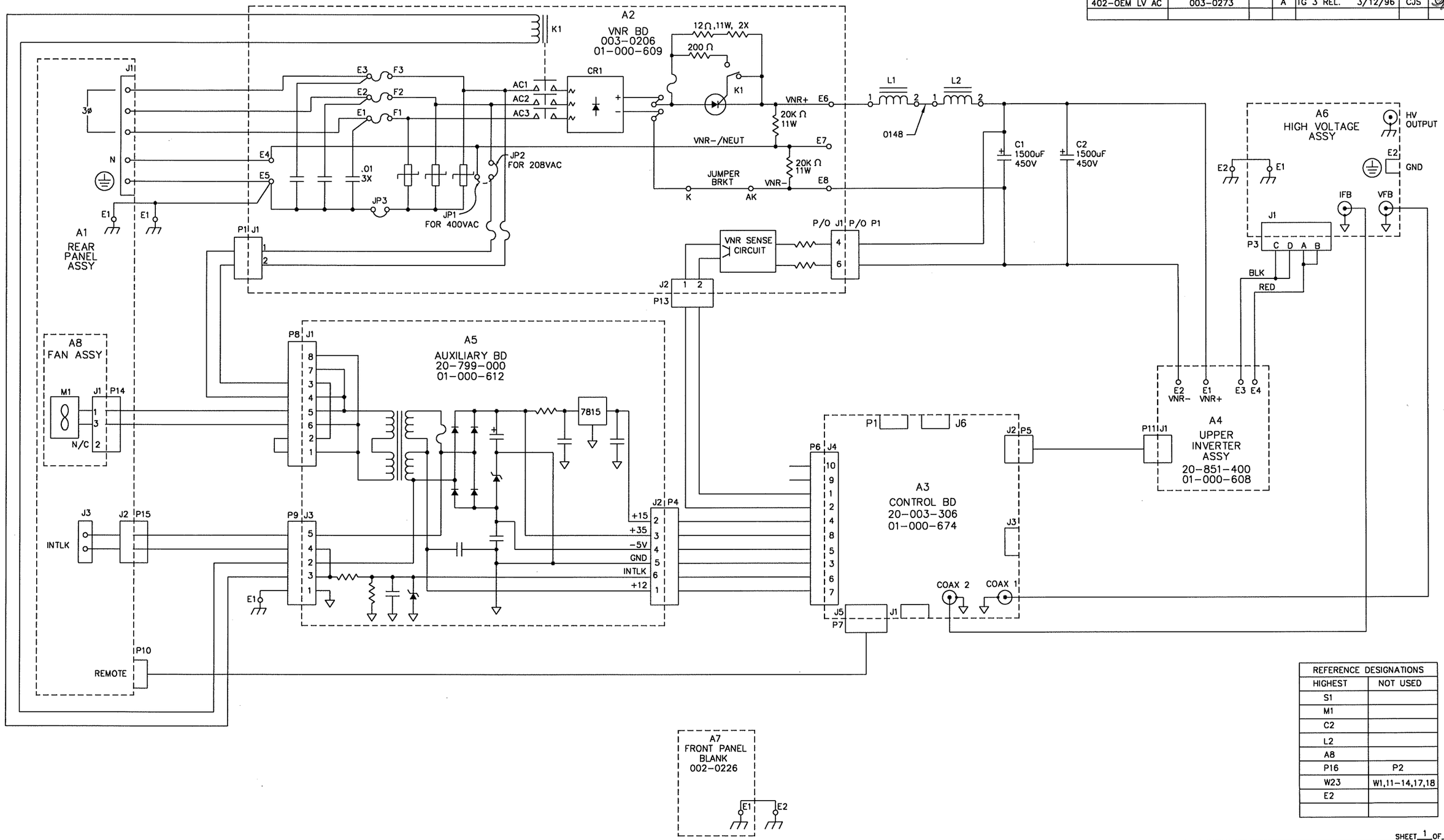

REFERENCE DESIGNATIONS	
HIGHEST	NOT USED
S1	
M1	
C2	
L2	
A8	
P16	P2
W23	W1,11-14,17,18
E2	

SHEET 1 OF 1

MTL: N/A	TOL: .X = ± .02" .XX = ± .01" .XXX = ± .005" FRAC. = ± 1/64 ANGLES = ± 1/2°	REL. TO MFG. PRJ. ENG. DATE: MFG. DATE:	ENG. CTL. DWN: C.SEIBERT DATE: 3/12/96 CHK. DATE: 8/13/95	ELECTRONIC MEASUREMENTS, INC.
FIN: N/A	P/L: 487 SCALE: NONE	DOC. REL. DATE: DO NOT SCALE DWG.	ENG. DATE: 8/13/95 APP. DATE: 8/13/95	TITLE: SCHEMATIC 402-OEM-DC 208V AC SYSTEM-1151 DWG. NO. 01-487-008 REV. A

THIS IS A COMPUTER GENERATED DWG.
NO MANUAL REVISIONS ARE PERMITTED.

APPLICATION			LTR	E.C.O. NO.		BY	APP.
USED ON	NEXT ASSY.	QTY.	1	INITIAL REL.	2/3/96	SE	
FINAL	802 L	REF.	A	TO 3 REL.	3/15/96	CJS	
			B	ECO #16286	6/11/97	CJS	

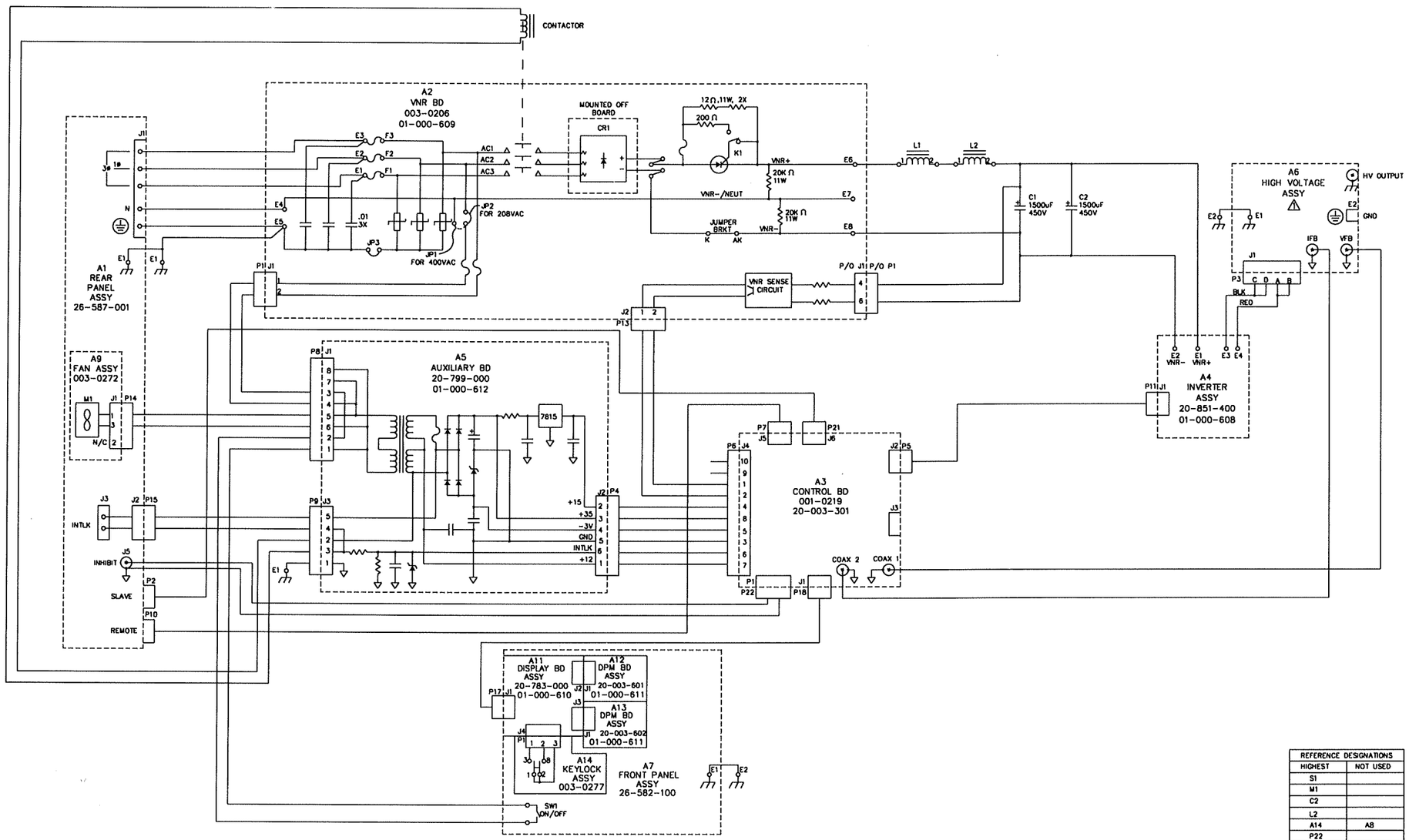

REFERENCE DESIGNATIONS	
HIGHEST	NOT USED
S1	
M1	
C2	
L2	
A14	A8
P22	
E2	

SHEET 1 OF 1

MTL: N/A	TOL: X = ±.03" XX = ±.01" XXX = ±.005" FRAC. = ±1/64" ANGLES = ±1/2°	REL. TO MFG. DWN. DATE. 3/15/96	ENG. CTL. DWN. C.SCHERT DATE. 3/15/96	ELECTRONIC MEASUREMENTS, INC.
FIN: N/A	P.N.: 487 SCALE: NONE	CHK. DATE. 3/15/96 DO NOT SCALE DWG.	CHK. DATE. 3/15/96 APV. DATE. 3/15/96	TITLE: SCHEMATIC 402L 208V AC SYS DWG. NO. 01-487-009 REV. B

THIS IS A COMPUTER GENERATED DWG.
NO MANUAL REVISIONS ARE PERMITTED.

APPLICATION			LTR	E.C.O. NO.	BY	APP.
USED ON	NEXT ASSY.	QTY.	1	INIT REL 5/97	BH	
402L	003-0351		A	TC REL 7/11/97	CJS	

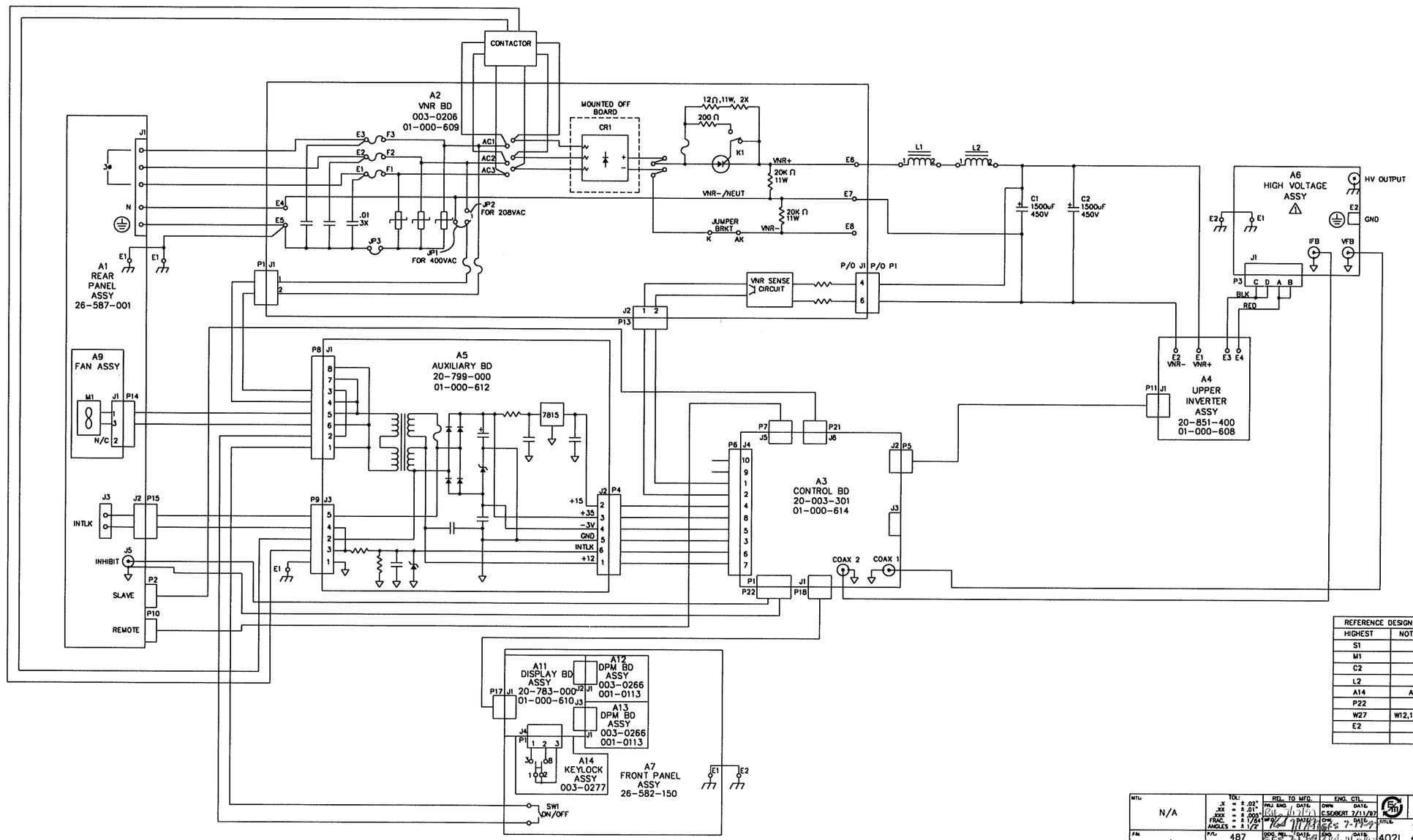

REFERENCE DESIGNATIONS	
HIGHEST	NOT USED
S1	
M1	
C2	
L2	
A14	A8
P22	
W27	W12,17,18,24
E2	

SHEET 1 OF 1

MTL. N/A	TOL: X = ± .02" XX = ± .01" XXX = ± .005" FRAC. = ± 1/64 ANGLES = ± 1/2°	REL. TO MFG. PRJ. ENG. DATE	ENG. CTL. DWN. DATE C.SEGERT 7/11/97	ELECTRONIC MEASUREMENTS, INC.
FIN. N/A	P/L 487	DOC. REL. DATE	APP. DATE	TITLE SCHEMATIC 402L 400VAC SYSTEM
	SCALE N/A	DO NOT SCALE DWG.	APP. DATE	DWG. NO. 01-487-013 REV. A

THIS IS A COMPUTER GENERATED DWG.
NO MANUAL REVISIONS ARE PERMITTED.

APPLICATION			LTR	E.C.O. NO.	BY	APP.
USED ON	NEXT ASSY.	QTY.	06	REVISED PER ECO# 424 8/91	JT	
CONTROL BD.	102, 152, 402, 802		07	ENGINEERING CHANGE 7/95	AK	
			A	ECO 16090 04/30/02	RFC	
			B	ECO 22352 09-27-06	KHL	

NC→J1-1 NC→J1-2 NC→J1-7 NC→J1-11 NC→J1-13 NC→J1-14 NC→J1-26
NC→J2-3 NC→J3-6 NC→J2-9
NC→J3-3 NC→J3-6 NC→J9-9
NC→J5-3 NC→J5-4 NC→J5-7 NC→J5-16 NC→J5-21 NC→J5-26
NC→J6-1 NC→J6-2 NC→J6-3 NC→J6-4 NC→J6-7 NC→J6-16
NC→J6-17 NC→J6-21 NC→J6-24 NC→J6-25 NC→J6-26

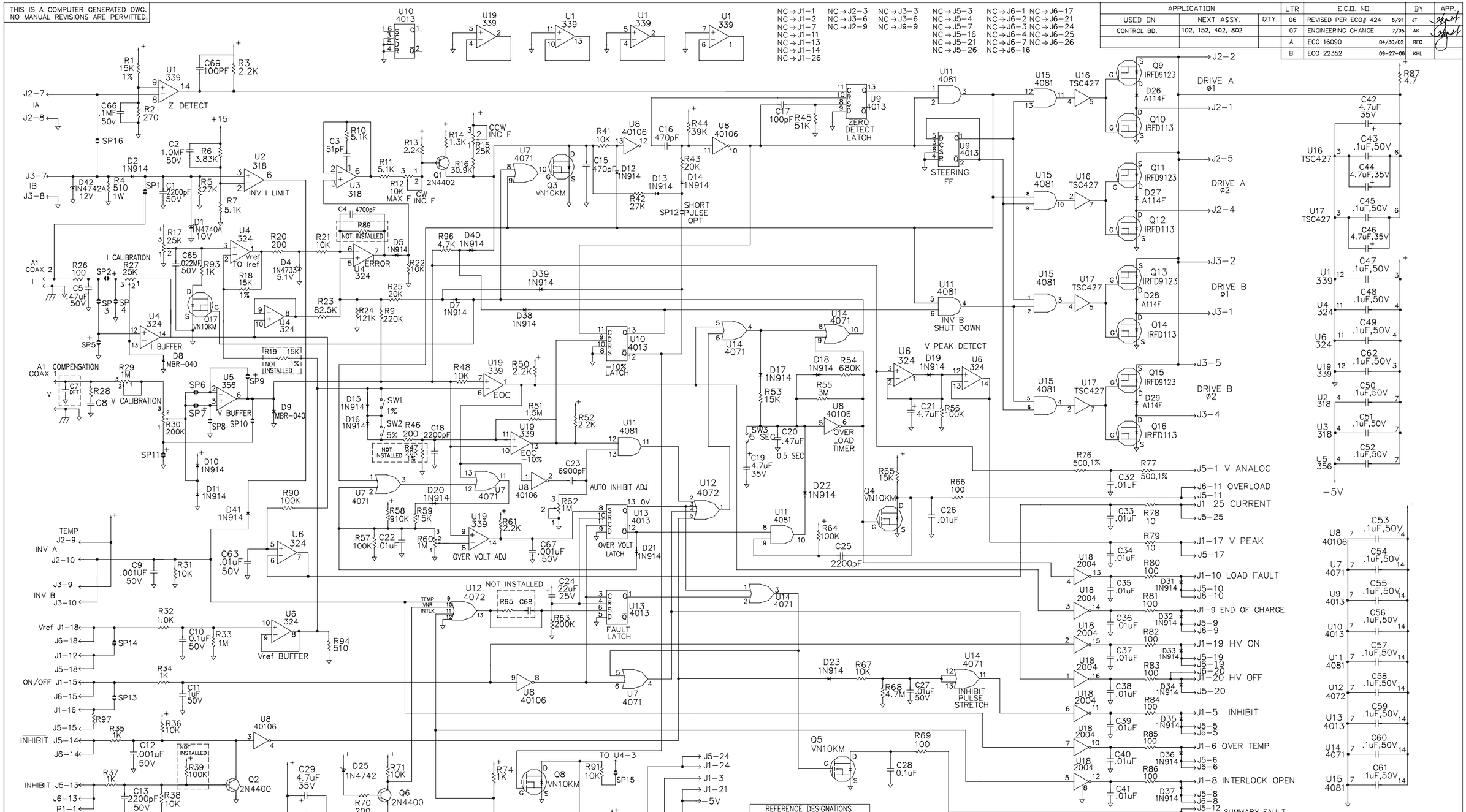

REFERENCE DESIGNATIONS	
HIGHEST	NOT USED
C69	
COAX2	
D42	
J6	
P1	
Q17	
R96	R92,94
SP15	
SW3	
U19	

NOTE: REF. DES. NOT POPULATED ARE C8,64,68;D3,30;R8,9,47,49,88,95.

AUTOCAD DRAWING.
THIS IS A STANDARD FORMAT.
NOT ALL BOXES APPLY TO EVERY
DRAWING AND MAY NOT BE FILLED IN.

SHEET 1 OF 1

MTL: N/A	TOL: .X = ± .02" .XX = ± .01" .XXX = ± .005" FRAC. = ± 1/64" ANGLES = ± 1/2°	REL. TO MFG. PRJ. ENG. DATE: MFG: DATE: DOC. REL. DATE:	ENG. CTL. DWN: AMGAD 7/13/95 CHK: 7/13/95 APP: 7/13/95
FIN:	P/L: SCALE:	DO NOT SCALE DWG.	

LAMBDA EMI

TITLE: SCHEMATIC CONTROL BD

DWG. NO. 001-0219 REV. B

a.l.e. systems

802 Series Data Sheet

High Voltage Power Supply
Capacitor Charging and DC
Output Voltage from 1kV - 50kV
Output Power 8kJ/sec or 8kW
Full local and remote control

TDK·Lambda

www.us.tdk-lambda.com/hp

802 Series Specification

Industry standard rack mount capacitor charging and DC power supplies with 8kJ/sec rating for capacitor charging, or 8kW rating in continuous DC applications.

- **Power rating of 8kJ/sec, 9kJ/sec peak**
- **Output Voltages from 0-1kV to 0-50kV**
- **Compact air cooled rack mount package**
- **Efficient IGBT based resonant inverter**
- **Excellent pulse to pulse repeatability**
- **208 or 400VAC 3Ø input voltage**
- **Comprehensive remote control interface**
- **UL Approved AC line contactor (optional for OEM models)**
- **Ultra reliable and rugged industry standard design**
- **Passive PFC (pf = 0.85)**
- **Full local output voltage and HV On/Off controls (L version)**
- **Simple parallel operation for higher power**
- **Lab, Slave, or OEM front panel options**

Average Capacitor Charging Power	8,000 Joules/sec ($\frac{1}{2}CV^2$ x Rep Rate)
Peak Capacitor Charging Power	9,000 Joules/sec ($\frac{1}{2}CV^2/t_{charge}$)
Average Continuous DC Power	8,000 Watts
Output Voltage Range	1, 2, 4, 5, 10, 15, 20, 30, 40, 50kV, variable from 10-100% of rated
Polarity	Available as fixed Positive or Negative. Please specify at time of ordering
HV Output Cable	1-39kV Models - DS2124 Coaxial cable with proprietary HV connector
	40-50kV Models - DS2214 Coaxial cable with proprietary HV connector
HV Insulating Medium	Exxon Mobil Univolt N61B or equivalent insulating oil
AC Input Voltage	208VAC (180-264), 3Ø or 400VAC (340-460), 3Ø + N, specify at time of ordering
AC Input Current	40A/25A
AC Connector	UL/CSA approved terminal block. 3Ø + ⏚ for 208VAC, 3Ø + N + ⏚ for 400VAC
AC Line Contactor	UL/CSA approved AC line contactor (standard on 802L and 802S, option for 802OEM)
Power Factor	Passive PFC pf = 0.85 at full load and nominal AC line
Efficiency	Better than 85% at full load
Front Panel	802L - Voltage Control, Voltage & Current Meters, Status Indicators
	802S - On/Off Switch, Status Indicators
	802-OEM - Blank front panel
Stability	0.2% per hour after 1 hour warmup
Temperature Coefficient	100ppm per °C typical
Stored Energy	Less than 0.3J all models
Pulse to Pulse Repeatability	±2% to 1000Hz, consult factory for higher rep rates
Dimensions - inches (mm)	19 (483) W x 8.72 (222) H x 17 (432) D
Weight - lbs (kg)	80 (37)
Ambient Temperature	Storage: -40 to +85°C. Operating: -20 to +45°C
Altitude	Storage: 40,000ft (12,000m), Operating: 9,900ft (3,000m)
Humidity	10-90%, non-condensing
Protection	Open/short circuits, Overloads, Arcs, Overtemp, Overvoltage, Safety Interlock
Remote Control (all models)	Via 25-pin D-sub connector on rear of unit, Signals include, Vprogram (0-10V), HV Enable/Reset, Inhibit, Summary Fault, Load Fault, Vanalog, Vpeak
Accessories	10ft HV cable, operating manual
Options	EN - Low Enable. Replaces standard high enable
	5V - 0-5V Analog programming. Replaces standard 0-10V programming.
	LP - Latching Overload Protection, requires HV reset after overload fault
	DC - Continuous DC operation
	CT - AC line contactor (option for 802OEM models only, standard on 802L and 802S)
	Double terminated HV cable, and mating bulkhead connector
Ordering Info	Model - XXkV - POS (or NEG) - YYYVAC - ZZ (options)
Ordering Examples	802L-10kV-POS, 802S-1kV-NEG-DC, 802-OEM-50kV-POS-400VAC
All specifications subject to change without notice	

802 Series Mechanical Details

802L Front View

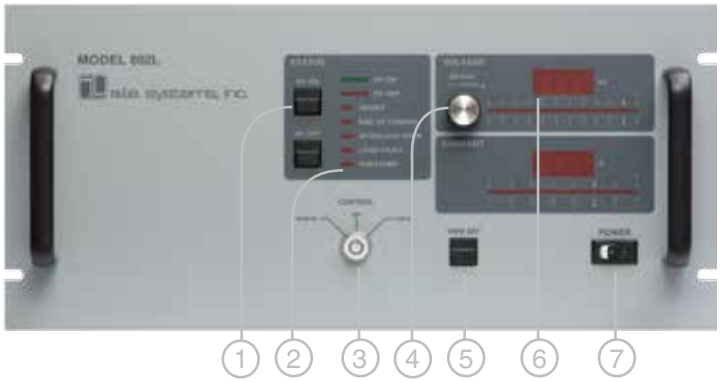

802L Rear View

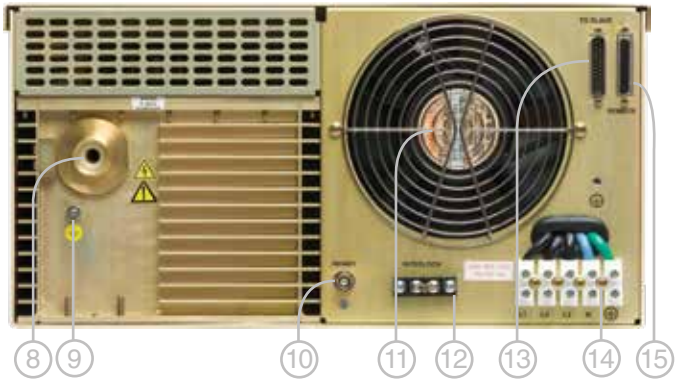

1 - HV On/Off Push Buttons (L model only)
2 - Status Indicator LEDs (L and S models only)
3 - Local/Remote Keyswitch (L model only)
4 - 10-Turn HV Output Control (L models only)
5 - View Set Push Button (L models only)
6 - Output Voltage and Current Displays (L models only)
7 - Power Switch (L and S models only)

8 - HV Output Connector
9 - Ground Stud
10 - Inhibit BNC (L models only)
11 - Cooling Fan
12 - Interlock Terminals (L and S models only)
13 - Slave Supply Programming Connector (L models only)
14 - AC Input Terminal Block
15 - Remote Programming Connector

Outline Drawings

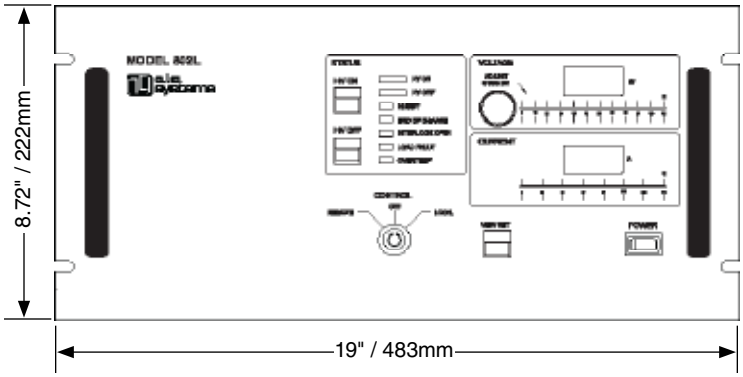

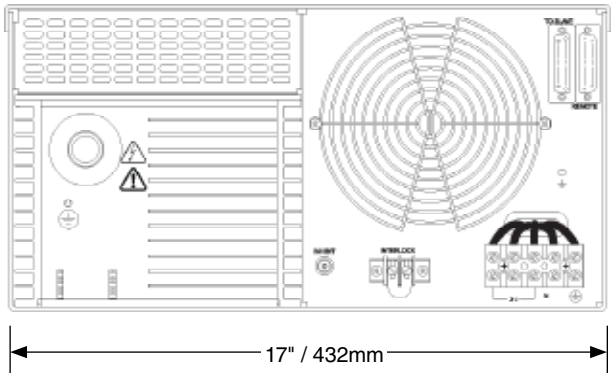

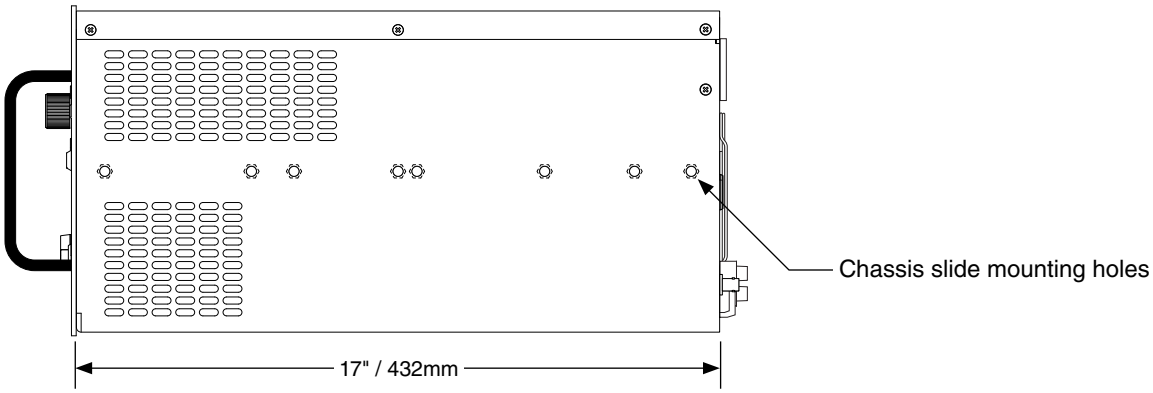

Notes:

1 - Chassis slide mounting pattern matches General Devices CT series or equivalent with 3.875" hole spacing.

2 - Cooling air exits rear of unit and enters at either side. Do not block air vents or cooling fan and allow several inches of clearance at rear of unit.

3 - Allow 6" bend radius at rear of unit for HV cable.

GLOBAL HIGH VOLTAGE NETWORK

NORTH AMERICA

TDK-Lambda Americas Inc., High Power Division
405 Essex Rd. Neptune, NJ 07753
Tel: +1-732-922-9300, Fax: +1-732-922-1441
E-mail: andy.tydeman@us.tdk-lambda.com
Web: www.us.tdk-lambda.com/hp

CANADA

TMetrix
5805 Kennedy Road Mississauga,
Ontario L4Z 2G3
Tel: +1-905-890-2010, Fax: +1-905-890-1959
E-mail: lambda@aca.ca, Web: tmetrix.com

UK **IRELAND**

Pulse Power & Measurement Ltd.
65 Shrivenham Hundred Business Park
Watchfield, Swindon
Wiltshire, SN6 8TY
Tel: +44-1793-784389, Fax: +44-1793-784391
Email: sales@ppm.co.uk, Web: www.ppmpower.co.uk

FRANCE **BELGIUM** **SPAIN** **NETHERLANDS** **LUXEMBOURG**

TDK-Lambda France
ZAC des Delaches CS 41077, 9 rue Thuillere
91978 Villebon Courtaboeuf
Tel: +33 1 60 12 71 65, Fax: +33 1 60 12 71 66
Email: france@fr.tdk-lambda.com
Web: www.fr.tdk-lambda.com

GERMANY **AUSTRIA** **SWITZERLAND**

Guth GmbH
Spitzenbergstrasse 6
D – 73084 Salach
Tel: +49-7162-948930, Fax: +49-7162-9489399
Email: kontakt@guth-hv.de, Web: www.guth-hv.de

ITALY

TDK-Lambda Italy
Via dei Lavoratori 128/130
IT 20092 Cinisello Balsamo (MI)
Tel: +39-02-6129-3863, Fax: +39-02-6129-0900
Email: info.italia@it.tdk-lambda.com
Web: www.it.tdk-lambda.com

SCANDINAVIA **BALTICS**

Divisoft AB
Rallarvägen 41, SE-184 40 Åkersberga, Sweden
Tel: +46 8 540 248 09, Fax: +46 8 501 096 53
Email: iain@divisoft.se, Web: www.divisoft.se

ISRAEL **RUSSIA** **UKRAINE**

TDK-Lambda Israel Ltd.
Kibbutz Givat Hashlosha Tel-Aviv 48800
Tel: +972-3-9024-333, Fax: +972-3-9024-777
Email: info@tdk-lambda.co.il, Web: www.tdk-lambda.co.il

BRAZIL

Suplitec
Rua Sena Madureira 455, Belo Hte - 31340-000
Tel: +55-31-3498 1177, Fax: +55-31-3441 0841
Email: vendas@suplitec.com.br, Web: www.suplitec.com.br

MEXICO

AcMax De Mexico
Rosas 139 Col. Bugambilias. Puebla, Pue. C.P. 72580
Tel: +52-800-211-0060, Fax: +52-264-1445
Email: edaena@acmax.mx, Web: www.acmax.mx

JAPAN **KOREA**

Electronics Optics Research, Ltd
4-26-19 Koenji-Minami
Suginami-ku, Tokyo 166-0003
Tel: +81-333-145699, Fax: +81-333-142333
Email: imamura@eor.jp, Web: www.eor.jp

CHINA

TDK-Lambda Shanghai Office
2nd Floor of Building No.1, No.15 Guiqing Road,
Shanghai, 200233 P.R. China
Tel: +86-21-64850777, Fax: +86-21-64850666
Email:sales-sh@cn.tdk-lambda.com
Web: www.cn.tdk-lambda.com

MALAYSIA

TDK-Lambda Malaysia
No.7.3, 7th Floor, Jaya Shopping Center,
Jalan Semangat Section 14, 46100
Petaling Jaya Selangor, D.E
Tel: +60-3-7957-8800 Fax: +60-3-7958-2400
Web: www.tdk-lambda.com.my

SINGAPORE **PHILIPPINES** **THAILAND**

TDK-Lambda Singapore
1008 Toa Payoh North # 06-01/08
Singapore 318996
Tel: +65-6251-7211 Fax: +65-6250-9171
Web: www.se.tdk-lambda.com

INDIA

TDK-Lambda India
#526, Ground Floor, 10th Main, 7th Cross,
Jeevanbhimanagar, Bangalore 560 075, Karnataka, India
Tel : +91-80-43550500, Fax :+91-80-43550501
Email: mathew.philip@in.tdk-lambda.com
Web www.in.tdk-lambda.com

SOUTH AFRICA

PaR Systems (Pty) Ltd.
Pretoria, South Africa
Tel: +27-12-5480370, Fax: +27-12-5480447
Email: ndupreez@par.com
Web: www.sdilasers.com

93 008 010 Rev F

TDK-Lambda Americas Inc. 405 Essex Road, Neptune, NJ 07753 USA
Tel: +1 732 922 9300 Fax: +1 732 922 1441
www.us.tdk-lambda.com/hp

OPERATOR MANUAL FOR

802 Series High Voltage

POWER SUPPLY

Document: 83488001 Rev L

TDK-LAMBDA AMERICAS

405 Essex Road, Neptune, NJ 07753

Tel: (732) 922-9300

Fax: (732) 922-9334

Web: www.us.tdk-lambda.com/hp

PAGE LEFT INTENTIONALLY BLANK

ONE YEAR WARRANTY

TDK-Lambda Americas, Inc. (405 Essex Road, Neptune, N.J. 07753), warrants that the unit is free from defects in material or workmanship for a period of ONE YEAR from the date of initial shipment. TDK-Lambda Americas Inc. will service and, at its option, repair or replace parts which prove to be defective. This will be done free of charge during the stated warranty period. This warranty excludes defects resulting from misuse, unauthorized modification, operation outside the environmental or safety specifications of the power supply, or improper site preparation or maintenance. The customer shall contact TDK-Lambda Americas Inc., for warranty service or repair as described in the RETURNING EQUIPMENT section. The customer shall prepay shipping charges. If the unit is covered under the foregoing warranty, then TDK-Lambda Americas Inc. shall pay the return shipping charges.

The “WARRANTY”, “CLAIM FOR DAMAGE IN SHIPMENT”, and “RETURNING EQUIPMENT” information applies to equipment purchased directly from TDK-Lambda Americas Inc. End users receiving equipment from a third party should consult the appropriate service organization for assistance with these issues.

THIS LIMITED WARRANTY IS IN LIEU OF, AND TDK-LAMBDA AMERICAS INC. DISCLAIMS AND EXCLUDES, ALL OTHER WARRANTIES, STATUTORY, EXPRESS OR IMPLIED, INCLUDING, WITHOUT LIMITATION, ANY WARRANTY OF MERCHANTABILITY OR FITNESS FOR A PARTICULAR PURPOSE, OR OF CONFORMITY TO MODELS OR SAMPLES.

CERTIFICATION

All test and measuring equipment used by TDK-Lambda Americas Inc. for Final Acceptance Testing are traceable to primary standards certified by the National Institute of Standards and Technology.

LETHAL VOLTAGES PRESENT!

All power supplies contain hazardous voltage and energy. The power supply must only be operated by qualified personnel who have read this operator’s manual and are familiar with the operation, hazards and application of the power supply. Proper care and judgment must always be observed.

1. Before connecting input AC power, ensure all covers are in place and securely fastened. Ensure the required safety ground to chassis is installed and sufficient cooling is supplied.
2. Proper grounding from the input AC power is required to reduce the risk of electric shock, and to comply with safety agency and code requirements.
3. Use extreme caution when connecting input AC power. Only apply the input voltage specified on the rating label.
4. Use extreme caution when connecting any high voltage cables. Never handle any output cables when the power supply is operating.
5. After a power supply is switched OFF, its output section will retain a charge which may be lethal. Allow sufficient time for self-discharge before handling anything connected to the output. The discharge time specified in the Safety Notes does *NOT* include extra time required to discharge the energy stored in the user’s load.
6. When user serviceable fuses are present, always replace fuses with the same type and Volt/Amp rating.
7. Never attempt to operate the power supply in any manner not described in this manual.
8. Never remove DANGER or WARNING labels from the power supply. Replace lost or damaged labels immediately. Contact TDK-Lambda Americas Customer Service for replacement labels.
9. The power supply may be serviced only by TDK-Lambda Americas Inc. factory qualified service personnel. Breaking the warranty seal will void the warranty. Prior to opening the power supply, contact TDK-Lambda Americas Inc. Customer Service for a written Service Waiver and a replacement warranty seal.

TDK-Lambda

MANUFACTURER'S PRODUCT DECLARATION

INTENDED PURPOSE (USE)

The Power Supplies described by this manual are defined by TDK-Lambda Americas Inc. as a component for use in the composition of an apparatus as defined in Article 1 (1) of the EMC Directive (89/336/EEC). These products, as individual components, do not perform in themselves a direct function for the user of the end product. They are not intended to be placed on the market with a direct function to a final user! As such, the products described by this manual are not subject to the provisions of the EMC Directive (89/336/EEC, with amendment 92/31/EEC).

The products described by this manual are intended for incorporation into a final product by a professional assembler. It is the responsibility of the assembler to ensure that the final apparatus or system incorporating our products complies with all relevant EMC standards for that final product.

OPERATING ENVIRONMENT

The operating environment as defined by TDK-Lambda Americas Inc., for the products described by this manual is stated as follows:

The Power Supplies described by this manual are intended for use in a protected industrial environment or in proximity to industrial power installations. These locations are often referred to as industrial locations containing establishments that are not connected to the low voltage public mains network.

Industrial locations are characterized by the existence of one or more of the following conditions:

1) industrial, scientific and medical (ISM) apparatus are present;
2) heavy inductive or capacitive loads are frequently switched;
3) currents and associated magnetic fields are high;
4) location supplied by their own transformer.

These components are not intended for connection to a public mains network, but are intended to be connected to a power network supplied from a high or medium-voltage transformer dedicated for the supply of an installation feeding manufacturing or similar operations. They are suitable for use in all establishments other than domestic and those directly connected to a low voltage power supply network which supplies buildings used for domestic purposes.

TDK-Lambda

Description of symbols used in product labeling

SYMBOL	PUBLICATION	DESCRIPTION
	EC Council Directive 93/68/EEC	European Community Conformity Assessment Product Mark
	IEC 348	Attention, consult Accompanying documents
	IEC 60417-1-5036	Dangerous voltage
	IEC 60417-1-5019	Protective earth (e.g. power line earth ground)
	IEC 60417-1-5017	Functional earth (e.g. chassis ground)
	IEC 60417-1-5134	Electrostatic Discharge (ESD) Sensitive Device

ELECTRICAL STANDARDS

All company primary standards are either certified or are traceable to certification by the National Institute of Standards and Technology.

CLAIM FOR DAMAGE IN SHIPMENT

This instrument received comprehensive mechanical and electrical inspection before shipment. Immediately upon receipt from the carrier, and before operation, this instrument should be inspected visually for damage caused in shipment. If such inspection reveals damage in any way, a claim should be filed with the carrier. A full report of damage should be obtained by the claim agent and this report should be forwarded to us. We will then provide a disposition of the equipment and arrange for repair or replacement.

When referring to this equipment, always include the model and serial numbers.

The "WARRANTY", "CLAIM FOR DAMAGE IN SHIPMENT", and "RETURNING EQUIPMENT" information applies to equipment purchased directly from TDK-Lambda Americas Inc. End users receiving equipment from a third party should consult the appropriate service organization for assistance with these issues.

RETURNING EQUIPMENT

Before returning any equipment to the factory, the following steps shall be taken.

1. Notify TDK-Lambda Americas Inc. at 732-918-6888 or follow the instructions at www.US.TDK-Lambda.com/HP/service.htm. Give a full description of the difficulty including the model and serial number of the unit in question. Upon receipt of this information, we will assign a Return Material Authorization (RMA) number and provide shipping instructions.
2. The customer shall prepay shipping charges. Equipment returned to us must be packed in a manner to reach us without damage. The shipping container must be marked with the RMA number in an area approximate to the shipping label with numbers that are easy to read. All returned units that do not show the RMA number on the outside of the container will be refused.

   If the equipment is repaired within the warranty agreement, than TDK-Lambda Americas Inc. shall pay for the return shipping to the customer.
3. For non-warranty repairs, we will submit a cost estimate for your approval prior to proceeding. The customer shall pay return shipping charges.

MECHANICAL INSTALLATION

Most power supplies are heavy and, when rack mounted, they should be supported by rails along the sides of the supply from front to rear. The rails must adequately support the unit and not block airflow. Do not support the power supply from the front panel only.

Table of Contents

List of Figures

List of Tables

Notes

1. GENERAL INFORMATION

1.1. User Manual Content

This User's Manual contains the operating instructions, installation instructions and specifications for the ALE 802 series high voltage power supply. The instructions refer to standard power supply models, and include checkout, installation, and operation of the 802 series. Suggestions and requirements for connecting AC power, load cables and signal cables are given. Various operating modes and programming modes are described.

The model 802 is just one model in a broad family of HV power supplies covering the power range from 500J/sec to 30kJ/sec in a single package, and to 1MW and beyond in parallel systems. For more information please visit our web site at: http://www.us.tdk-lambda.com/hp/product_html/high_volt.htm.

NOTE

This manual contains information, instructions and diagrams which apply to standard constructions. If special features or modifications have been installed, the instructions specific to that modification are contained in Addenda and take precedence if conflicts exist. Please take care to refer to the correct information for your unit.

1.2. Introduction

TDK-Lambda Americas ALE model 802 are state of the art constant current switch mode high voltage power supplies, designed to rapidly and efficiently charge capacitors in laser systems, modulators, pulse forming networks, and a broad range of pulse generator circuits, without the need for a series current limiting resistor. They can also be used in many continuous DC applications including beam power for RF devices such as magnetrons, gyrotrons, klystrons and electron beam loads.

The 802 series utilize a high frequency IGBT based series resonant inverter topology which operates as a constant current source. This makes the supply perfect for rapidly charging capacitors which represent a challenging load for conventional HV DC supplies using multiplier designs.

The 802 series is available with a choice of three different front panel configurations designed to suit different applications and end uses. All models feature the same comprehensive remote control interface which is detailed in Section 6.2.

The **802L** Model is fully instrumented with front panel meters displaying output voltage and current, status LEDs, a key switch for OFF, LOCAL or REMOTE operation, HV ON/OFF push-button switches, and a 10 Turn output voltage control. The rear panel features external interlock, inhibit, remote control and slave (parallel operation) control connections.

The **802S** Model can only be operated by remote control and features only status LEDs and a power switch on the front panel. The "S" Models have been designed to operate as a slave unit to the "L" Models or in systems where local control is not a requirement.

The **802OEM** features a blank aluminum front panel and can only be operated by remote control.

As many 802 supplies as required, can be connected in parallel to provide greater output power.

1.3. 802 Overview

1.3.1. Features

- 8kJ/sec capacitor charging power, 8kW in continuous DC applications.
- Output voltages from 0-1kV to 0-50kV.
- Rep rates from single shot to kilohertz.
- Local (L Model) or remote operation with comprehensive control interface.
- Cost effective blank front panel version for OEM applications.
- Constant current topology for rapid efficient charging.
- Parallel operation (master/slave) for high power applications.
- Compact Air Cooled design.
- Passive Power Factor Correction reduces RMS current draw.

1.3.2. Benefits

- Lightweight switchmode design.
- Rack mount chassis configuration.
- Low stored energy provides greater safety.
- Constant current design eliminates series current limit resistance in charge circuit.
- Immunity to external EMI.

1.3.3. Applications

- Charging capacitors and capacitor banks.
- Powering pulse forming networks/modulators.
- Powering lasers: Excimer, flashlamp pumped dye, Yag, CO_2, etc.
- Continuous power for RF tubes – magnetron, gyrotron, TWT, klystron etc.
- Electron beam applications.
- DC power source for pulsed hard-tube and solid state modulators.

1.4. Capacitor Charging Technology

Capacitor charging applications require a power supply designed specifically for the task. The 802 series supplies allow capacitors to be charged in pulse forming networks and modulators in a very fast, efficient and controllable manner.

The units are compact high power constant current sources that can linearly and rapidly charge a capacitive load to high voltage. Once the load capacitor is charged to the programmed voltage, the supply will switch over to a voltage regulation mode and maintain the load voltage at the programmed level until it is discharged.

The flexible design of the 802 allows the unit to be ordered with (L model) or without (S and OEM model) the front panel controls and meters. Front panel controls are ideal in applications where local control and read backs are necessary, such as R&D, laboratory use and diagnostics. All front panel controls and indicator signals are available at the rear panel remote control connector regardless which panel option (L, S, or OEM) is selected.

The unit is self-contained, requiring only AC power and appropriate controls. Several units may be connected in parallel for higher power operation. There is no theoretical limit to the number of units that may be paralleled. Typically one master unit and one or more slave or OEM units may be used to obtain as much output power as necessary. The 802 is also ideally suited to charge reservoir capacitors in resonant charging circuits where high rep rates (several kilohertz) are required, such as in metal vapor lasers or solid-state modulators.

1.5. Continuous DC Operation

Although the 802 series has been designed for capacitor charging applications, they can also be used as a continuous DC High Power Source for RF tubes such as klystrons, TWTs, or other DC loads such as DC-DC converters. The DC option must be specified when ordering, and the supply will be factory setup and tested with a continuous DC load. When 802 supplies are operated in continuous DC applications it is often necessary to add an external capacitor between the load and ground to improve the ripple performance of the unit. Our online Application Note 505 describes operating capacitor charging supplies in DC applications, and gives guidance in determining the size of any additional external filter capacitance required. App Note 505 can be found at:

http://www.us.tdk-lambda.com/hp/pdfs/application%20notes/93008505rC.pdf

Consult the factory before connecting parallel units in continuous DC applications.

1.6. Additional Features:

- Internal contactor and fuses for AC disconnect and protection
- Standard AC power and control connectors
- Documentation Manual Including -
- Installation, check out, suggested remote interfaces and control circuits
- 10 ft (3m). Output cable is standard, other lengths are optional.

1.7. Safety Precautions

All 802 power supplies are designed to minimize the risk of fire or shock hazard. This instrument received comprehensive mechanical and electrical inspection prior to shipment. Nevertheless, certain safety precautions must be observed. Only TECHNICALLY QUALIFIED SERVICE PERSONNEL familiar with the principles of electrical safety should operate this supply. The power supply SHOULD NOT BE EXPOSED TO WATER OR MOISTURE OR DUSTY ENVIRONMENTS. Electrical safety must be maintained at all times.

Lethal voltages are developed within the power supply's enclosure and at the output cable. Therefore, the cover may not be removed by the user (see Warranty in preamble section for variance). Also, the large capacitors in the supply may store power even after the AC input line is removed. ALLOW AT LEAST 40 SECONDS DISCHARGE TIME between removing the AC input line and opening the cover. ALSO, ALLOW AT LEAST 40 SECONDS between switching the AC power off and switching it on again.

1.7.1. This product is designed for Indoor use.

1.7.2. This product is designed for pollution degree 2.

1.7.3. This product is designed for Transient Overvoltage Category II

1.7.4. Ensure all covers are in place and securely fastened before switching ON the AC power.

1.7.5. Proper grounding from the input AC power is required to reduce the risk of electric shock. Ensure that the AC Protective Earth Ground connection has at least the same gauge wire as the supply leads shown in Table 2.

1.7.6. Use extreme caution when connecting AC input power, and never apply the incorrect input voltage, refer to ratings label.

1.7.7. Use extreme caution when connecting the high voltage output cable to the load.

1.7.8. Ensure all load capacitors are completely discharged prior to connection. Never handle the output cable when the power supply is operating.

1.7.9. Never attempt to operate the power supply in any manner not described in this manual.

1.7.10. Never remove DANGER and WARNING labels from the power supply. Replace lost or damaged labels immediately.

1.7.11. The power supply should only be serviced by factory authorized personnel.

1.7.12. No user maintenance is required.

1.8. Model Number Format

The model numbering system for the 802 Series power supply includes symbols for features and options. They are separated by dashes.

Examples are: 802L-10kV-POS-400VAC and 802S-20kV-POS-DC.

The 802 is available with three front panel configurations, the L, S, and OEM. The choice of panel configuration is dependent upon the installation and system requirements. See section 5 for further details.

Table 1 shows a partial listing of the model description format for the 802 Power Supply family. For additional options, the customer may contact the Sales Department at TDK-Lambda Americas. Special options are typically shown as a four-digit suffix to the model number.

802(model) - (voltage) - (polarity) - (mode) - (input) - (options)

Model (L, S, OEM)
Output Voltage Range kV
POS or NEG Polarity

Mode		
Standard	Capacitor Charging	Blank
DC	Continuous DC Operation	DC

AC INPUT VOLTAGE	Input	Suffix
Standard	200-240VAC, 50-60Hz, 3ϕ (40A Max)	Blank
400VAC Option	380-440VAC + N, 50-60Hz 3ϕ (25A Max)	400VAC

OPTIONS	
5V Programming	5V
Low Enable	EN
Latching Overload	LP
AC Contactor (OEM only)	CT
Custom cable length	xxxx

Table 1 :802 Model Description Format .

2. SPECIFICATION

2.1. Average Charging Power	8,000 Joules/sec ($\frac{1}{2}CV^2$ x Rep Rate)
2.2. Peak Charging Power	9,000 Joules/sec ($\frac{1}{2}CV^2 / t_{charge}$)
2.3. Average DC Power	8,000 Watts
2.4. Output Voltage Range	1, 2, 4, 5, 10, 15, 20, 30, 40, 50kV, variable from 10-100% of rated. Other voltages on request, please contact the factory.
2.5. Polarity	Available as fixed Positive or Negative. Please specify at time of ordering
2.6. HV Output Cable	1-39kV Models - DS2124 Coaxial cable with proprietary HV connector
	40-50kV Models - DS2214 Coaxial cable with proprietary HV connector
2.7. HV Insulating Medium	Exxon Mobil Univolt N61B or equivalent insulating oil
2.8. AC Input Voltage	200-240VAC (180-264), 3Ø or 380-440VAC (340-460), 3Ø + N, 50-60Hz Please specify at time of ordering
2.9. AC Input Current	40A for 200-240VAC Input / 25A for 380-440VAC input
2.10. AC Connector	UL/CSA approved terminal block. 3Ø + GND for 200-240VAC, 3Ø + N + GND for 380-440VAC
2.11. AC Line Contactor	UL/CSA approved AC line contactor (standard on 802L and 802S, option for 802OEM)
2.12. Power Factor	Passive PFC pf = 0.85 at full load and nominal AC line
2.13. Efficiency	Better than 85% at full load
2.14. Front Panel	802L - Voltage Control, Voltage & Current Meters, Status Indicators
	802S - On/Off Switch, Status Indicators
	802-OEM - Blank front panel
2.15. Stability	0.2% per hour after 1 hour warmup
2.16. Temperature Coefficient	100ppm per °C typical
2.17. Stored Energy	Less than 0.3J all models
2.18. Pulse to Pulse Repeatability	±2% to 1000Hz, consult factory for higher rep rates
2.19. Dimensions - inches (mm)	19 (483) W x 8.75 (222) H x 17 (432) D
2.20. Weight - lbs (kg)	80 (37)
2.21. Ambient Temperature	Storage: -20 to +70°C. Operating: -20 to +45°C
2.22. Altitude	Storage: 40,000ft (12,000m), Operating: 9,900ft (3,000m)
2.23. Humidity	10-90%, non-condensing
2.24. Protection	Open/short circuits, Overloads, Arcs, Overtemp, Overvoltage, Safety Interlock
2.25. Remote Control (all models)	Via 25-pin D-sub connector on rear of unit, Signals include, Vprogram (0-10V), HV Enable/Reset, Inhibit, Summary Fault, Load Fault, Vanalog, Vpeak
2.26. Accessories	10ft HV cable, operating manual

2.27. Options	EN - Low Enable. Replaces standard high enable
	5V - 0-5V Analog programming. Replaces standard 0-10V programming.
	LP - Latching Overload Protection, requires HV reset after overload fault
	DC - Continuous DC operation
	CT - AC line contactor (option for 802-OEM only, standard on 802L and 802S)
	Double terminated HV cable, and mating bulkhead connector
2.28. Ordering Info	Model - XXkV - POS (or NEG) - YYYVAC - ZZ (options)
2.29. Ordering Examples	802L-10kV-POS, 802S-1kV-NEG-DC, 802-OEM-50kV-POS-400VAC
All specifications subject to change without notice	

3. OUT OF BOX INSPECTION

3.1. Visual Inspection

Prior to shipment, this instrument was inspected and found to be free of mechanical and electrical defects. As soon as the unit is unpacked, inspect for any damage that may have occurred in transit. Verify the following:

a) Check the operation of the front panel control (knob should rotate smoothly).
b) Confirm that there are no dents or scratches on the panel surfaces.
c) Check front panel meters and LEDs for any broken or cracked lenses.

If any damage is found, follow the instructions in Section 3.3.

3.2. Electrical Inspection

Before the power supply is installed in a system, verify that no internal damage occurred during shipping. A set of simple preliminary electrical test can be performed if desired. These tests are described below.

NOTE
The sequences described are for L model supplies with local controls, for S and OEM models the corresponding signals must be applied and monitored through the remote control interface.

3.2.1. Test 1

Purpose: Verify general logic operation, generate maximum output current, and check overload protection circuits. With AC power "OFF" and disconnected, short the HV output by connecting the center conductor of the output cable to its return shield (braid). This dead short will allow the unit to generate full output current at zero voltage.

1. Set the output voltage control to zero. Connect AC power to the unit. Turn "ON" the AC power front panel switch.
2. Turn the front panel keyswitch to the LOCAL position (if applicable). Press the HV "ON" button and turn up the HV control until the power supply is generating output current into the dead short. The current meter will indicate max. current. The voltage meter will read zero and the power supply will intermittently turn on and off indicating the "overload" condition. The unit should continue to indefinitely cycle in this mode with a 1 second period. (The power supply will go into overload when max. current is drawn for more than half a second). If the LP option is installed, the unit will shut down and indicate a fault after delivering full current for 500milliS.
3. Turn off the HV and AC power switches.

This test indicates the inverter section is generating maximum current and the logic and overload circuitry works correctly.

3.2.2. Test 2

Purpose: Verify that the power supply generates maximum rated voltage, and the regulation and feedback circuits are functioning.

1. With AC power OFF and disconnected, connect an appropriate load capacitor to the power supply output cable. Select the capacitor size so the charge time is several milliseconds or more.
2. Prepare to charge the capacitor. NOTE: Operating a 802 power supply into an open circuit (no load operation) will instantly damage the power supply's HV output

diodes. Make sure the load (capacitor) is connected and the HV output cable is securely inserted and connected.

3. Turn the voltage control on the front panel all the way down to zero (counter clockwise), apply AC power, turn the front panel keyswitch to the LOCAL position (if applicable), and press the HV ON button. By turning up the HV control knob the capacitor will charge to the voltage indicated on the front panel voltmeter. The power supply may be turned all the way up to its max. output voltage provided the load capacitor is sufficiently rated.
4. By turning the voltage control down or depressing the HV OFF button, the capacitor will slowly "bleed" down through the internal voltage divider resistors used for regulation feedback. Use an external discharge wand to ensure the capacitor is fully discharged.

Test #2 indicates the HV section is working correctly. Tests 1 and 2 generally indicate the unit is functioning as designed. Although 100% power had not been generated, these two tests give greater than 90% confidence that the unit is not damaged.

If any inconsistency from the above test procedure is noted, do not hesitate to call TDK-Lambda Americas Customer Service for assistance.

3.3. Contacting TDK-Lambda Americas Customer Service

When contacting customer service locate the product description, part number and serial number from the label located on the rear of the unit, and have this information available.

Phone: (732) 922-9300 E-mail: hp.service@us.tdk-lambda.com
Fax: (732) 922-1441

Customer Service, or an approved Service Center, should be contacted if:

- The power supply is mechanically or electrically damaged.
- The power supply requires on-site calibration, or replacement warning decals.
- The customer has questions about a special application that is not described in this manual.

Normally, the customer may *NOT* open any chassis covers that have a warranty seal. Breaking a seal will void the warranty.

At the discretion of TDK-Lambda Americas, the customer may be granted permission to break the warranty seal and open the chassis covers. Customer Service shall confirm the permission by sending a replacement seal. Once the unit has been serviced, the customer shall close the cover and apply the replacement seal adjacent to (not on top of) the broken seal.

3.4. Returning Defective Units

If a unit needs to be returned to the factory for repair, the factory must first assign an RMA number. Please complete and send the online RMA request form at http://www.us.tdk-lambda.com/hp/RMA_request.htm and an RMA number will be assigned. Follow the return instructions on the form or at http://www.us.tdk-lambda.com/hp/returns.htm.

4. INSTALLATION

4.1. 19-Inch Rack Mounting

This power supply is intended for mounting in a conventional 19-inch equipment rack. It's 8.75 inch height makes it a "5U" size instrument. The rack should enclose the sides, top and back to protect the operator from electrical shock and protect the supply from environmental contamination.

> ⚠ Never install the 802 so its weight is supported only by the front panel screws!

The 802 must never be installed without support in the back or sides of the unit. The 802 should be mounted on support rails or chassis slides –such as General Devices CTS-124- or on a suitable shelf or supports inside the rack.

The mechanical outline of the 802 is shown in Figures1 through 3.

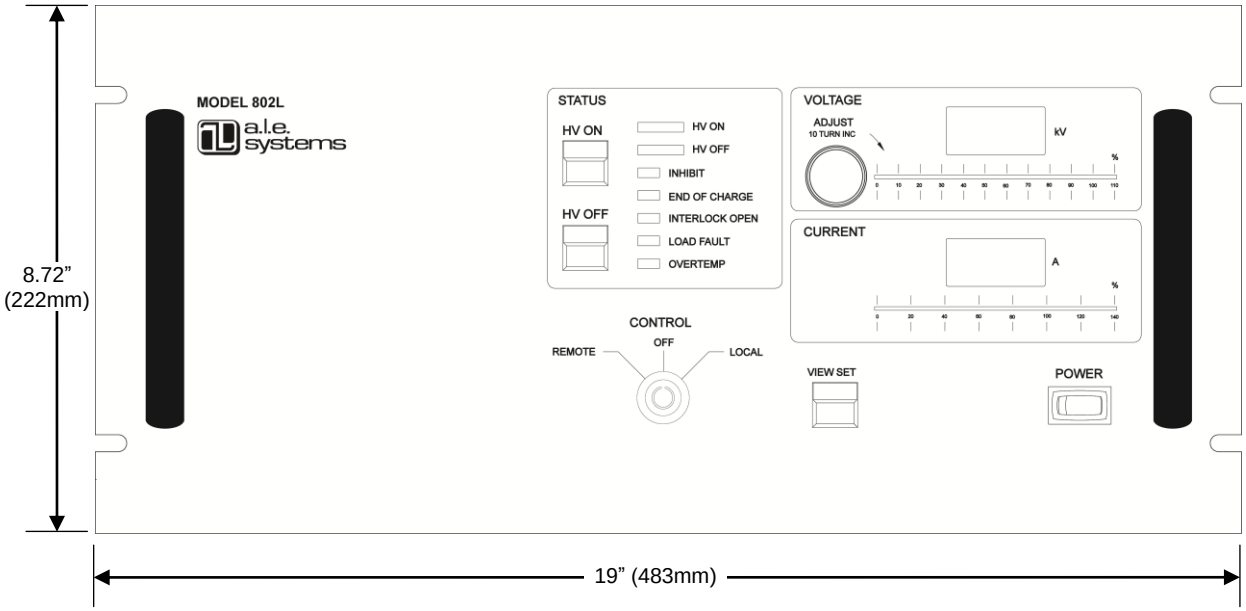

Figure 1. 802L Front View

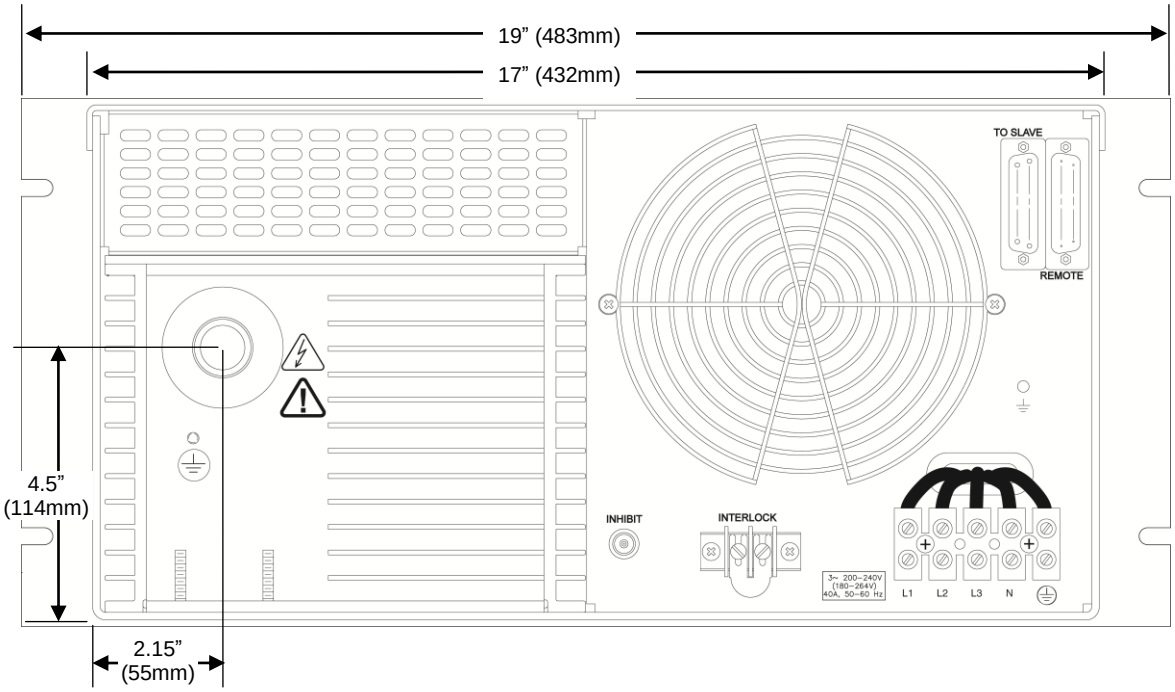

Figure 2. 802L Rear View

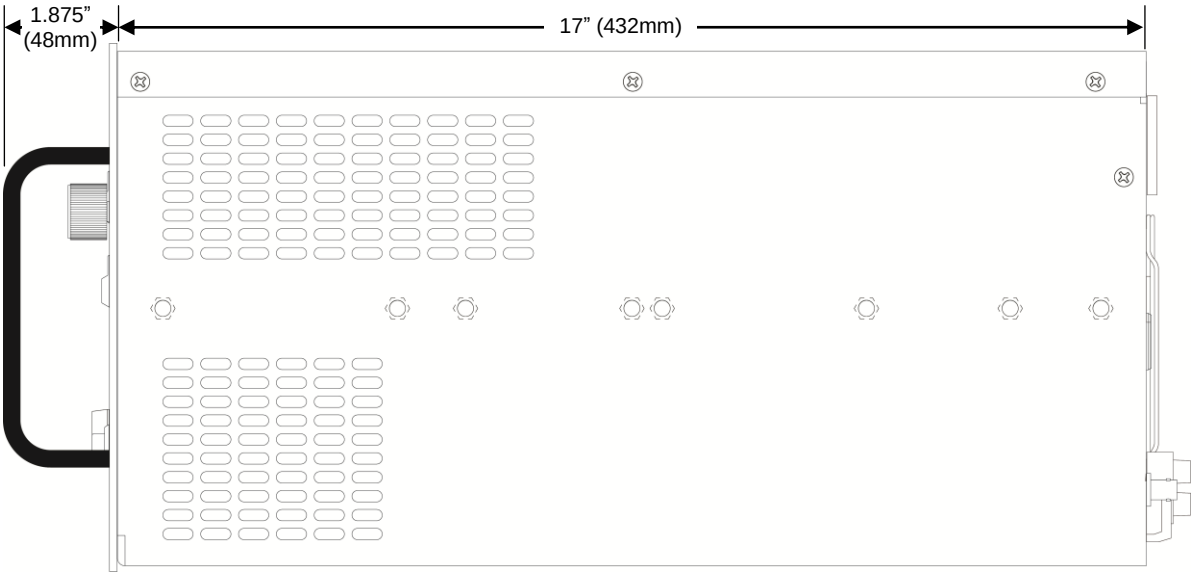

Figure 3. 802L Side View

4.2. Ventilation Requirements

This instrument is fan cooled. Sufficient space must be allocated so that a free flow of cooling air can reach the back and sides of the instrument when it is in operation. Ensure these clearances are met for adequate air flow:

- 4 inches (10 cm) rear
- 1 inch (2.5 cm) on each side.

Cooling air exits through the rear of the unit, and enters through the side panels and around the HV tank. This power supply should not be operated with its cover removed since the cover directs the flow from the internal fan.

When operating in an enclosed system, care must be taken to ensure the ambient inlet air to the power supply does not exceed the maximum operating temperature of 45°C. This may require addition of a system heat exchanger.

4.3. Orientation

The power supply must be operated in a level horizontal orientation. More than a quarter of an inch (6.25mm) difference in height in any direction could potentially cause an arcing condition in the high voltage tank and should be avoided.

4.4. AC Power Connection

For 200-240VAC models, the maximum voltage allowed between any two AC input terminals is 264VAC. For 380-440VAC models, the maximum voltage allowed between any two AC input terminals is 460VAC. If this voltage is exceeded, catastrophic damage will result, that is not covered by TDK-Lambda Americas standard warranty.

The customer's AC power line connects to the 802 via a UL/CSA approved 5 position terminal block on the rear panel of the unit (see Figure 1). Only use a power cable with the correct voltage and current rating (see Table 2). The ground wire must be equal to or larger than the recommended gauge. Secure grounding of the input AC power is required to reduce the risk of electric shock. The metal chassis of the power supply is grounded through the earth wire at the input AC power terminal block. Use extreme caution when connecting input AC power and never apply the incorrect input power.

An external switch or circuit breaker with the following parameters must be used as means of disconnection:

a) Rated voltage not less than maximum rated voltage of the power supply

b) Rated current not less than 150% of the power supply rated current

The switch or circuit breaker must be located in proximity to the power supply and within easy access of the operator. The switch or circuit breaker must be marked as disconnecting device for the equipment.

The Protective Earth Ground must be connected before applying AC Line Power to the 802.

Connect the three lines of the input power to the L1, L2, L3 terminals and the earth ground to the terminal marked with the ground symbol (⏚). No neutral connection is required for the 200-240VAC configuration. For models with the 380-440VAC input configuration (340-460VAC) the neutral wire must be connected to terminal marked N. The power connections are not phase rotation sensitive, so any phase can be connected to any of the AC inputs.

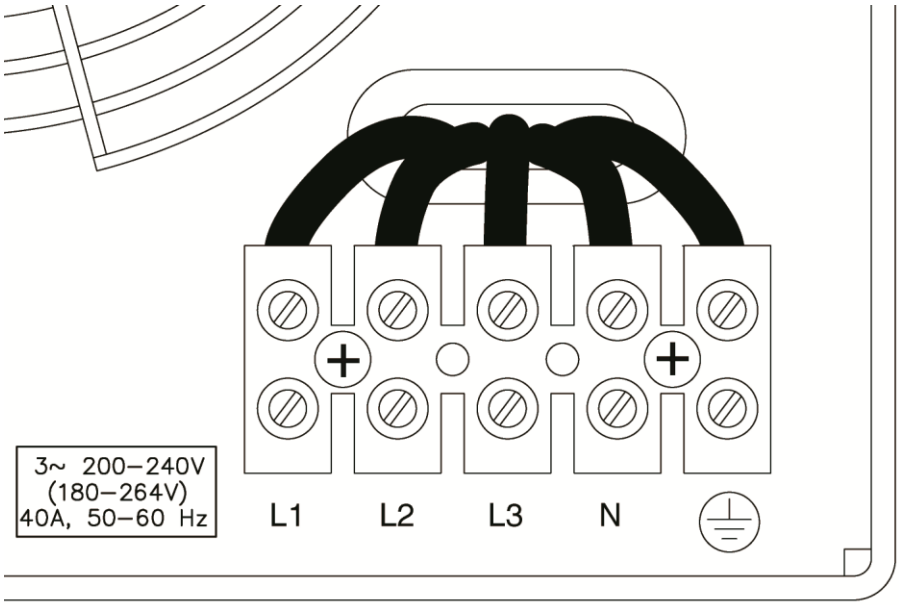

Figure 4 AC Input Terminal Block

If the power supply was purchased with the 400VAC input configuration, in addition to the three phases, the neutral wire must be connected to terminal marked N. Failure to connect the Neutral wire in a 400VAC unit may result in damage to the supply.

AC INPUT VOLTAGE	MODE	RECCOMENDED AC INPUT CABLE SIZE & RATING
200-240VAC (180-264VAC), 50-60 Hz, 3ϕ	Cap Charging	$9mm^2$/8 AWG, 600V
	Continuous DC	$9mm^2$/8 AWG, 600V
380-440VAC (340-460VAC), 50-60 Hz, 3ϕ	Cap Charging	$6mm^2$/10 AWG, 600V
	Continuous DC	$6mm^2$/10 AWG, 600V

Table 2 Recommended AC Input Cable

The AC input rating is marked on the rear terminal of the power supply. The rating is also part of the unit's model description shown in Table 1.

4.5. Connecting the High Voltage Output

> Ensure that the power supply is off and disconnected from the AC input power and that all load capacitors are discharged and shorted to ground before making any connections. Never handle the HV cable while the supply is operating. Never operate the supply without a load capacitor connected.

Before connecting the HV output cable, inspect the cable and check for signs of damage.

Always use the HV connector and cable provided with the power supply or an equivalent substitute provided by TDK-Lambda Americas. Fully insert the connector end of the HV cable and tighten the locking nut only "hand tight".

When operating above 20kV or 200Hz rep rate, silicone grease (such as Dow Corning DC-4) must be applied to the HV cable before insertion into the HV connector. The grease is used to displace air in the connector and reduce long-term corona effects. A cable greasing procedure is available for download from the TDK-Lambda Americas web site.

The load ground must be connected to the chassis ground through a separate safety ground cable with a minimum wire size of 10 AWG in addition to the HV output cable shield (see Figure 5).

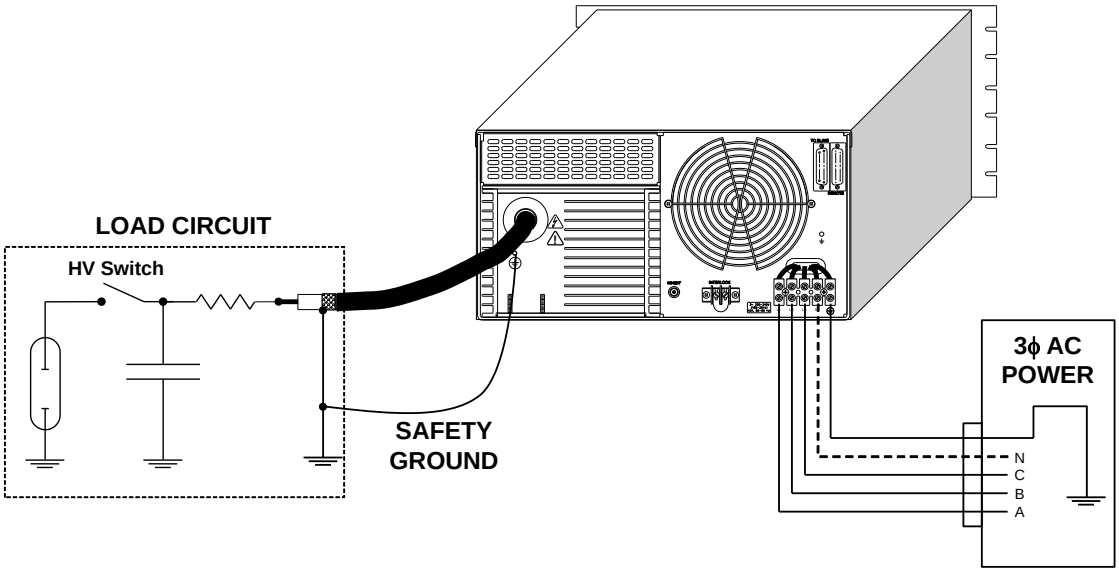

Figure 5 Typical Load Circuit Connection

Some peak current will flow out of the power supply during discharge and return through the HV return and system chassis. This current comes from voltage reversal in underdamped systems and from normal discharge of filter and cable capacitance. The path for this current should not parallel control signal returns since the resulting voltages could interfere with normal system operation.

Currents due to voltage reversal, particularly at high repetition rates can damage the power supply. Generally, a resistor in series with the HV output can be added to limit this current to an acceptable level, but an additional clamp diode may also be required.

Refer to Application Note 517 (available from the factory or at http://www.us.tdk-lambda.com/hp/product_html/high_volt.htm) for more detailed information.

Dress the high voltage cable to create a gentle curve ensuring there are no sharp bends as this will tend to reduce the cable's insulation strength. Strain relieve the load end of the high voltage cable to prevent breaking of, or damage to the center conductor. Keep the HV cables as distant as possible from the input power and the control signals.

To connect the HV cable to the load it is necessary to remove the cable jacket, shield, and any semiconducting layer (if applicable) that remains on the cable insulation after removing the shield.

The cable outer jacket should be removed to reveal the cable shield. At least 12” or 300mm of outer jacket should be removed for suitable voltage hold-off. The exposed shield should be trimmed to an appropriate length and terminated with a ground connection.

For models shipped with DS2214 HV cable (>40kV rated voltage), after the shield is removed, the black semiconducting layer is exposed. This layer should be very carefully removed using a sharp craft knife, and a peeling action. Once the semiconducting layer is removed, the exposed EPR insulation should be cleaned with IPA or an equivalent solvent. If any of the semiconducting layer remains on the HV cable insulation it may cause the cable termination to fail.

For models shipped with the DS2124 HV cable (<40kV rated voltage), there is no semiconducting layer to be removed from the cable insulation, however the exposed polythene cable insulation should be cleaned with IPA.

5. CONTROLS, INDICATORS, CONNECTORS

5.1. Front Panel Layout (L Model)

The 802L series power supply is equipped with a fully instrumented front panel featuring output voltage control, voltage and current metering, and comprehensive status LEDs, along with local/remote mode keyswitch, and power on switch. The 802L can be operated locally from the front panel or remotely via the control connector located on the rear panel (see Section 6.2). Front panel layout of the 802L power supply is shown in Figure 3 below.

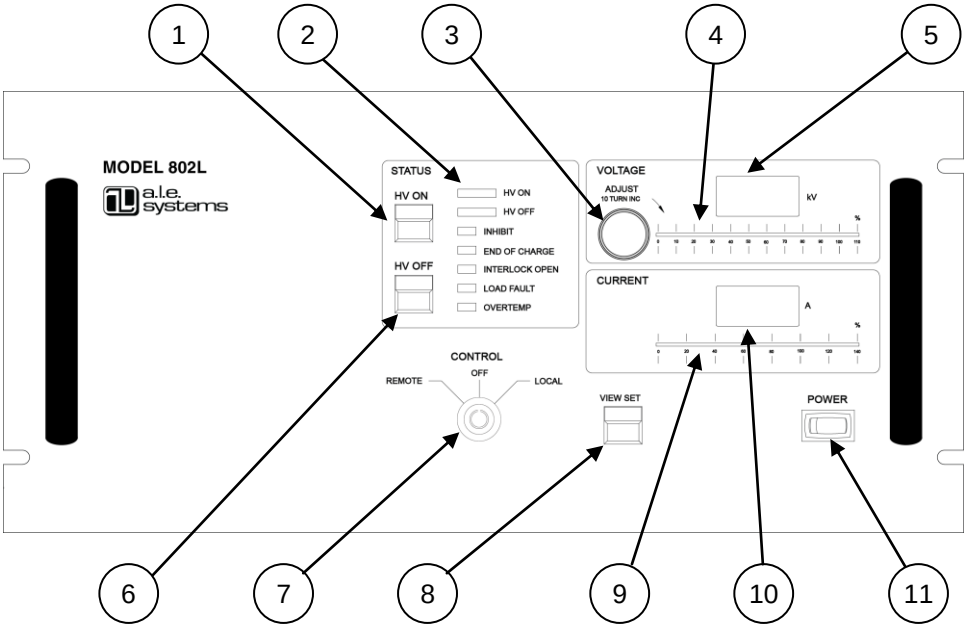

Figure 6 802L Front Panel Controls and Indicators

REF	DESCRIPTION	NOTE	SECTION
1	HV ON Push Button	Turns on HV output	5.2
2	Status LEDs	Indicates status of supply and presence of any faults	5.3
3	Local Voltage Set	10 turn pot for setting output voltage in local mode	5.4
4	Voltage bar graph	Analog bar graph showing output voltage (%)	5.5
5	Voltage Display	Digital display of output or set voltage	5.6
6	HV OFF Push Button	Turn off HV output	5.7
7	Off/Local/Remote Key	Switches control between remote, local, and off modes	5.8
8	View set push button	Push to view the output voltage set point in local mode	5.9
9	Current bar graph	Analog bar graph showing average output current (%)	5.10
10	Current Display	Digital display of average output current	5.11
11	Power switch	Turns on/off power to auxiliary circuits	5.12

Table 3 Front Panel Controls and Indicator Functions (L Model)

The front panel controls/indicators are described in detail in the following sections.

5.2. HV ON Push Button (Ref 1)

DO NOT DEPRESS THE HV ON PUSH-BUTTON UNLESS A SUITABLE CAPACITIVE LOAD IS CONNECTED TO THE POWER SUPPLY'S OUTPUT CABLE, AND THE LOAD IS CORRECTLY GROUNDED.

The HV ON push button is a momentary switch that when depressed turns on HV output in local mode (keyswitch in local position) only if there are no faults present within the supply. If faults are present when the HV ON button is pushed the supply **will not turn on**, and both the HV ON and HV OFF LEDs will illuminate. When both the HV ON and HV OFF LEDS are illuminated together this indicates a Summary Fault. If the keyswitch is in the remote position the HV ON push button has no function.

5.3. Status LEDs (Ref 2)

There are 6 status LEDs on the front panel, indicating the state of the HV Output circuit and various fault detection circuits in the control system.

5.3.1. HV ON LED

The HV ON LED indicates that the HV output circuit is enabled and the supply will deliver output current if it is not inhibited by an external inhibit input. If the HV ON and HV OFF LEDs are illuminated together this indicates a Summary Fault. HV ON LED is active in local and remote modes.

5.3.2. HV OFF LED

The HV OFF LED indicates that the HV output circuit is disabled and the supply cannot deliver output current. If the HV OFF and HV ON LEDs are illuminated together this indicates a Summary Fault. HV OFF LED is active in local and remote modes.

5.3.3. Inhibit LED

If the Inhibit LED is illuminated it indicates the presence of an active inhibit signal, and the supply will not deliver charging current after the HV ON button is pushed. Inhibit is applied either via the rear panel mounted BNC connector or either inhibit input via the remote control connector. Inhibit LED is active in local and remote modes.

5.3.4. END OF CHARGE LED

The END OF CHARGE or EOC LED indicates that the load or output voltage has reached the programmed voltage. EOC LED is active in local and remote modes.

5.3.5. Interlock Open LED

The interlock open LED illuminates if the safety interlock circuit is not closed. The power supply cannot be turned on if the interlock loop is open. If the interlock loop is opened when the unit is running (ie when HV in ON), the unit will turn off with a latching fault, requiring an HV ON/OFF/ON reset cycle before it can be restarted. Interlock Open LED is active in local and remote modes.

5.3.6. Load Fault LED

The load fault LED indicates the presence of a fault in the load circuit due to a short circuit large external capacitor, or an output Overvoltage. An output Overvoltage condition will cause a latching fault requiring an HV ON/OFF/ON reset cycle before it can be restarted. Load Fault LED is active in local and remote modes.

5.3.7. **Overtemp LED**

The overtemp LED indicates an inverter overtemperature condition internal to the supply. The temp fault will clear once the temperature is below the fault threshold, but the unit will not restart without a reset cycle. Overtemp LED is active in local and remote modes.

5.4. Local Voltage Set (Ref 3)

The local voltage set control is an analog 10-turn potentiometer for adjusting the output voltage from zero to full rated output. This control will only operate in local mode. If the supply is operated in remote mode the local voltage set control has no effect.

5.5. Voltage bar graph (Ref 4)

The voltage bar graph is a 'quick view' analog percentage indication of the voltage measured at the power supply output. Bar graph is active in local and remote modes.

5.6. Voltage Display (Ref 5)

The Voltage Display is a 4 digit LED indicator showing the voltage measured at the power supply output. This display momentarily shows the output program voltage after the View Set button is depressed. Voltage Display is active in local and remote modes.

5.7. HV OFF Push Button (Ref 6)

The HV OFF push button is a momentary switch that when depressed turns off HV output. If the power supply shuts off with a summary fault (indicated by HV ON and HV OFF LEDs both illuminated), then this condition can be reset by pushing the HV OFF, HV ON, HV OFF button sequence. If the supply is operated in remote mode the HV OFF push button will still function.

5.8. Off/Local/Remote Keyswitch (Ref 7)

DO NOT MOVE THE KEYSWITCH POSITION FROM OFF TO LOCAL OR REMOTE UNLESS A SUITABLE CAPACITIVE LOAD IS CONNECTED TO THE POWER SUPPLY'S OUTPUT CABLE, AND THE LOAD IS CORRECTLY GROUNDED.

The Off/Local/Remote Keyswitch switches the 802L power supply operating modes between OFF, LOCAL, and REMOTE. The key can be removed in the OFF position to prevent unauthorized use. If the switch is in the LOCAL position the supply will operate from the front panel. In the REMOTE position the supply can only be operated via the remote control interface. An L model supply can simulate an S or OEM model with the key in the REMOTE position.

5.9. View set push button (Ref 8)

The view set push button changes the reading on the digital voltage display from the power supply output voltage, to the programmed voltage set on the local voltage set potentiometer. After pushing this button the set voltage is displayed for approximately 3 seconds.

5.10. Current bar graph (Ref 9)

The current bar graph is a 'quick view' analog percentage indication of the average current delivered by the supply. Bar graph is active in local and remote modes.

5.11. Current Display (Ref 10)

The Current Display is a 4 digit LED indicator showing the average current delivered by the power supply output. Current display is active in local and remote modes.

5.12. Power switch (Ref 11)

The power switch connects AC input power to the control circuitry and causes the internal AC contactor to close if the interlock loop is closed.

5.13. Front Panel Layout (S Model)

The 802S series power supply is equipped with a partially instrumented front panel featuring status LEDs, and a power on switch. The 802S can only be operated remotely via the control connector located on the rear panel (see Section 6.2).

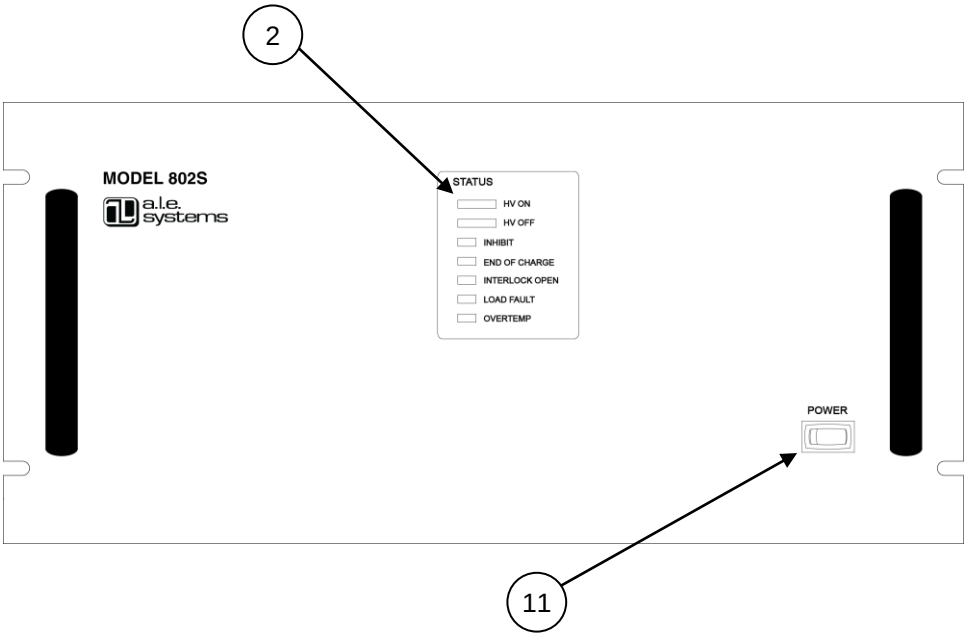

Figure 7 Front Panel Controls and Indicators (S Model)

REF	DESCRIPTION	NOTE	SECTION
2	Status LEDs	Indicates status of supply and presence of any faults	5.3
11	Power switch	Turns on/off power to auxiliary circuits	5.12

Table 4 Front Panel Controls and Indicators (S Model)

A description of the function of the LEDs and the power switch are given in sections 5.3 and 5.12 respectively.

5.14. Front Panel Layout (OEM Model)

The 802OEM front panel is completely blank and features no indicators or switches.

5.15. Rear Panel Layout (L Models)

All of the interconnect and HV connections for the 802L are located on the power supply rear panel.

Figure 8 shows the rear panel layout and location of the various connectors.

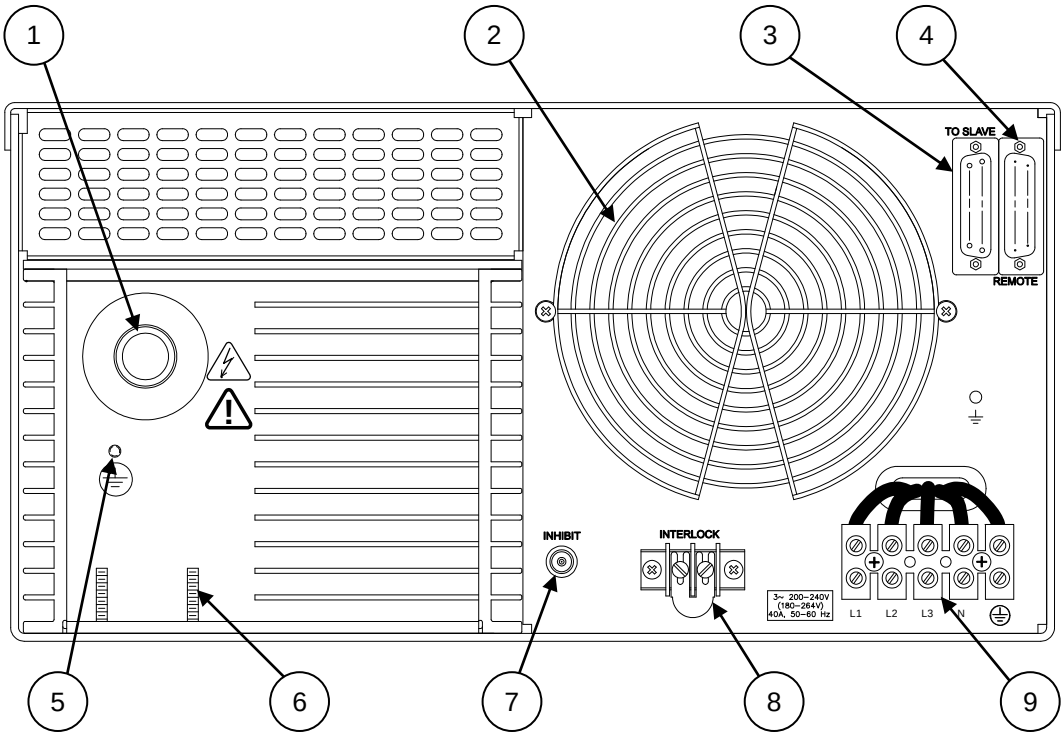

Figure 8 802L Rear Panel Connections

REF	DESCRIPTION	NOTE	SECTION
1	HV Output	HV Output connector, mates with supplied cable via proprietary connector	5.15.1
2	Cooling fan	Main AC cooling fan. Leave at least 4" clearance	5.15.2
3	Slave Interface	25pin male sub-D type plug for control of slave supplies in a parallel system (AMPHENOL 17BDFRA25P)	5.15.3
4	Remote Interface	25pin sub-D type receptacle for remote control of supply in remote mode (AMPHENOL 17BDFRA25S)	5.15.4
5	GND stud	10-32 UNC ground stud	5.15.5
6	GND stud	M5 ground stud (2 positions)	5.15.6
7	Inhibit input	BNC input to allow inhibit of output current	5.15.7
8	Interlock	Terminal for connection to interlock circuit. Contacts are isolated from ground and require dry contact closure for supply to operate.	5.15.8
9	AC Input	5 position terminal block for AC input power	5.15.9

Table 5 802L Rear panel Functions

The function of each item in Table 5 is described in the following sections.

5.15.1. **HV Output Connector (Ref 1)**

Connector socket for mating HV cable supplied with unit. The connector should be kept clean and free from debris at all times. If supply is operated at 20kV or 200Hz rep rate or above the cable should be greased to ensure corona free operation. The cable connector should only be hand tightened, never use a wrench or apply excessive force.

5.15.2. **Cooling Fan (Ref 2)**

Allow at least 4 inches of clearance and do not obstruct clear air flow around the fan. Cooling air exits through the rear of the unit, and enters through the side panels and around the HV tank.

5.15.3. **Slave Connector (Ref 3)**

A 25 pin D-sub female connector that allows connection to a slave supply for increased power operation.

5.15.4. **Remote Connector (Ref 4)**

A 25 pin D-sub male connector that allows remote operation and monitoring of all power supply functions when the unit is operated in REMOTE mode.

5.15.5. **Safety Ground (Ref 5)**

10-32UNC threaded safety ground stud installed in HV tank. Should be used for additional safety ground cable between supply and load circuit.

5.15.6. **Safety Ground (Ref 6)**

M5 threaded safety ground stud installed in HV tank. Should be used for additional safety ground cable between supply and load circuit.

5.15.7. **INHIBIT BNC (Ref 7)**

The inhibit BNC input is a standard BNC socket that allows an external connection to a pulse generator or control system and gives the user control of the power supply output current. A logic 1 (5-15V) input will inhibit the supply (shuts off the output current) and a logic 0 (ground or open) allows the supply to operate.

5.15.8. **Interlock Terminal strip (Ref 8)**

Provides an external dry contact connection for the customer to allow interlock functions to be controlled. The interlock terminals should be connected to any safety interlock circuitry in the power supply installation. When the interlock is open the AC line contactor disconnects the AC line from the power circuitry. The power supply is shipped with a factory installed shorting link across the interlock terminals.

NOTE

The Interlock terminals are chassis referenced 24VAC circuits and must never be connected to ground.

5.15.9. **AC Input Terminal (Ref 9)**

Main AC input power terminal block see section 4.4 for further details. For 200-240VAC connect three phases and ground. For 380-440VAC option connect three phases, Neutral and Ground. AC input is not phase rotation sensitive.

5.16. Rear Panel Layout (S Models)

The 802S rear panel is similar to the 802L except these is no SLAVE or INHIBIT BNC connector. If a number of units are to be connected in parallel, a daisy chain type ribbon cable should be used to connect the supplies together. See section 6.4 for more details.

Note:

The numbers in Figure 9 refer to Table 5.

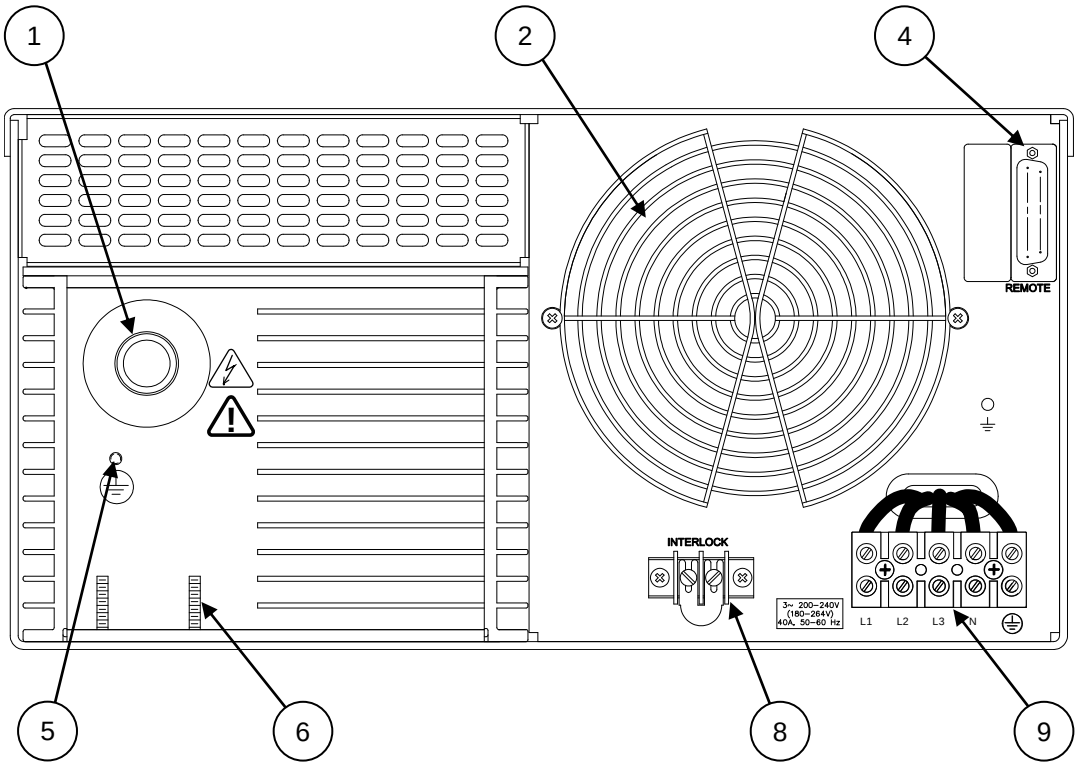

Figure 9 802S Rear Panel

5.17. Rear Panel Layout (OEM Models)

The 802OEM rear panel is similar to the 802S except there is no interlock terminal, unless the CT option is installed. If a number of units are to be connected in parallel, a daisy chain type ribbon cable should be used to connect the supplies together. See section 6.4 for more details.

Note:

The numbers in Figure 10 refer to Table 5.

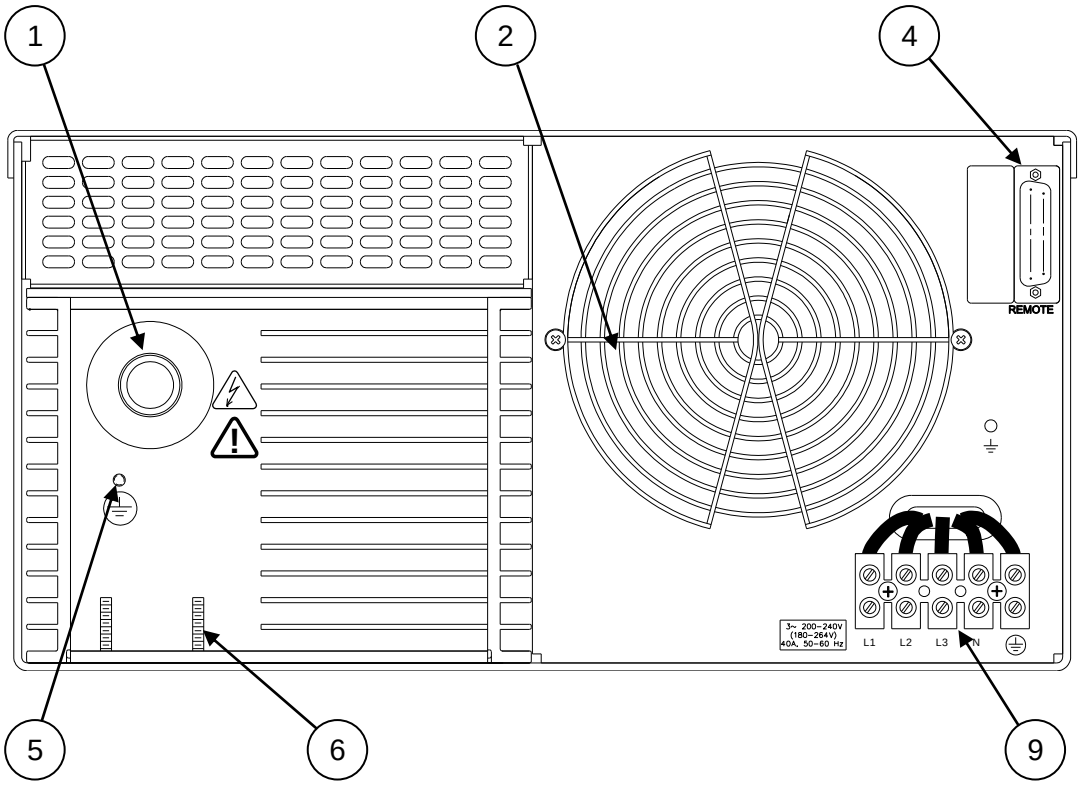

Figure 10 802OEM Rear Panel

5.18. REMOTE CONTROL CONNECTOR PIN DIAGRAM

Figure 11 shows a summary of the remote control signals on the connector labeled 4 in Figure 5 through 8. The connector is a 25-pin sub D-type receptacle (female).

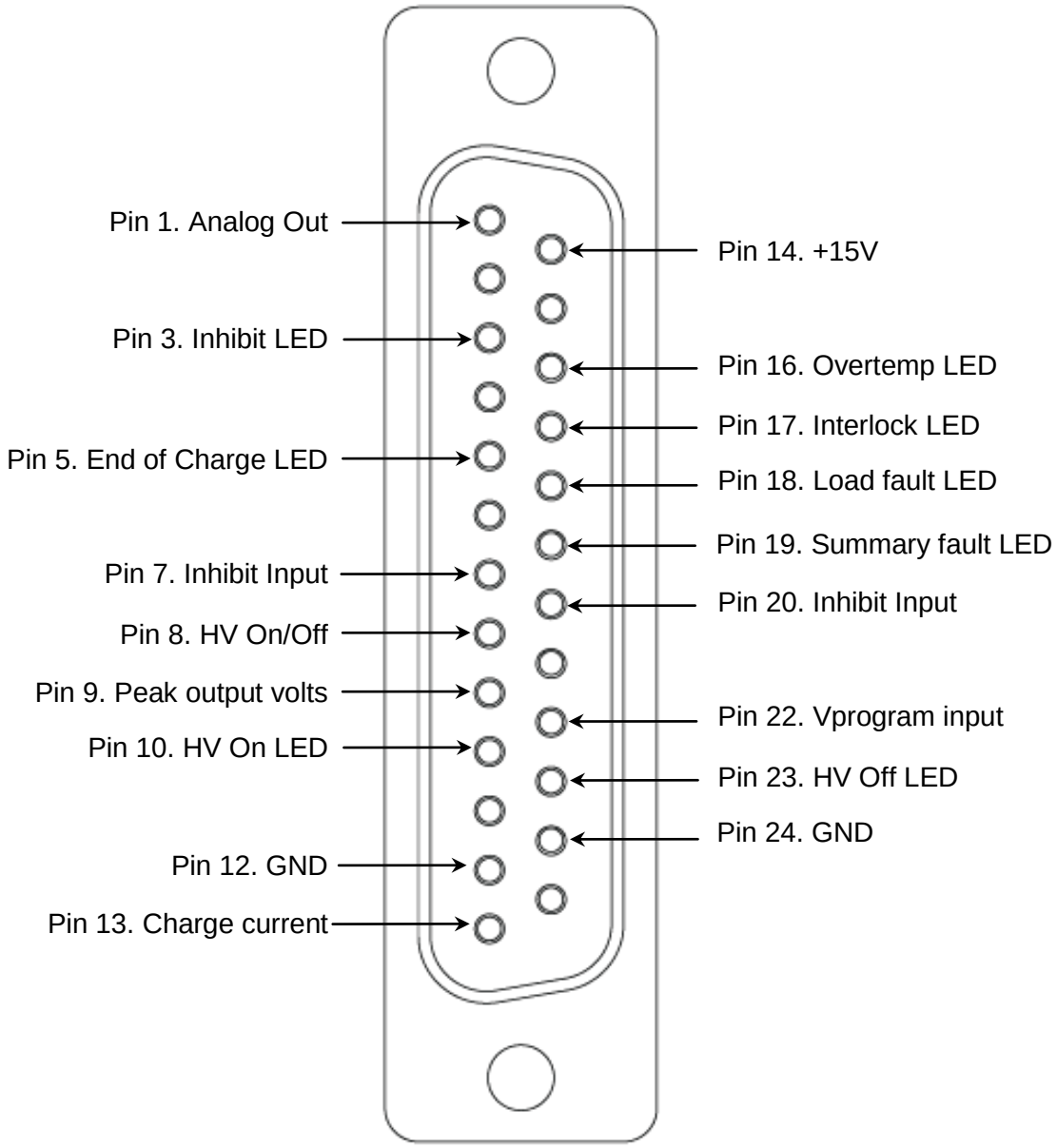

Figure 11 Remote Interface Connector and Signals.

Notes

6. OPERATING INSTRUCTIONS

The 802 power supply is designed for operation in two modes. The first mode is local, where the power supply can be controlled from the front panel. Local operation is only possible with the L model supply. The second mode is remote, where control signals are passed via the 25pin remote connector. Remote operation is possible with all 802 model power supplies (L, S, or OEM).

6.1. Local Operation (802L only)

The model 802L has full front panel instrumentation and controls for use in laboratory, prototype or OEM systems. The front panel controls include power on/off, remote/local and HV on/off switches, output voltage adjust, view set switch, digital voltage and current meters, quick reference bar graphs and status indicators. An internal AC contactor is included which is controlled by the front panel power switch and the interlock terminals located on the rear of the unit. A BNC connector is provided on the rear panel for easily connecting a pulsed INHIBIT signal when operating from the front panel. The model 802L can be operated as a "master" unit in parallel with several model 802S or OEM "slave" units for increased output power. Refer to Section 6.4 "Paralleling Units".

Before operating the power supply ensure a load capacitor is connected between the power supply output, and the other terminal of the capacitor is connected to ground or the appropriate point in the load circuit. Failure to correctly connect a capacitive load prior to operating the power supply may result in damage.

HIGH VOLTAGES MAY POTENTIALLY EXIST FROM THIS POINT FORWARD.

The power supply should be connected to 3 phase AC power as described in section 4.4. The interlock terminals should be closed either with the supplied shorting link or by an isolated external dry contact. Follow the steps below;

1. Ensure the output voltage potentiometer is turned fully counter clockwise.
2. Turn on the AC power switch, the cooling fan should start and the front panel indicators will illuminate.
3. Turn the control key to the local position.
4. Push the View Set button and turn the Voltage potentiometer until the required load voltage is displayed. The view set mode stays active for approximately 3 seconds before the voltage display reverts to the output voltage mode.
5. Push the HV ON button. The load will charge to the preset voltage and once this voltage is reached the End of Charge LED will illuminate. The supply will maintain this voltage until the HV OFF button is pushed, or the load capacitor is discharged via the HV switch in the load circuit.

After the load has been discharged the external Inhibit function can be used to shut down the power supply output current which aids in the HV switch recovery. Application of an inhibit signal will typically shut down the output current in approximately 15microseconds.

To turn OFF the power supply depress the HV OFF button, or use the Inhibit input to shut off the output current but leave the supply in the HV ON condition. Opening the interlock terminals will also cause the power supply to turn off. In this case the unit can only be turned back on after the interlock has been closed and the HV ON button depressed followed by the HV OFF button to RESET the fault. Any other fault occurring in the internal protection

circuitry will interrupt the power supply's operation causing it to turn OFF. For a full explanation of each control and indicator refer to Section 5.

6.2. Remote Operation (All models)

All 802 models are easily controlled through the 25 pin sub D-type remote interface connector located on the rear panel. The minimum required signals for remote control operation are; HV ON/OFF, Vprogram and GND. The remaining signals are provided for status monitoring and fault diagnosis, or more sophisticated control methodologies. The function each signal is shown in Table 6, with a schematic showing a suggested remote interface circuit shown in Figure 12.

Pin	Signal Name	I/O	Description
1	Analog Out	O	0-10V (±1%) Analog of output voltage waveform. Impedance 1kΩ. If the 5V option is installed the voltage level is 0-5V.
3	Inhibit LED	O	Open collector through 100Ω. Low impedance when INHIBIT signal applied.
5	End of Charge LED	O	Open collector through 100Ω. Low impedance when power supply reaches End of Charge.
7	Inhibit Input	I	5-15V Inhibits unit, open or ground allows operation. Input impedance >10kΩ. Note use either INHIBIT or $\overline{\text{INHIBIT}}$, never both signals. Do not use the INHIBIT BNC as well as the INHIBIT signal.
8	HV ON/OFF	I	15V=On, ground or open =Off. Also used to reset latching faults by cycling from On to Off. Input impedance >1MΩ. If the EN option is installed 15V=Off, Ground or open = On
9	Peak output volts	O	0-10V (±1%) Peak detector of output voltage waveform. Can be used to drive a meter displaying peak charging voltage. Impedance 10kΩ. If the 5V option is installed the voltage level is 0-5V.
10	HV ON LED	O	Open collector through 100Ω. Low impedance when HV output is enabled.
12	GND		Control circuit return. Also chassis/earth ground.
13	Charge current	O	Uncalibrated Analog of output current waveform. Impedance 10kΩ
14	+15V	O	+15V through 100Ω
16	Overtemp LED	O	Open collector through 100Ω. Low impedance when inverter overtemperature condition occurs.
17	Interlock LED	O	Open collector through 100Ω. Low impedance when external interlock circuit is open.
18	Load fault LED	O	Open collector through 100Ω. Low impedance when load fault condition occurs. Load fault is normally a non-latching fault and will self-reset after approximately 500ms, unless caused by an output overvoltage where the supply will latch off. For models with the LP option, an external RESET cycle is required to restart the unit.
19	Summary Fault LED	O	Open collector through 100Ω. Low impedance indicated a summary fault condition. Summary fault is a logical OR of Overvoltage, Overtemp, AC Line, and Open Interlock conditions.
20	$\overline{\text{Inhibit Input}}$	I	0V Inhibits unit, 15V or open allows operation. Input impedance >10 kΩ. Note use either INHIBIT or $\overline{\text{INHIBIT}}$, never both signals. Do not use the INHIBIT BNC as well as the INHIBIT signal.
22	Vprogram	I	0-10V = 0-100% of rated output voltage. Input impedance >1MΩ. If the 5V option is installed the voltage level is 0-5V.
23	HV OFF LED	O	Open collector through 100Ω. Low impedance when HV output is off/disabled.
24	GND		Control circuit return. Also chassis/earth ground.

Table 6 802 Remote Interface Description

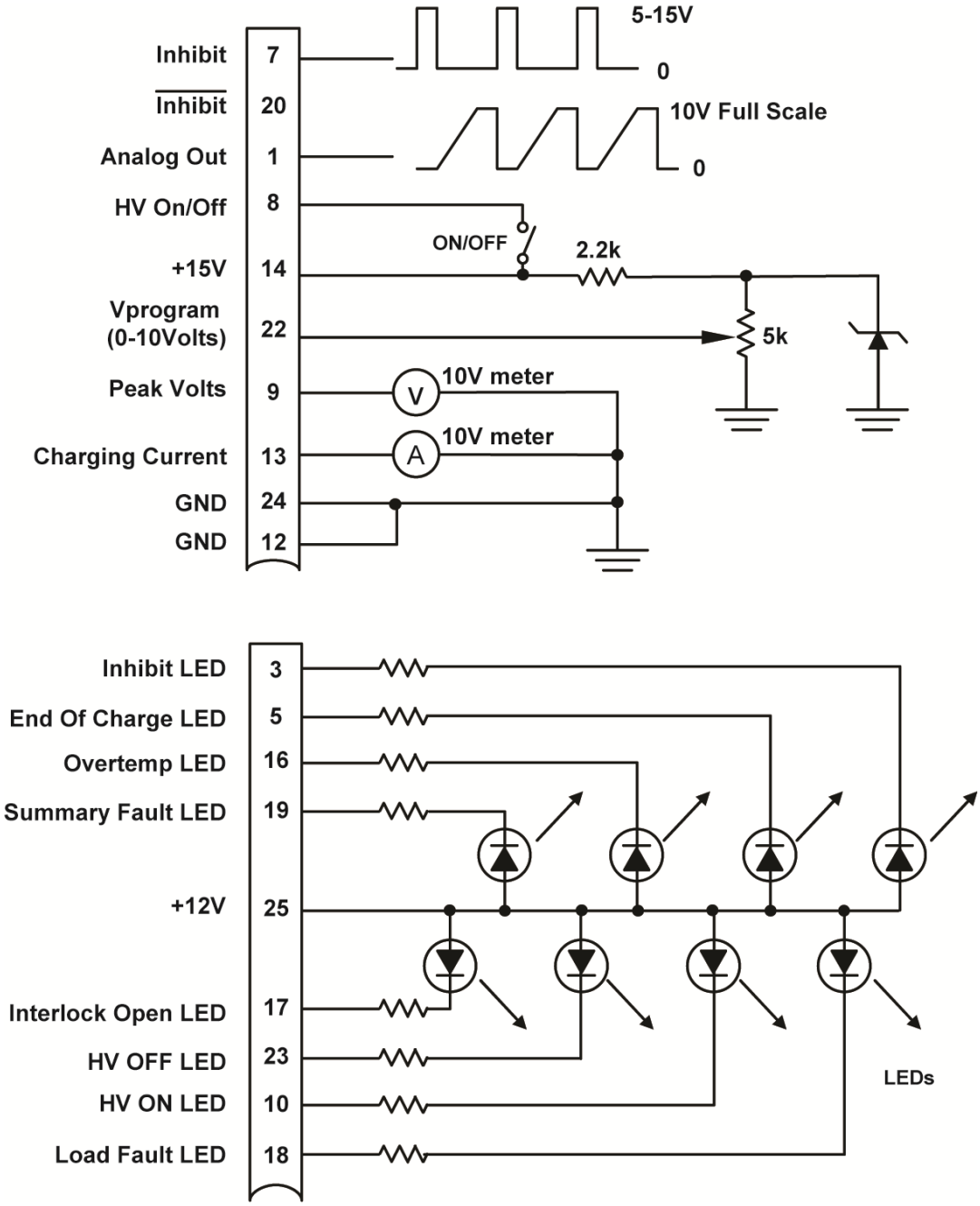

Figure 12 Suggested external remote interface circuit.

A detailed description of each remote control signal is given in the following sub-sections.

6.2.1. Analog Out

Pin 1. Analog of output voltage waveform as measured at the output terminals of the power supply. Signal is 0-10V +/-1% (0-5V if 5V option installed).

6.2.2. Inhibit LED

Pin 3. Open collector Active Low output indicating presence of an external Inhibit signal. Max rated voltage - 60V, 100Ω series resistance.

6.2.3. End Of Charge (EOC) LED

Pin 5. Open collector Active Low output indicating power supply output voltage has reached the programmed voltage or end of charge cycle. Max rated voltage - 60V, 100Ω series resistance.

6.2.4. Inhibit Input

Pin 7. 5-15V Inhibits unit (turns off output current), open or ground allows operation. Input impedance >10kΩ. Signal can be used to aid load switch recovery.

6.2.5. HV ON/OFF

Pin 8. +15V = HV ON, ground or open = HV OFF. Also used to reset latching faults by cycling from ON to OFF. Input impedance > 1MΩ. If EN option is installed +15V = OFF, Open or Ground = ON.

6.2.6. Peak Output Volts

Pin 9. Peak detector of Analog output voltage waveform. Can be used to drive a meter displaying peak charging voltage. Signal is 0-10V +/-1% (0-5V if 5V option installed).

6.2.7. HV ON LED

Pin 10. Open collector Active Low output indicating power supply output is ON/Enabled. Max rated voltage - 60V, 100Ω series resistance. If the HV ON and HV OFF signals are both active at the same time, this indicates a Summary Fault.

6.2.8. Ground

Pin 12. Control circuit return. Also chassis/earth ground.

6.2.9. Charge current

Pin 13. Analog of output current waveform. Signal is not calibrated.

6.2.10. +15V Output

Pin 14. +15V through 100Ω, maximum current is 20mA.

6.2.11. Overtemp LED

Pin 16. Open collector Active Low output indicating an inverter overtemperature condition has occurred. Once temperature has returned to normal levels this fault will clear, but the power supply will not restart without a Reset Cycle. Max rated voltage - 60V, 100Ω series resistance.

6.2.12. Interlock LED

Pin 17. Open collector Active Low output indicating the external interlock circuit is open. Max rated voltage - 60V, 100Ω series resistance.

6.2.13. Load Fault LED

Pin 18. Open collector Active Low output indicating a load fault condition. Load fault is a non-latching fault and will self-reset after approximately 500ms (for models without LP option). Load fault is caused by an output overvoltage condition (110% of rated voltage) or an output short circuit/large capacitor (load charges for 500ms without reaching programmed voltage). Max rated voltage - 60V, 100Ω series resistance.

6.2.14. Summary Fault LED

Pin 19. Open collector Active Low output indicating a summary fault condition. Summary fault is a logical OR of Overvoltage, Overtemp, AC Line, and Open Interlock conditions. Summary Fault is also indicated by both HV ON and HV OFF LEDs/indicators being illuminated at the same time. Max rated voltage - 60V, 100Ω series resistance.

6.2.15. Not Inhibit Input

Pin 20. Logical Inverse of Inhibit input (Pin 7), 0V Inhibits unit, 15V or open allows operation. User should control supply with either the Inhibit or Not Inhibit signal, both signals should not be used together. Input impedance >10kΩ.

6.2.16. Vprogram

Pin 22. 0-10V Analog Input = 0-100% of rated output voltage (0-5V if 5V option is installed). Input impedance >1MΩ.

6.2.17. HV Off LED

Pin 23. Open collector Active Low output indicating HV output is off/disabled. Max rated voltage - 60V, 100Ω series resistance.

6.2.18. Ground

Pin 24. Control circuit return. Also chassis/earth ground.

6.3. Remote Control Sequence

Note

The logic levels in the description below are for a supply without EN option. If EN is installed the logic levels for HV ON/OFF should be reversed.

Before operating either an 802L, S, or OEM in remote mode it must first be connected to a master supply, or an appropriate external control system. To operate a model 802L in remote mode the front panel keyswitch must be in the REMOTE position.

It is suggested that the INHIBIT signal is used in addition to the HV ON/OFF signal to control the output current of the power supply during the normal charge/discharge cycle. The INHIBIT signal should be asserted (Pin 7=5-15V) prior to activating the HV ON signal. Do not connect the INHIBIT BNC and the Inhibit signal on the remote interface, only the remote interface should be used in remote mode.

Once HV ON has been set (Pin 8=15V), then INHIBIT can be removed (Pin 7=0V), and the supply will begin charging the load. A few tens of microseconds before the load switch is triggered to close, the INHIBIT signal should be asserted to turn-off the output current, and aid in switch recovery.

After the load is discharged, and the HV switch has recovered to an insulating state, INHIBIT can be removed and the load re-charged. A typical set of remote control waveforms illustrating this sequence is shown in Figure 13.

There is no need to turn HV ON and OFF during the normal charge/discharge cycle, just use the INHIBIT signal to control the power supply. HV should be turned off (Pin 8=0V) as soon as the load circuit is no longer required to operate.

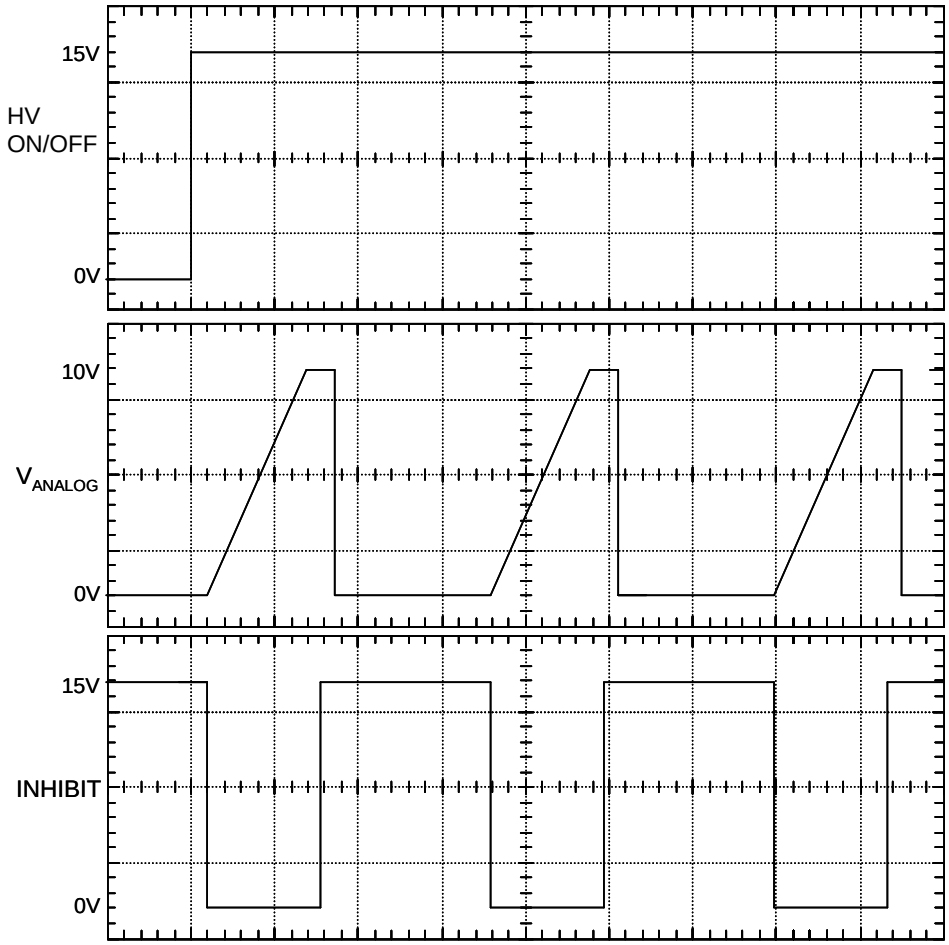

Figure 13 Typical remote Interface waveforms

The 802 supply can also be controlled without using the Inhibit signal (leaving Pin 7or 20 unconnected), and in this case the output current is immediately turned ON when the HV ON signal is activated assuming there are no faults present.

6.4. Parallel Operation

The 802 series capacitor charging power supplies are constant current sources, and can simply be connected in parallel for applications requiring increased power. Parallel supplies should have the same output voltage rating and programming options (if one unit has the 5V option, all others in parallel must have this option). Note that it is also possible to operate power supplies in parallel from different series (ie a model 802 in parallel with a model 402), but the user has to ensure the remote interface connections are compatible.

To operate more than one unit in parallel all that is required is a parallel control cable, and to connect the HV output cables together at the load. The output currents from the parallel supplies simply add together to increase the overall system current. Any model 802 supply, or any combination of units can be operated in parallel. If at least one model 802L is connected in a parallel system then the system can be operated without an external controller by using the 802L as a master supply in local mode.

If status, voltage, and current displays/measurements are required individually for each supply in a parallel system then the ‘daisy chain’ control cable is not appropriate, and each unit must be individually connected to a remote control system.

6.4.1. Parallel system comprising 802L supplies

If all of the parallel units are L model supplies then one unit should be operated as the master supply in either local or remote mode. The other parallel supplies can be connected to the SLAVE 25-pin D-sub connector on the master unit rear panel (refer to Figure 14). The SLAVE control cable can be a pin-to-pin ribbon or other cable that is ‘daisy chained’ to the REMOTE connector on each of the SLAVE supplies. Note: The master 802L supply in a parallel system only displays the status, voltage, and current output for that unit, not for the entire system. The slave supplies will also display the voltage and current only for that specific unit.

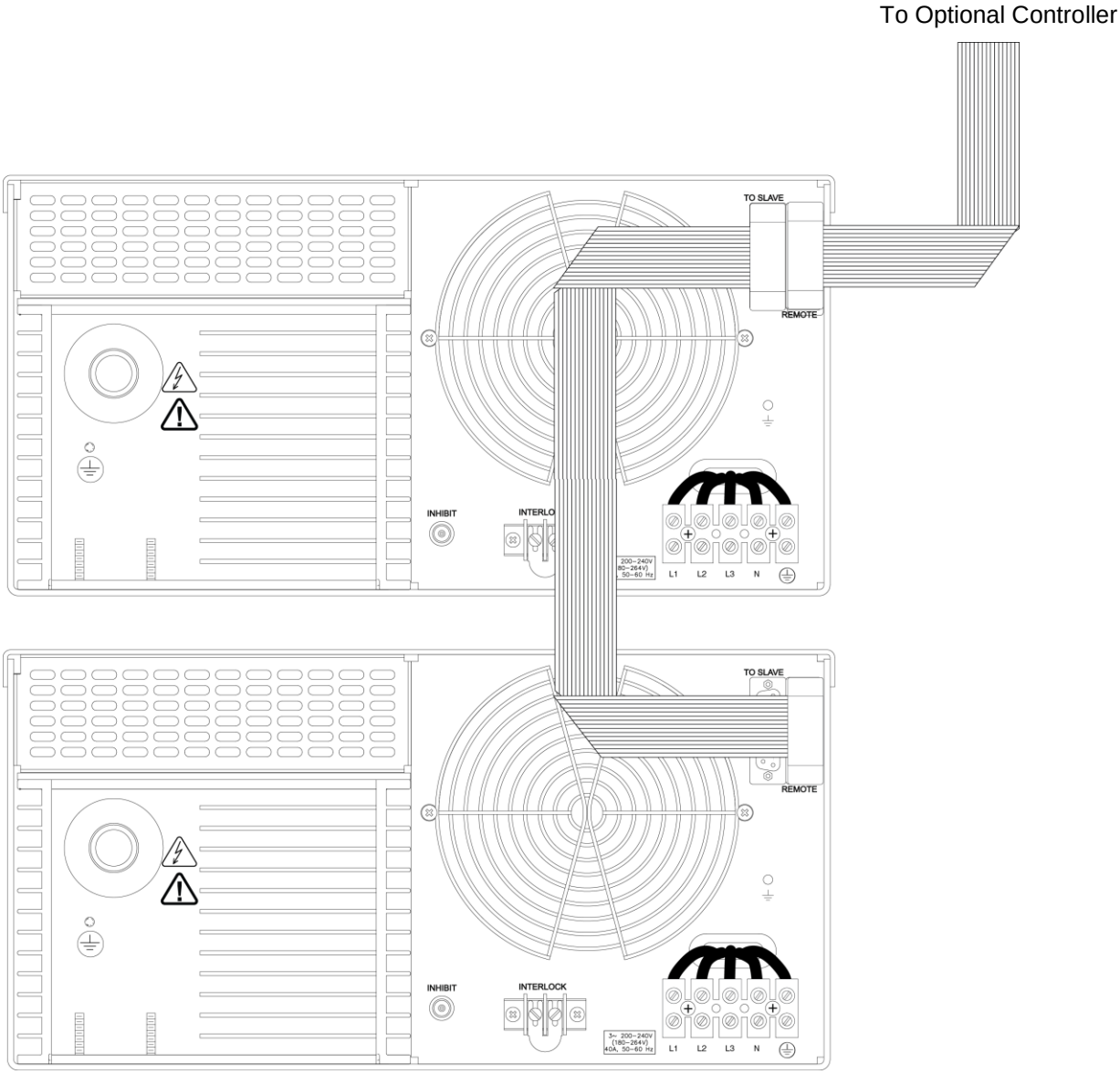

Figure 14 802L Parallel System Control Connections.

6.4.2. Parallel system comprising both 802L and 802S or OEM supplies

For a system comprising both 802L and S/OEM units, a single L model should be operated as a master in either local or remote mode. The other parallel supplies can be connected to the SLAVE 25-pin D-sub connector on the master unit rear panel (refer to Figure 15). The SLAVE control cable can be a pin-to-pin ribbon or other cable that is ‘daisy chained’ to the REMOTE connector on each of the SLAVE supplies.

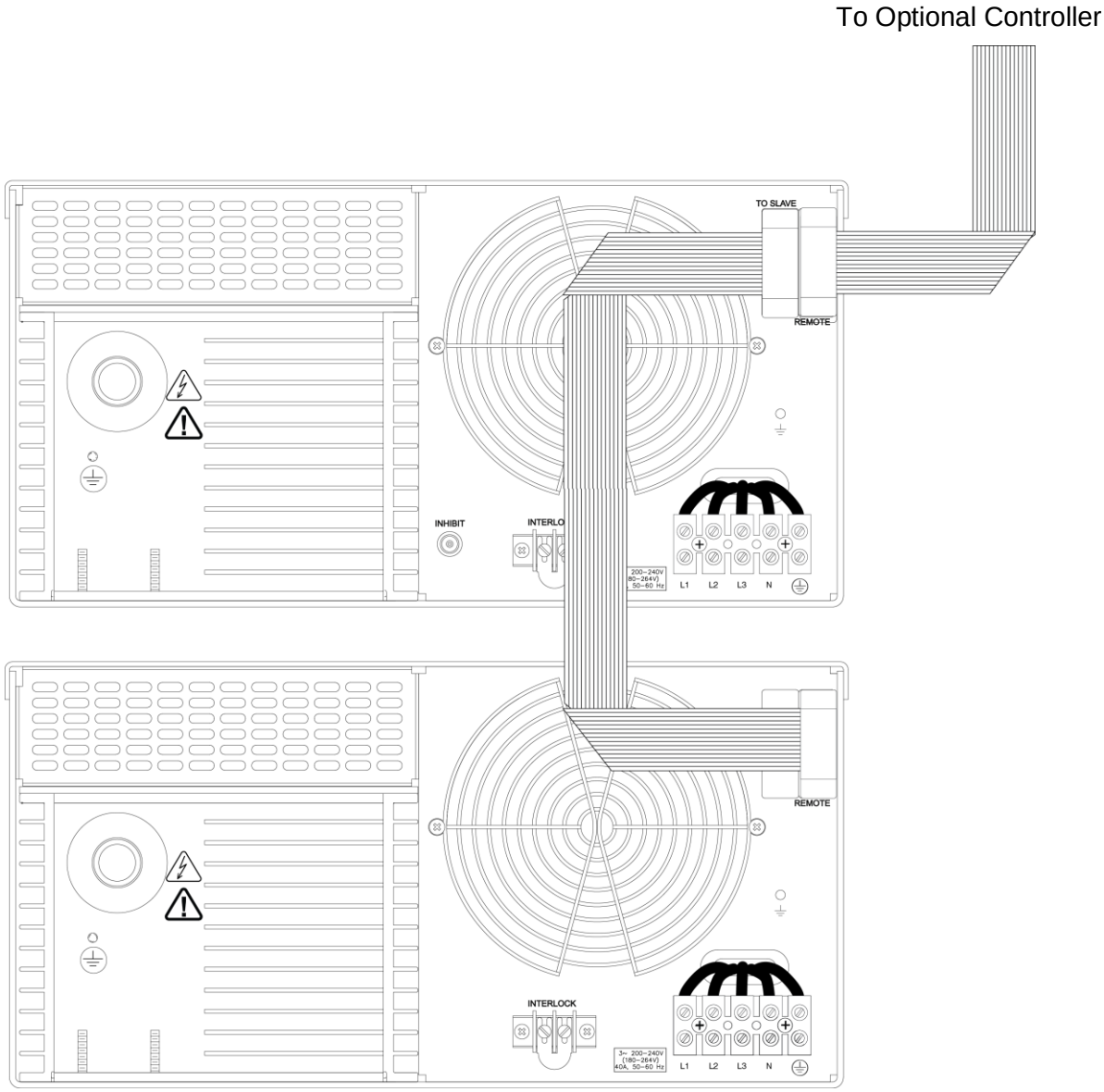

Figure 15 802L and 802S/OEM Parallel System control Connections.

6.4.3. Parallel system comprising 802S/OEM supplies

A system comprising only model 802S/OEM supplies must be operated from an external control system. The control system should be connected using a pin-to-pin ribbon or other cable that is ‘daisy chained’ to the REMOTE connector on each of the 802S/OEM supplies in the system. A sketch is shown in Figure 16.

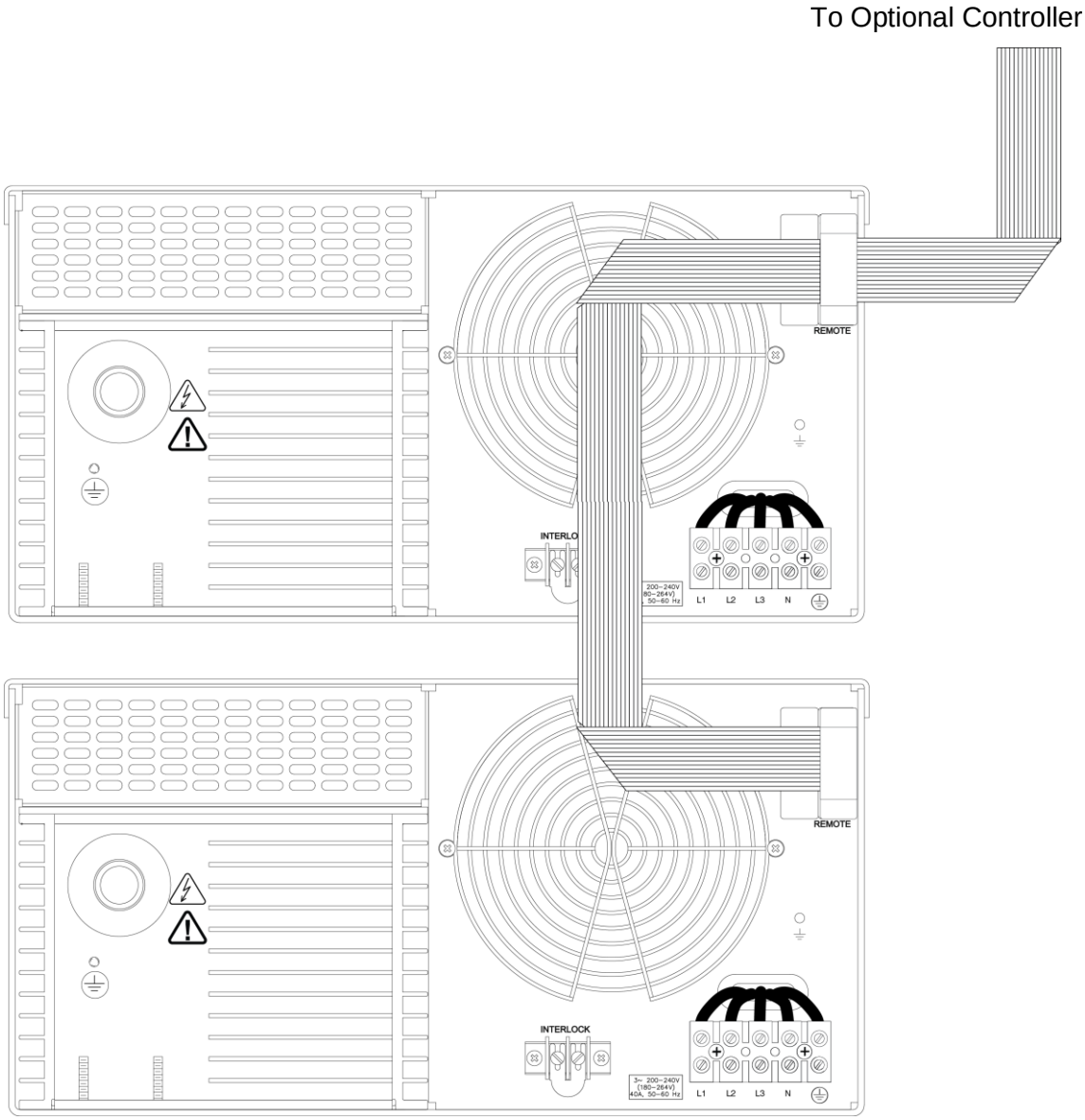

Figure 16 Parallel Operation Connections for 802S/OEM Supplies

Notes

7. APPLICATION NOTES

The 802 series power supplies are high voltage power sources and great care should be taken when connecting and operating these units. In order to aid installation and system design, a number of application notes have been produced to support the design engineer with certain load circuit component rating and selection. The latest versions of these application notes are available for download at the TDK-Lambda High Power web site (http://www.us.tdk-lambda.com/hp/product_html/high_volt.htm).

The following App Notes were available at the time this manual was produced. These documents are continually being improved and expanded, so always check for the latest revision on-line.

APP Note 500: Calculating Capacitor Charge Time

APP Note 502: Calculating AC Line Currents

APP Note 505: Charging units as Continuous Output DC Supplies

APP Note 507: Charging Large Load Capacitors

APP Note 509: What is Regulation and Repeatability?

APP Note 513: Power Factor Correction

APP Note 517: Protection Against Voltage Reversal

If there are any other application issues or questions that are not covered in these Application Notes, or elsewhere in this manual, please do not hesitate to contact the factory and our team of experienced HV application engineers.

Contact the Factory – We are here to help!

Tel: +1 732 922 9300 x229

Fax: +1 732 922 1441

THIS IS A COMPUTER GENERATED DWG.
NO MANUAL REVISIONS ARE PERMITTED.

APPLICATION			LTR	E.C.O. NO.	BY	APP.
USED ON	NEXT ASSY.	QTY.	00	RELEASE ECO 304 10/90	JT	
802-L	003-0274		01	ECO #320 4/91	JT	
			A	TG 3 REL. 10/20/95	CJS	
			B	ECO #16288 6/18/97	CJS	

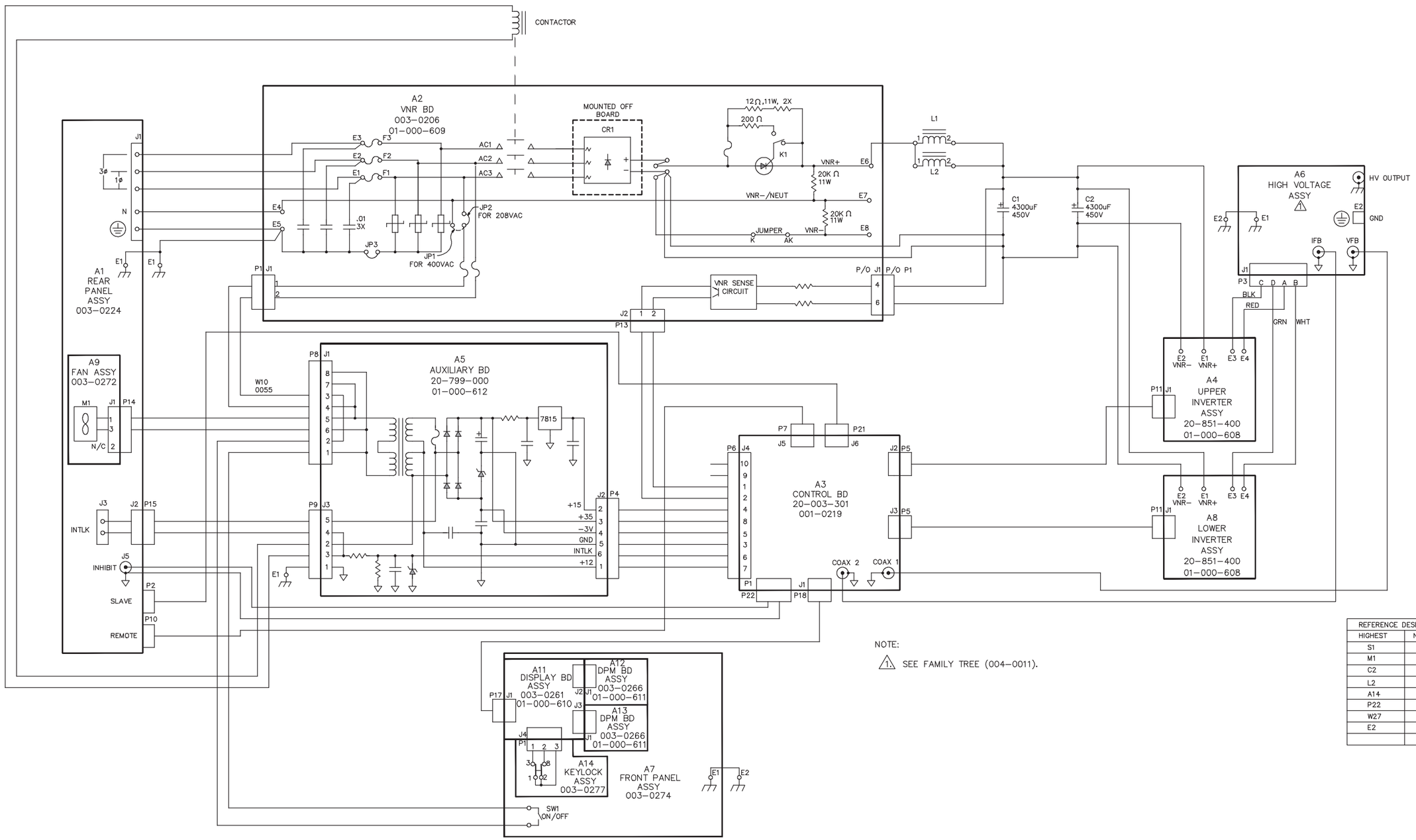

NOTE:

1. SEE FAMILY TREE (004-0011).

REFERENCE DESIGNATIONS	
HIGHEST	NOT USED
S1	
M1	
C2	
L2	
A14	
P22	
W27	W24
E2	

SHEET 1 OF 1

MTL:	TOL: .X = ± .02" .XX = ± .01" .XXX = ± .005" FRAC. = ± 1/64" ANGLES = ± 1/2°	REL. TO MFG. PRJ. ENG. DATE: / MFG: DATE: / DOC. REL. DATE:	ENG. CTL. DWN: TURCOTTE DATE: 4/90 / CHK: B.WEAVER DATE: 10/90 / APP: DATE: 6/9/95	ELECTRONIC MEASUREMENTS, INC.
FIN:	P/L: 488			TITLE: SCHEMATIC 802L 208V AC SYSTEM
	SCALE: NONE	DO NOT SCALE DWG.	APP: DATE: 6/9/95	DWG. NO. 001-0108 REV. B

THIS IS A COMPUTER GENERATED DWG.
NO MANUAL REVISIONS ARE PERMITTED.

APPLICATION			LTR	E.C.O. NO.	BY	APP.
USED ON	NEXT ASSY.	QTY.	00	REL. ECO# 304 10/90	JT	
003-0234	802-S		01	ECO# 320 4/91	JT	
			A	ECO #16288 6/16/98	CJS	

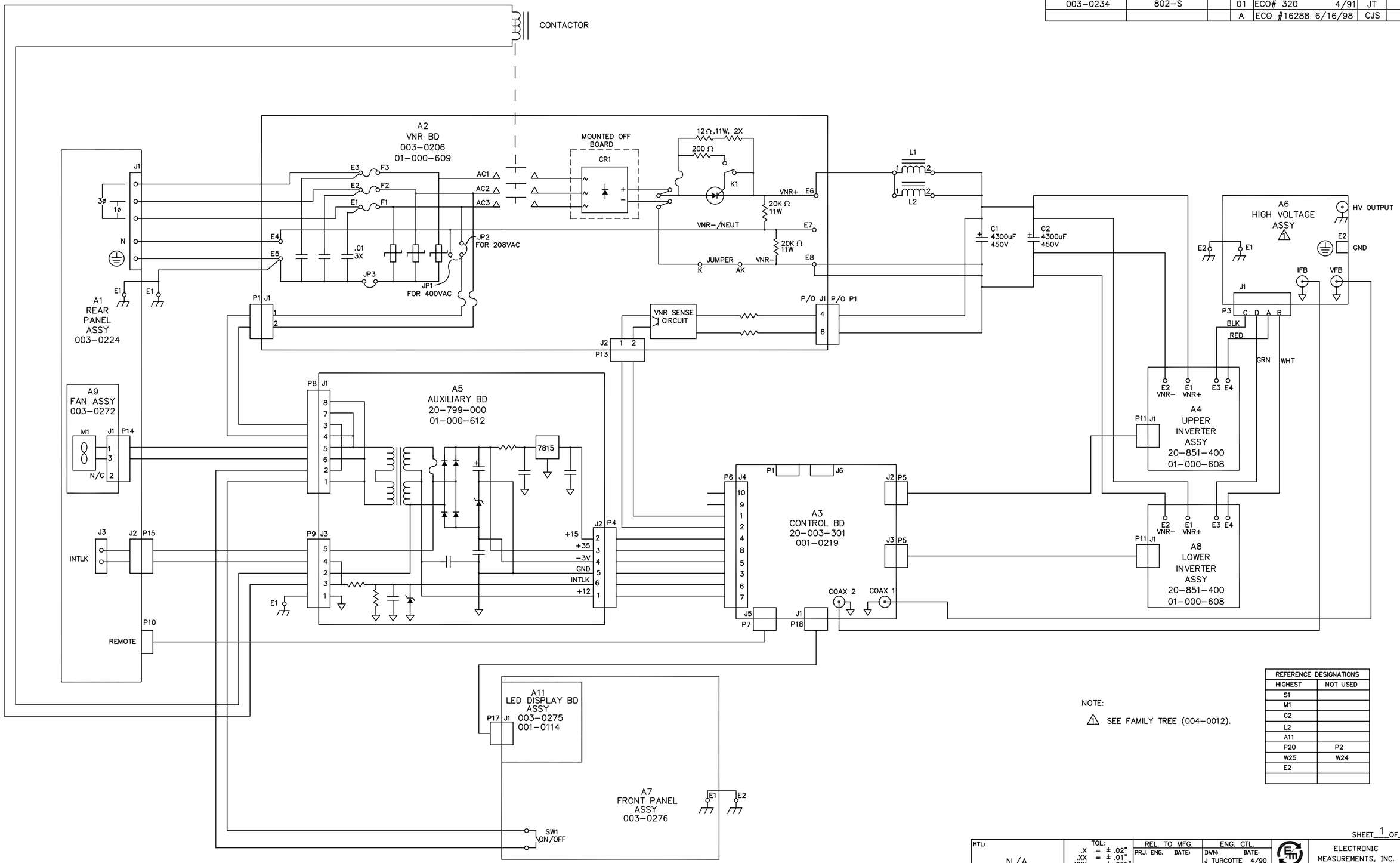

NOTE:

1. SEE FAMILY TREE (004-0012).

REFERENCE DESIGNATIONS	
HIGHEST	NOT USED
S1	
M1	
C2	
L2	
A11	
P20	P2
W25	W24
E2	

SHEET 1 OF 1

MTL: N/A	TOL: .X = ± .02" .XX = ± .01" .XXX = ± .005" FRAC. = ± 1/64" ANGLES = ± 1/2°	REL. TO MFG. PRJ. ENG. DATE: MFG: DATE:	ENG. CTL. DWN: J TURCOTTE DATE: 4/90 CHK: B.WEAVER DATE: 10/90	ELECTRONIC MEASUREMENTS, INC.
FIN: N/A	P/L: 488	DOC. REL. DATE:	ENG: DATE:	TITLE: SCHEMATIC 802S 208V AC SYSTEM
	SCALE: N/A	DO NOT SCALE DWG.	APP: DATE:	DWG. NO. 001-0112 REV. A

THIS IS A COMPUTER GENERATED DWG.
NO MANUAL REVISIONS ARE PERMITTED.

APPLICATION			LTR	E.C.O. NO.	BY	APP.
USED ON	NEXT ASSY.	QTY.	00	REL. ECO #301 7/90	JT	
802-OEM LV AC	003-0230		01	ECO #320 7/90	JT	
			A	TG 3 REL. 8/24/94	CJS	

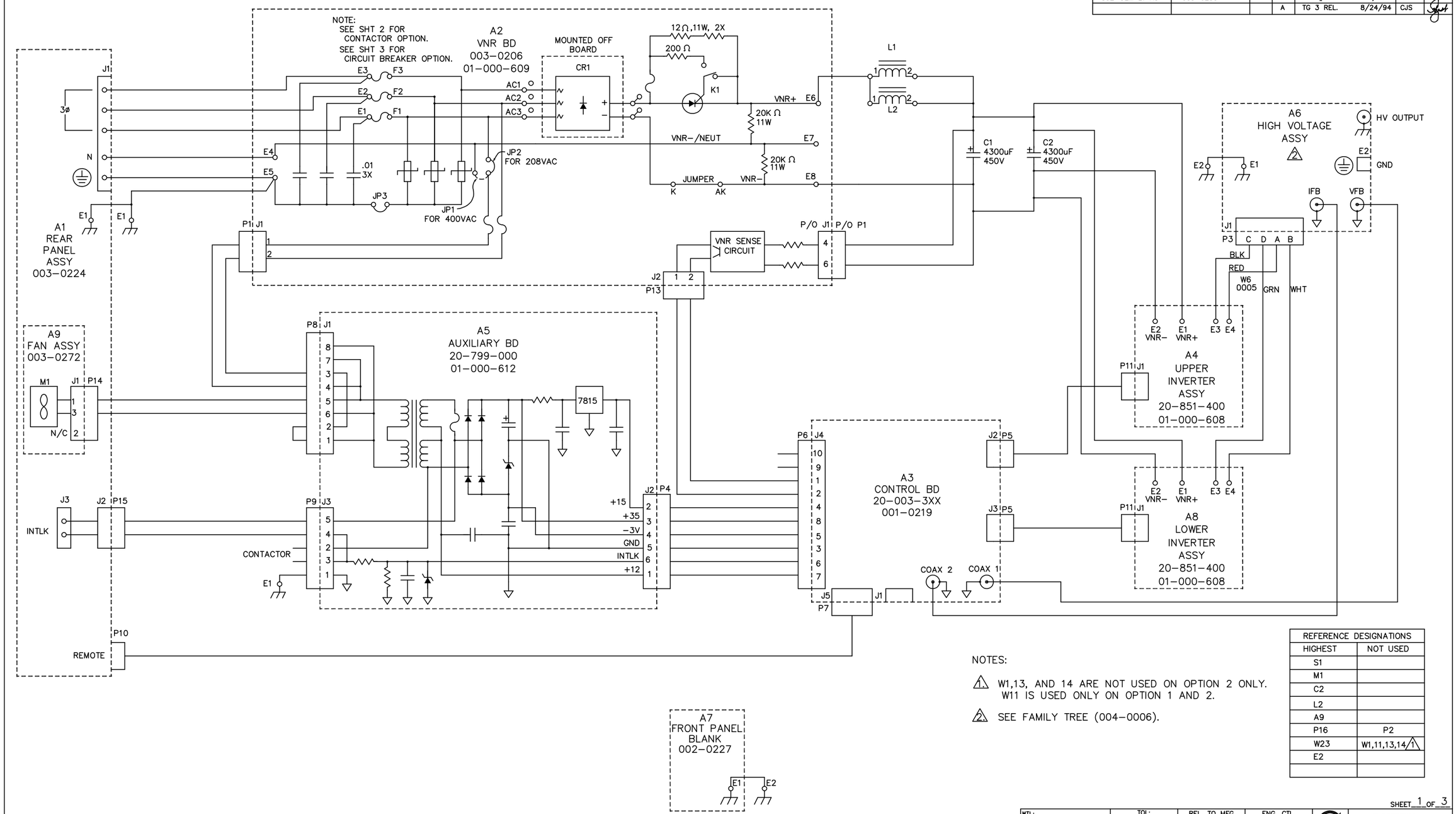

NOTES:

1. W1,13, AND 14 ARE NOT USED ON OPTION 2 ONLY. W11 IS USED ONLY ON OPTION 1 AND 2.
2. SEE FAMILY TREE (004-0006).

REFERENCE DESIGNATIONS	
HIGHEST	NOT USED
S1	
M1	
C2	
L2	
A9	
P16	P2
W23	W1,11,13,14 (1)
E2	

SHEET 1 OF 3

MTL:	TOL: .X = ± .02" .XX = ± .01" .XXX = ± .005" FRAC. = ± 1/64" ANGLES = ± 1/2°	REL. TO MFG. PRJ. ENG. DATE: MFG: DATE:	ENG. CTL. DWN: TURCOTTE DATE: 4/90 CHK: B.WEAVER DATE: 10/90	ELECTRONIC MEASUREMENTS, INC.
FIN:	P/L: 487 SCALE: N/A	DOC. REL. DATE: 10/13/95 DO NOT SCALE DWG.	ENG. DATE: 6/17/94 APP: DATE: 6/17/94	TITLE: SCHEMATIC 802-OEM 208V AC SYSTEM DWG. NO. 001-0103 REV. A

THIS IS A COMPUTER GENERATED DWG.
NO MANUAL REVISIONS ARE PERMITTED.

APPLICATION			LTR	E.C.O. NO.	BY	APP.
USED ON	NEXT ASSY.	QTY.	00	RELEASE ECO #301 7/90	JT	
802-OEM LV AC	003-0230		01	ECO #320 7/90	JT	
			A	TG 3 RELEASE 8/24/94	CJS	

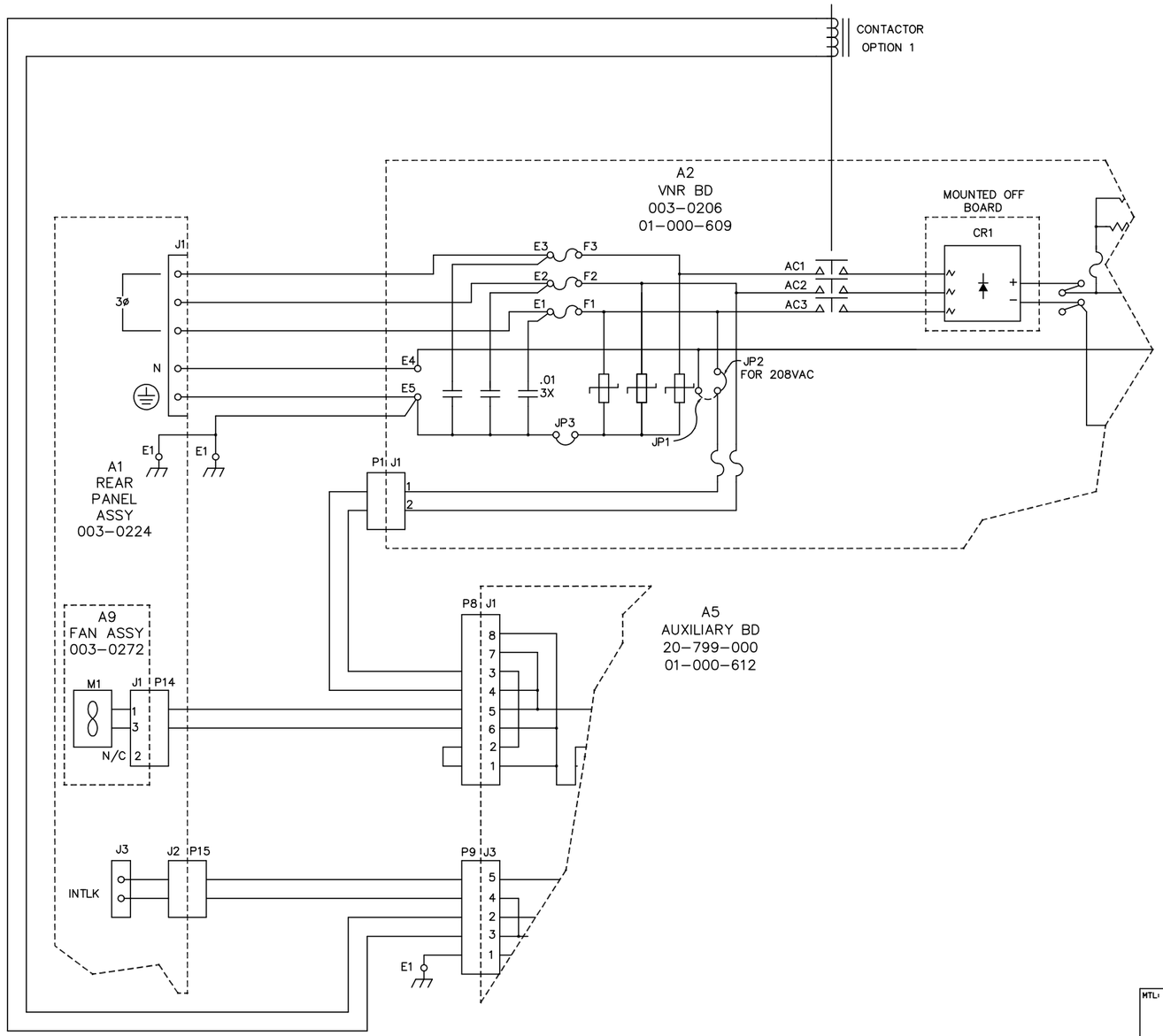

OPTION 1

802 OEM VERSION WITH CONTACTOR

SHEET 2 OF 3

MTL:	TOL: .X = ± .02" .XX = ± .01" .XXX = ± .005" FRAC. = ± 1/64" ANGLES = ± 1/2°	REL. TO MFG. PRJ. ENG. DATE: MFG: DATE:	ENG. CTL. DWN: TURCOTTE DATE: 4/90 CHK: DATE: 6/17/94	ELECTRONIC MEASUREMENTS, INC.
FIN:	P/L: 487	DOC. REL. DATE: 10/13/95	ENG: DATE: 6/17/94	TITLE: SCHEMATIC 802-OEM 208V AC SYSTEM
	SCALE: N/A	DO NOT SCALE DWG.	APP: DATE: 6/17/94	DWG. NO. 001-0103 REV. A

THIS IS A COMPUTER GENERATED DWG.
NO MANUAL REVISIONS ARE PERMITTED.

APPLICATION			LTR	E.C.O. NO.	BY	APP.
USED ON	NEXT ASSY.	QTY.	00	RELEASE ECO #301 7/90	JT	
802-OEM LV AC	003-0230		01	ECO #320 7/90	JT	
			A	TG 3 REL. 8/24/94	CJS	

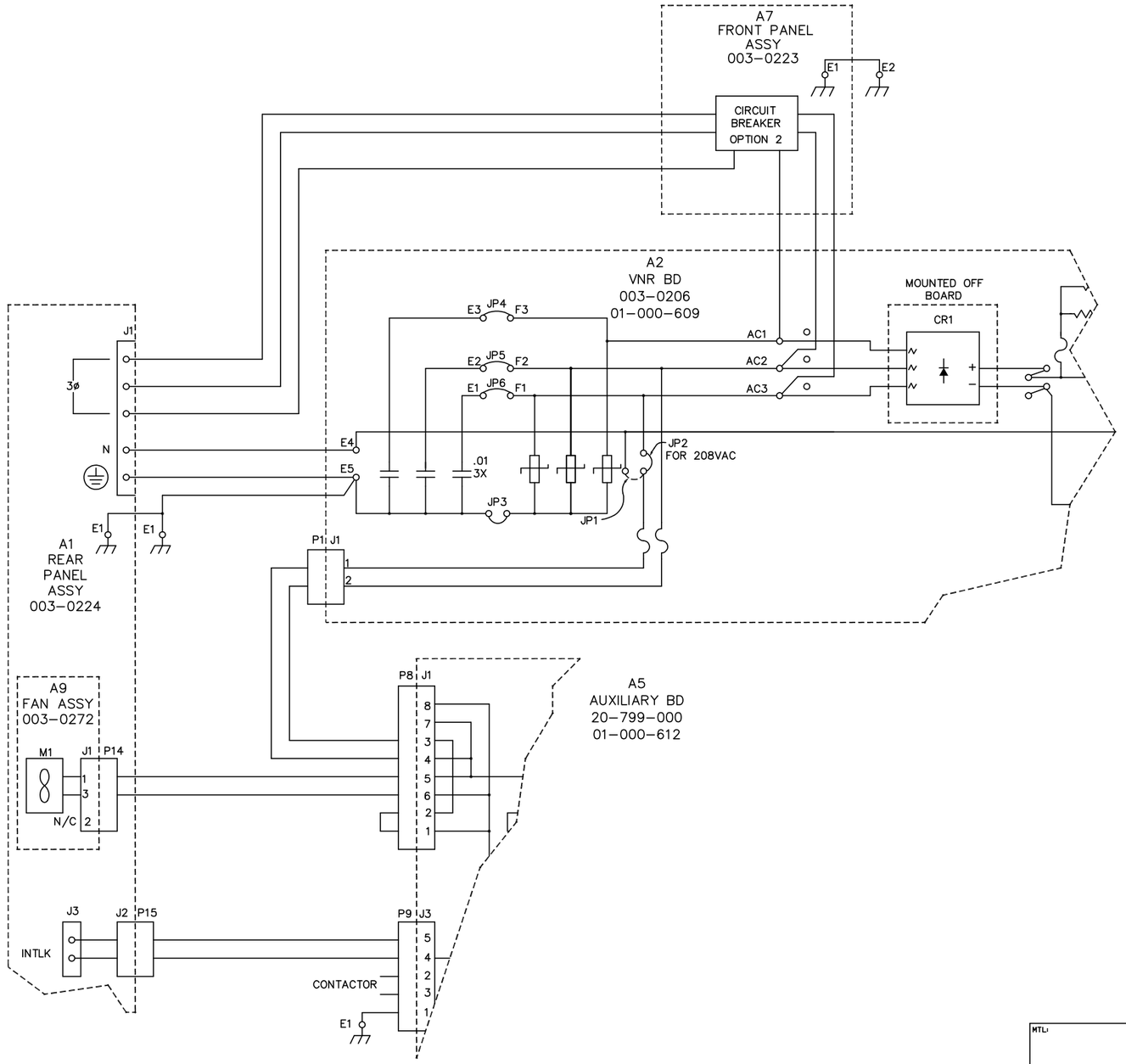

OPTION 2

802 OEM VERSION WITH CIRCUIT BREAKER
AND WITHOUT FUSES.

SHEET 3 OF 3

MTL:	TOL: .X = ± .02" .XX = ± .01" .XXX = ± .005" FRAC. = ± 1/64" ANGLES = ± 1/2°	REL. TO MFG. PRJ. ENG. DATE:	ENG. CTL. DWN: TURCOTTE DATE: 4/90	ELECTRONIC MEASUREMENTS, INC.	
		MFG: DATE:	CHK: DATE: 6/17/94	TITLE: SCHEMATIC 802-OEM 208V AC SYSTEM	
FIN:	P/L: 487	DOC. REL. DATE: 10/13/95	ENG: DATE: 6/17/94		
	SCALE: N/A	DO NOT SCALE DWG.	APP: DATE: 6/17/94	DWG. NO. 001-0103	REV. A

THIS IS A COMPUTER GENERATED DWG.
NO MANUAL REVISIONS ARE PERMITTED.

APPLICATION			LTR	E.C.O. NO.	BY	APP.
USED ON	NEXT ASSY.	QTY.	1	INT REL 2/9/96		
802-L	FINAL	REF	A	TG REL 6/19/96	CJS	

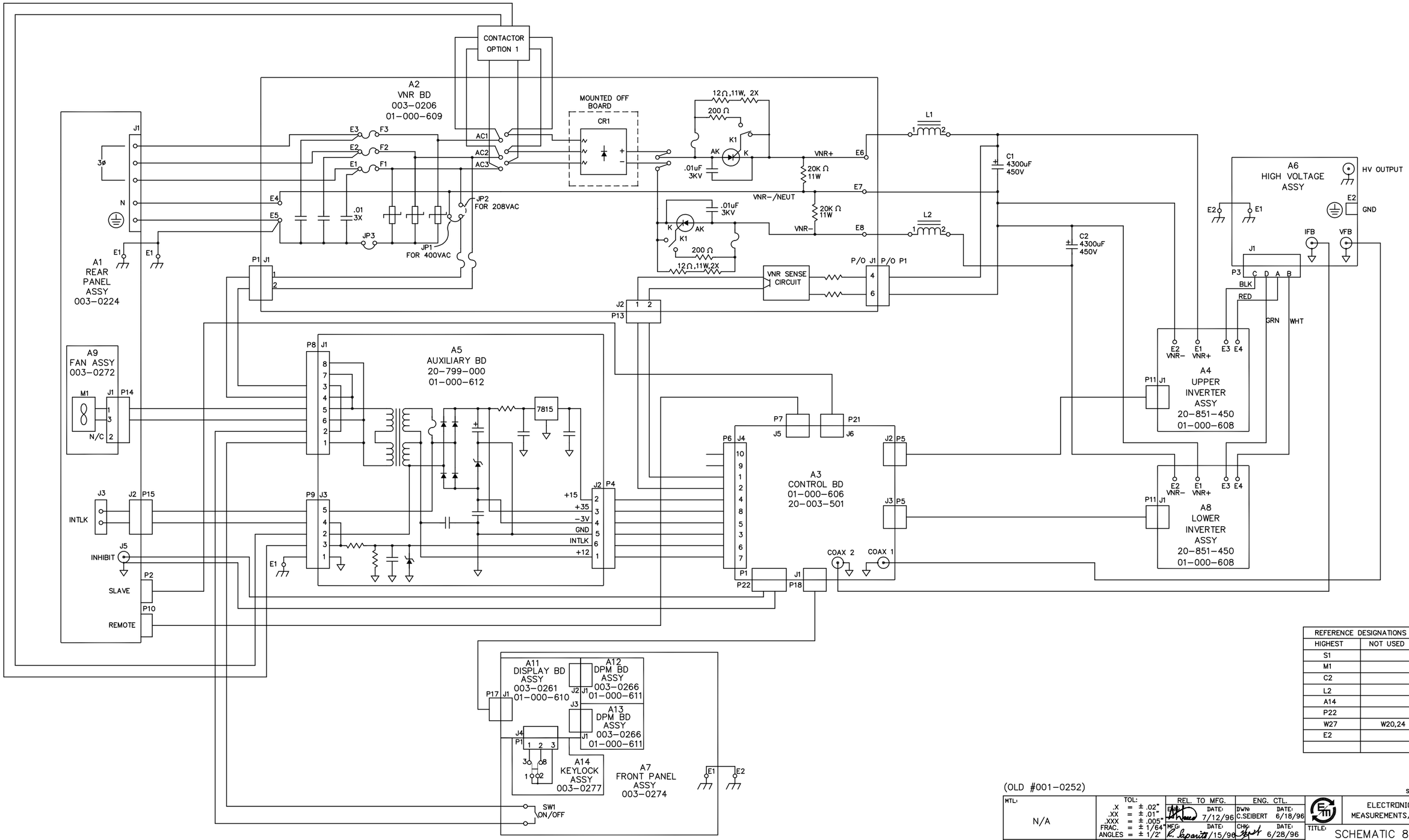

REFERENCE DESIGNATIONS	
HIGHEST	NOT USED
S1	
M1	
C2	
L2	
A14	
P22	
W27	W20,24
E2	

(OLD #001-0252)

SHEET 1 OF 1

MTL: N/A	TOL: .X = ± .02" .XX = ± .01" .XXX = ± .005" FRAC. = ± 1/64" ANGLES = ± 1/2°	REL. TO MFG. DRN: DATE: 7/12/96	ENG. CTL. DWN: C.SEIBERT DATE: 6/18/96	ELECTRONIC MEASUREMENTS, INC.
		MFG: DATE: 7/15/96	CHK: DATE: 6/28/96	TITLE: SCHEMATIC 802L 400VAC SYSTEM
FIN: N/A	P/L: 488	DOC. REL. DATE: 6/28/96	APP: DATE: 7/12/96	
DO NOT SCALE DWG.	SCALE: NONE	CHK: DATE:	APP: DATE: 6/28/96	DWG. NO. 01-488-016 REV. A

THIS IS A COMPUTER GENERATED DWG.
NO MANUAL REVISIONS ARE PERMITTED.

APPLICATION			LTR	E.C.O. NO.	BY	APP.
USED ON	NEXT ASSY.	QTY.	00	REL ECO #320 4/91	JT	
802S	003–0350		1PB	REV.01 PENDING 4/92	JT	
			A	ECO #16288 6/16/97	CJS	

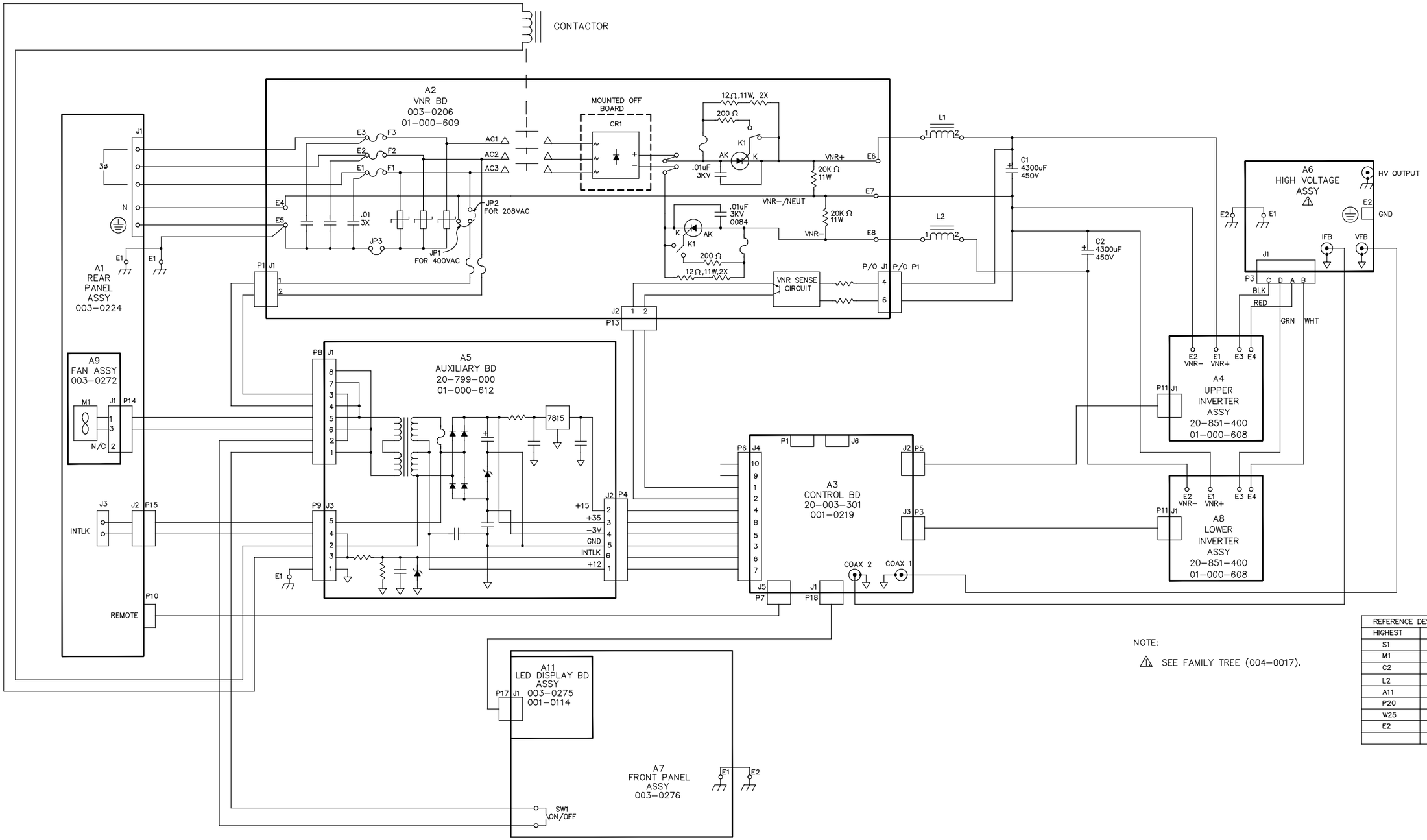

NOTE:

⚠ SEE FAMILY TREE (004–0017).

REFERENCE DESIGNATIONS	
HIGHEST	NOT USED
S1	
M1	
C2	
L2	
A11	
P20	P2
W25	W20,24
E2	

SHEET 1 OF 1

MTL: N/A	TOL: .X = ± .02" .XX = ± .01" .XXX = ± .005" FRAC. = ± 1/64" ANGLES = ± 1/2°	REL. TO MFG. PRJ. ENG. DATE: MFG: DATE: DOC. REL. DATE:	ENG. CTL. DWN: B.WEAVER DATE: 12/90 CHK: DATE: ENG: DATE: APP: DATE:	ELECTRONIC MEASUREMENTS, INC.
FIN: N/A	P/L: 488			TITLE: SCHEMATIC 802S–400VAC SYSTEM
	SCALE: NONE	DO NOT SCALE DWG.		DWG. NO. 001–0253 REV. A

THIS IS A COMPUTER GENERATED DWG.
NO MANUAL REVISIONS ARE PERMITTED.

APPLICATION			LTR	E.C.O. NO.	BY	APP.
USED ON	NEXT ASSY.	QTY.	00	REL. ECO #320 4/91	JT	
802-OEM			A	TG 3 REL. 11/1/95	CJS	

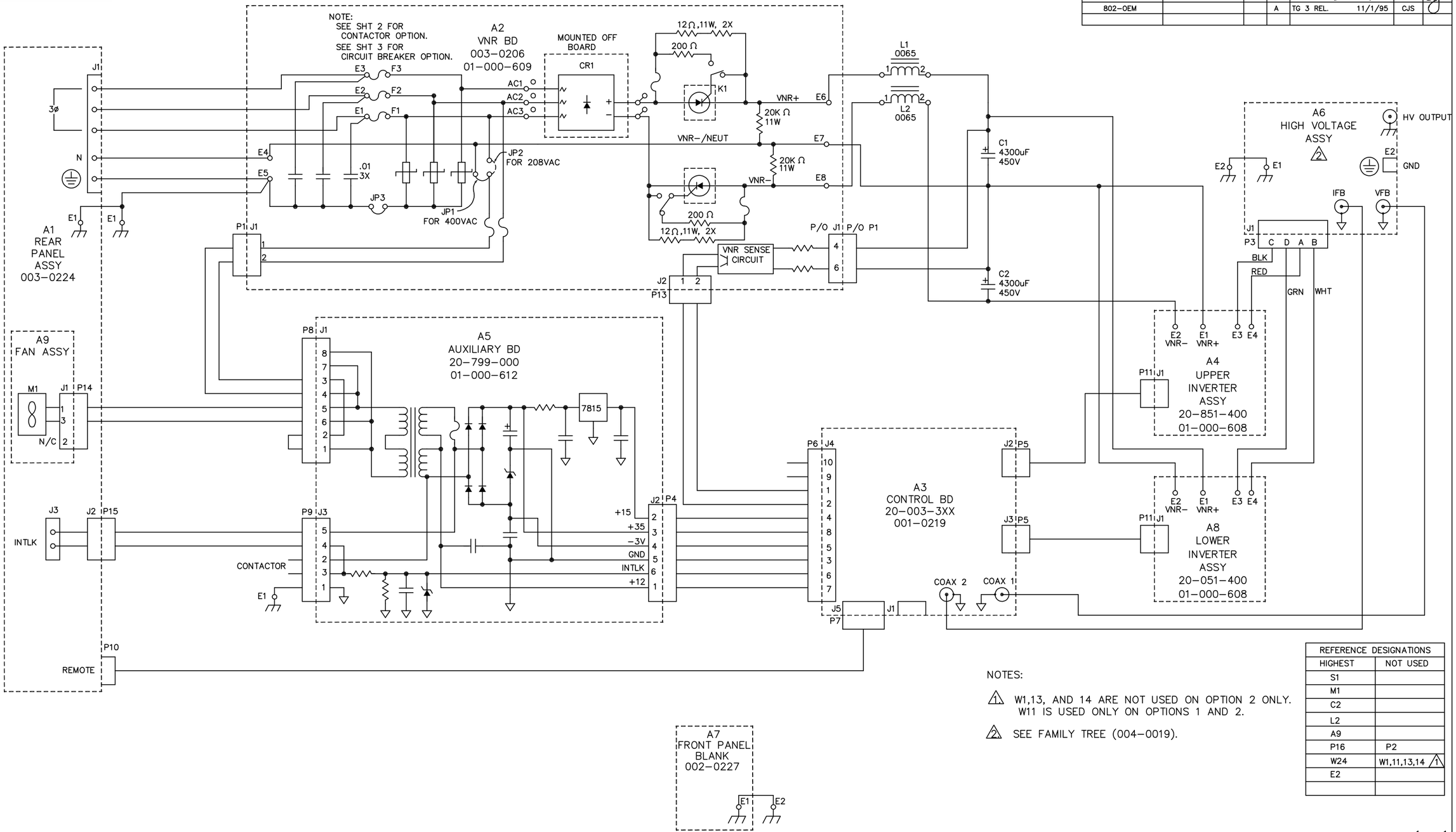

NOTES:

1. W1,13, AND 14 ARE NOT USED ON OPTION 2 ONLY. W11 IS USED ONLY ON OPTIONS 1 AND 2.
2. SEE FAMILY TREE (004-0019).

REFERENCE DESIGNATIONS	
HIGHEST	NOT USED
S1	
M1	
C2	
L2	
A9	
P16	P2
W24	W1,11,13,14 (1)
E2	

SHEET 1 OF 1

MTL:	TOL: .X = ± .02" .XX = ± .01" .XXX = ± .005" FRAC. = ± 1/64" ANGLES = ± 1/2°	REL. TO MFG. PRJ. ENG. DATE:	ENG. CTL. DWN: B.WEAVER DATE: 12/90	ELECTRONIC MEASUREMENTS, INC.
		MFG: DATE:	CHK: DATE: 6/17/95	TITLE: SCHEMATIC 802-OEM 400VAC SYSTEM
FIN:	P/L: 488	DOC. REL. DATE:	DATE: 6/17/95	
	SCALE: N/A	DO NOT SCALE DWG.	APP: DATE: 6/17/95	DWG. NO. 001-0257 REV. A

THIS IS A COMPUTER GENERATED DWG.
NO MANUAL REVISIONS ARE PERMITTED.

APPLICATION			LTR	E.C.O. NO.	BY	APP.
USED ON	NEXT ASSY.	QTY.		SEE SHEET ONE		

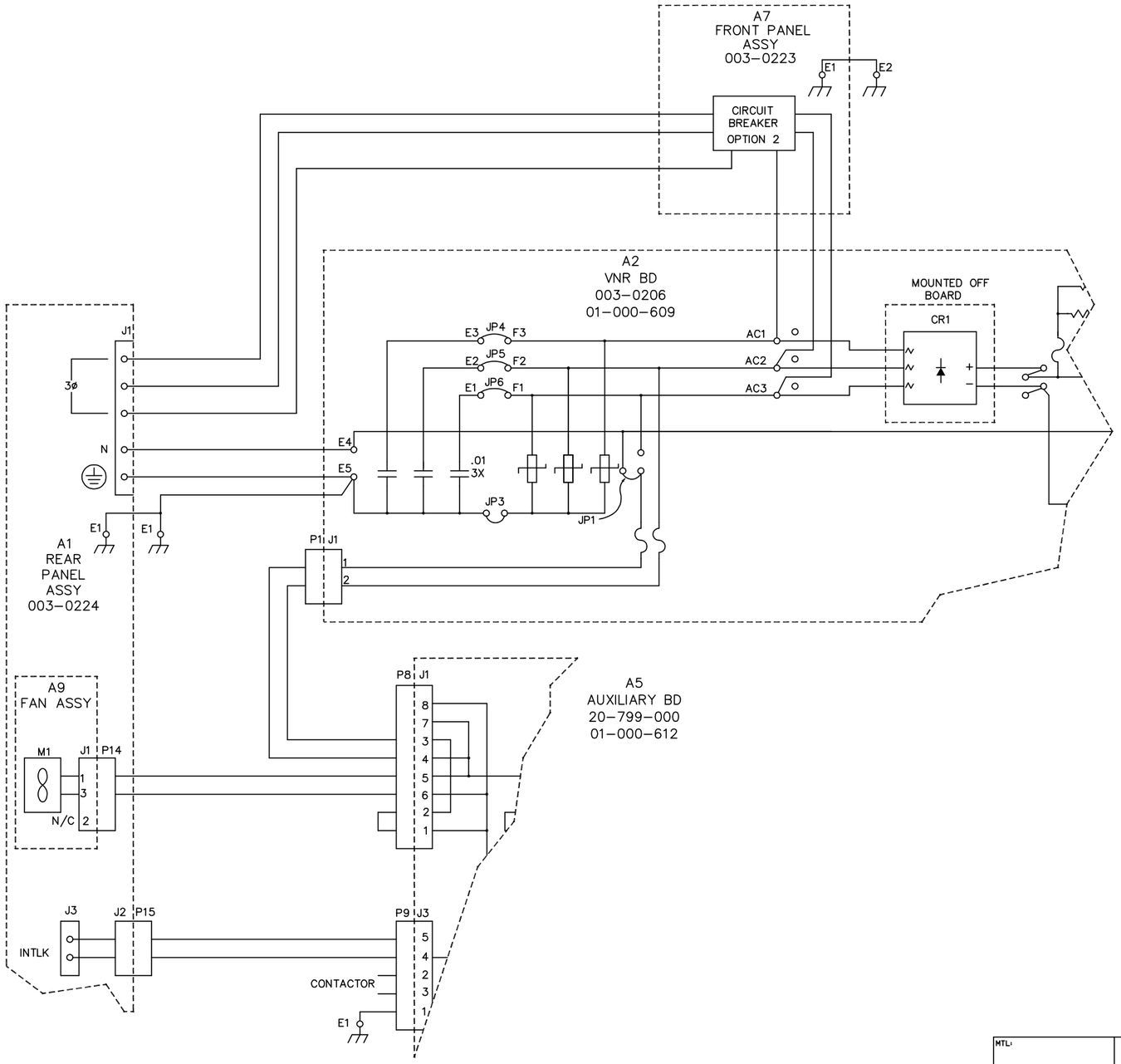

OPTION 2

802 OEM VERSION WITH CIRCUIT BREAKER
AND WITHOUT FUSES.

SHEET 3 OF 3

MTL:	TOL: .X = ± .02" .XX = ± .01" .XXX = ± .005" FRAC. = ± 1/64" ANGLES = ± 1/2°	REL. TO MFG. PRJ. ENG. DATE: MFG: DATE:	ENG. CTL. DWN: B.WEAVER DATE: 12/90 CHK: DATE: 6/17/95 ENG: DATE: 6/17/95	ELECTRONIC MEASUREMENTS, INC.
FIN:	P/L: 488	DOC. REL. DATE:		TITLE: SCHEMATIC 802-OEM 400VAC SYSTEM
	SCALE: N/A	DO NOT SCALE DWG.	APP: DATE: 6/17/95	DWG. NO. 001-0257 REV. A

THIS IS A COMPUTER GENERATED DWG.
NO MANUAL REVISIONS ARE PERMITTED.

APPLICATION			LTR	E.C.O. NO.	BY	APP.
USED ON	NEXT ASSY.	QTY.		SEE SHEET ONE		

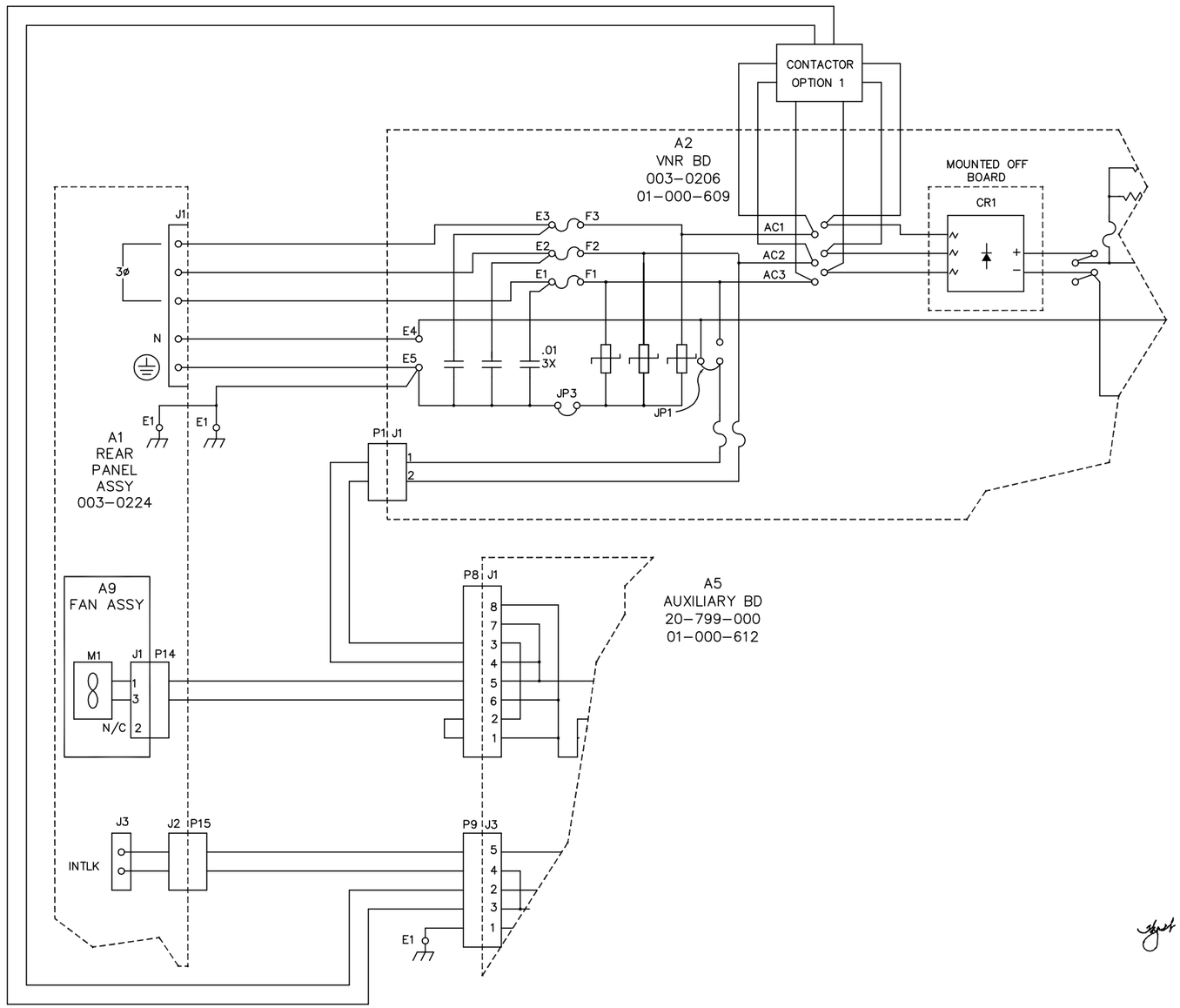

OPTION 1

802 OEM VERSION WITH CONTACTOR

SHEET 2 OF 3

MTL:	TOL: .X = ± .02" .XX = ± .01" .XXX = ± .005" FRAC. = ± 1/64" ANGLES = ± 1/2°	REL. TO MFG. PRJ. ENG. DATE: MFG: DATE:	ENG. CTL. DWN: B.WEAVER DATE: 12/90 CHK: DATE: 6/17/95	ELECTRONIC MEASUREMENTS, INC.	
FIN:	P/L: 488	DOC. REL. DATE:	ENG: DATE: 6/17/95	TITLE: SCHEMATIC 802-OEM 400VAC SYSTEM	
	SCALE: N/A	DO NOT SCALE DWG.	APP: DATE: 6/17/95	DWG. NO. 001-0257	REV. A

APPLICATION			REVISION RECORD			
USED ON	NEXT ASSY	QTY	LTR	DESCRIPTION	APPROVED	DATE
402, 802, 1202			1	PROTO RELEASE	GB 8/29/96	GFS
			2	INITIAL RELEASE	GB 3/11/97	GFS
			3	GENERAL CLEANUP	JB 6/13/97	GFS
			A	TC RELEASE	LPN 7/31/97	GFS
			B	ECO # 16636	LPN 9/4/97	GFS
			C	ECO # 17449	LPN 11/16/98	GFS
			D	ECO # 18660	LPN 9/10/99	

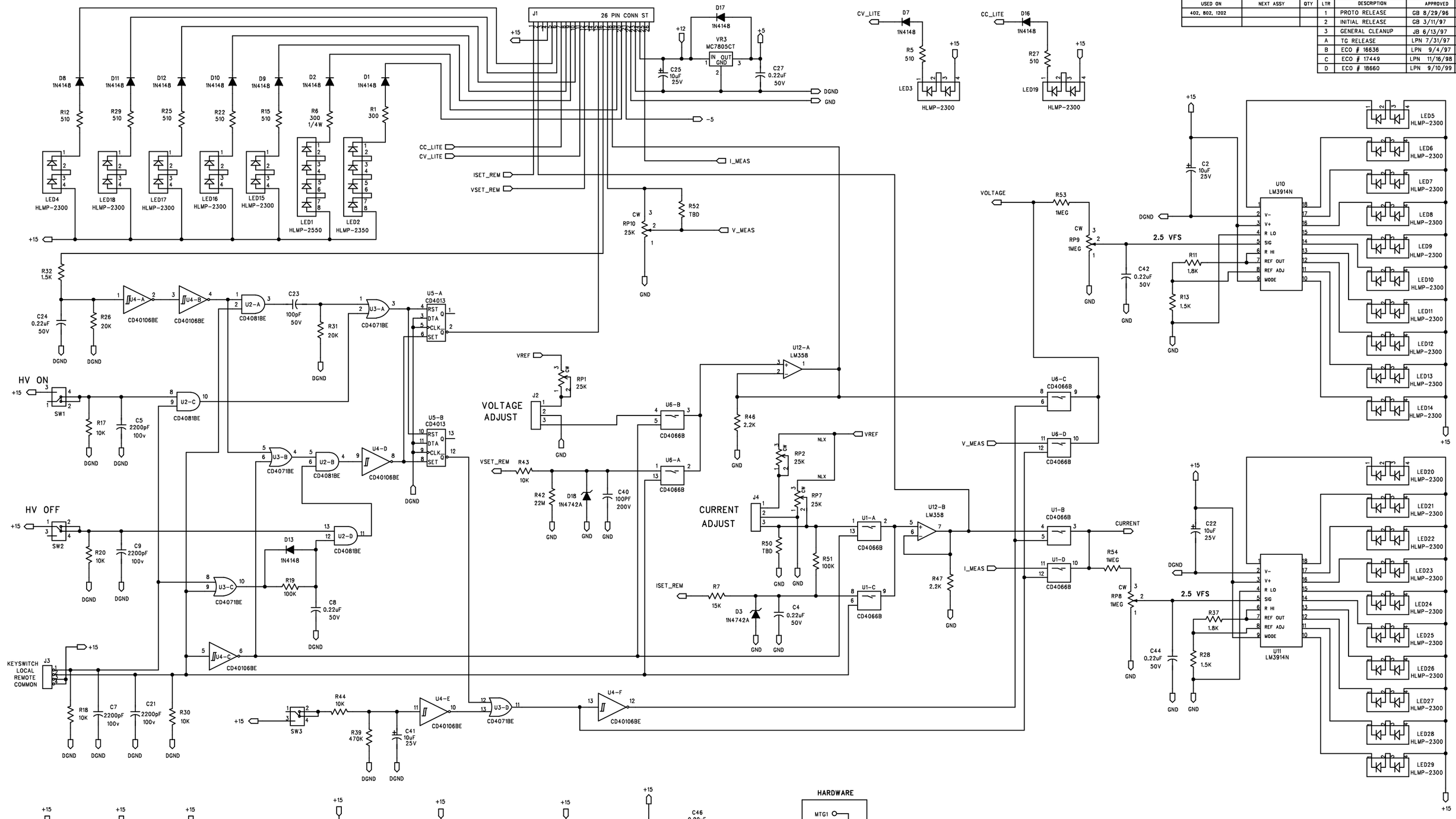

NOTES:

1. UNLESS SPECIFIED, ALL RESISTORS ARE IN OHMS, CARBON COMP, 1/4W, 5%. ALL CAPACITORS ARE IN MICROFARADS. K = 1,000 AND M = 1,000,000.
2. REF. ASSEMBLY 20-008-400.

RELEASE TO MFG		ENG CONTROL		ELECTRONIC MEASUREMENTS INC.	
PROJ ENG: JAB	DATE: 9/5/97	DRAWN: DSF	DATE: 8/29/96	TITLE: SCHEMATIC 1202 DISPLAY PCB	
MFG: R.S.	DATE: 9/5/97	CHK: DRB	DATE: 8/29/96		
DOC REL: GFS	DATE: 9/5/97	ENG: GB	DATE: 8/29/96	P/L: 493	PCB NO: PCB # 21-003-900 / SHEET 1 OF 2
		APPVD: GFS	DATE: 9/5/97	DRAWING NO: 01-000-728	REV: D

APPLICATION			REVISION RECORD			
USED ON	NEXT ASSY	QTY	LTR	DESCRIPTION	APPROVED	DATE
				SEE SHEET 1 FOR CHANGES		

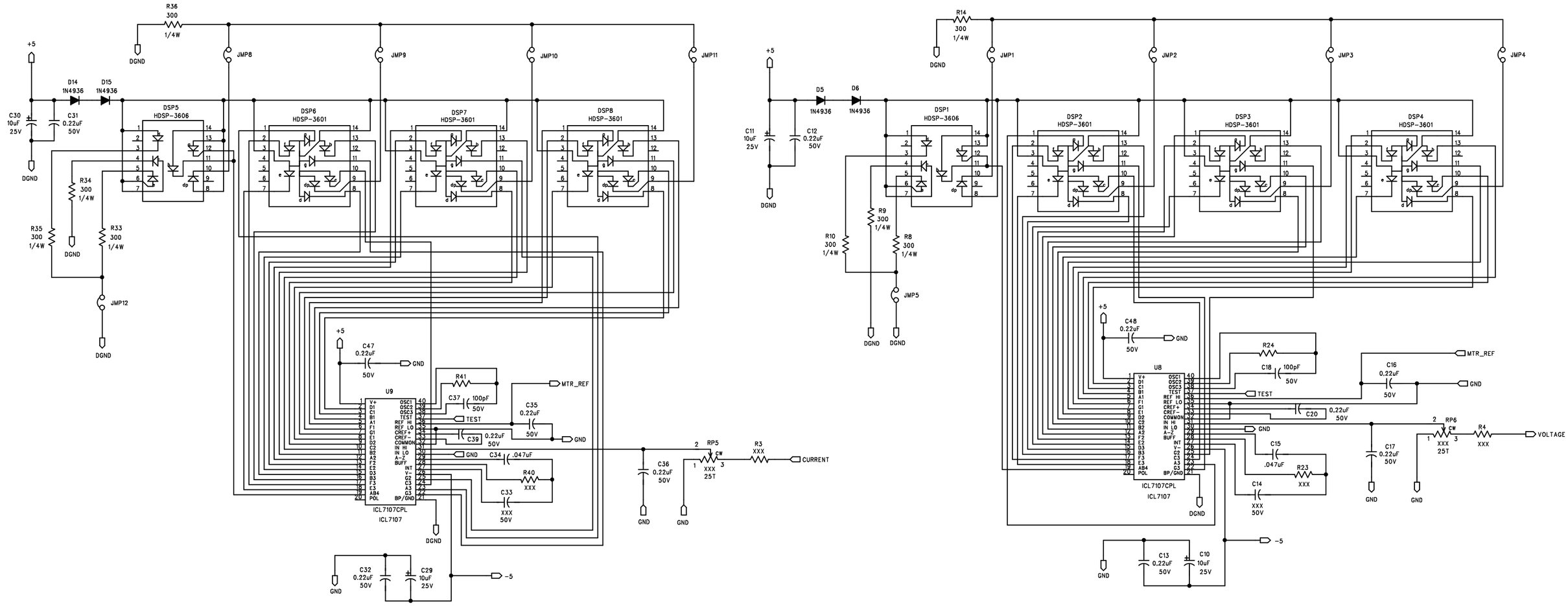

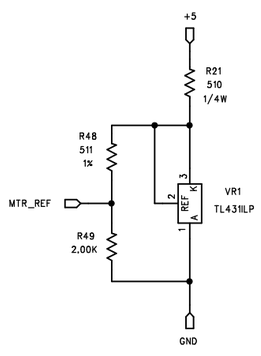

METER TEST

J5-1 — TEST

J5-2 — +5

ELECTRONIC MEASUREMENTS INC.	
TITLE: SCHEMATIC 1202 DISPLAY PCB	
	SHEET 2 OF 2
DRAWING NO: 01-000-728	REV: D

THIS IS A COMPUTER GENERATED DWG.
NO MANUAL REVISIONS ARE PERMITTED.

APPLICATION			LTR	E.C.O. NO.	BY	APP.
USED ON	NEXT ASSY.	QTY.	06	REVISED PER ECO# 424 8/91	JT	
CONTROL BD.	102, 152, 402, 802		07	ENGINEERING CHANGE 7/95	AK	
			A	ECO 16090 04/30/02	RFC	
			B	ECO 22352 09-27-06	KHL	

NC→J1-1 NC→J1-2 NC→J1-7 NC→J1-11 NC→J1-13 NC→J1-14 NC→J1-26
NC→J2-3 NC→J3-6 NC→J2-9
NC→J3-3 NC→J3-6 NC→J9-9
NC→J5-3 NC→J5-4 NC→J5-7 NC→J5-16 NC→J5-21 NC→J5-26
NC→J6-1 NC→J6-2 NC→J6-3 NC→J6-4 NC→J6-7 NC→J6-16
NC→J6-17 NC→J6-21 NC→J6-24 NC→J6-25 NC→J6-26

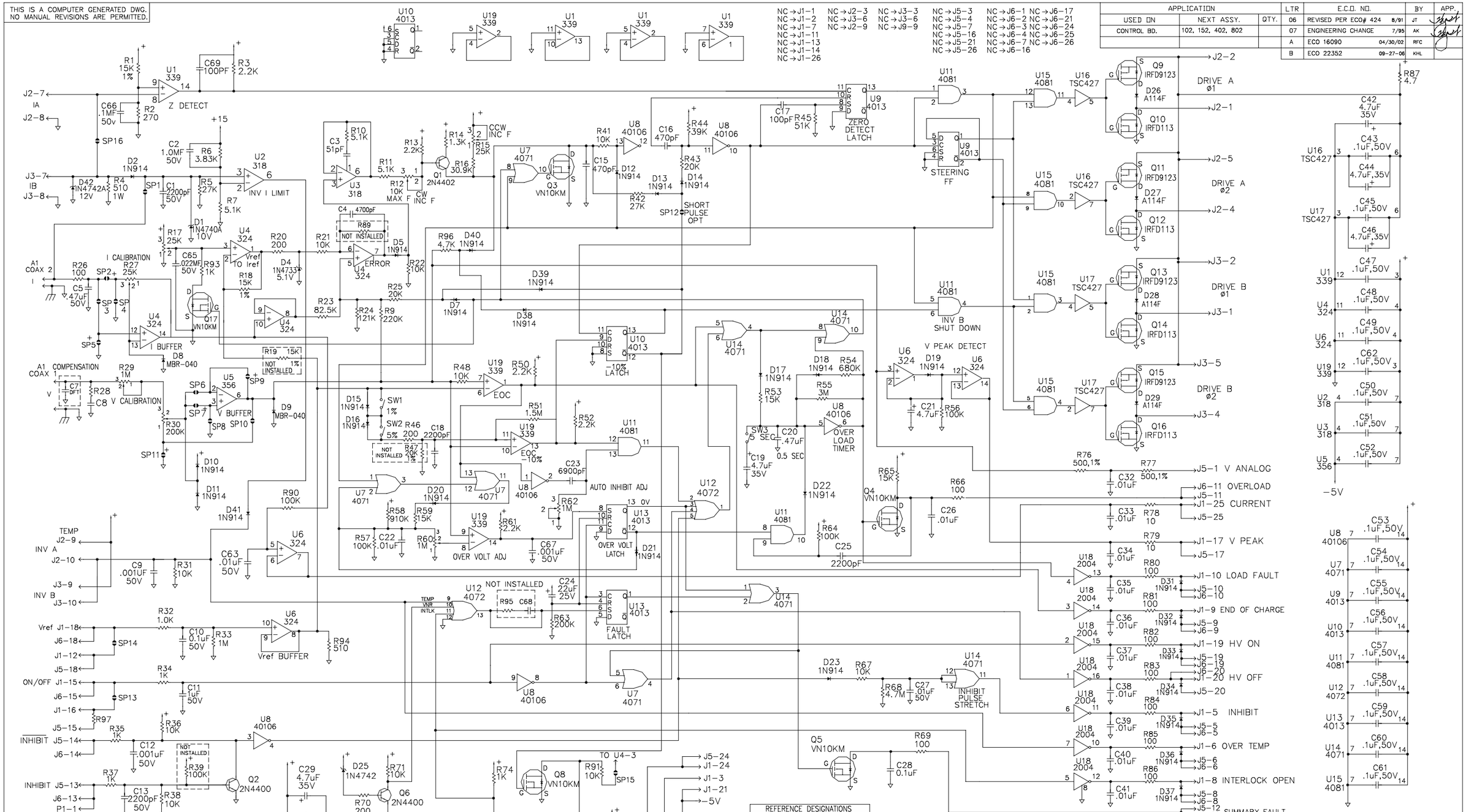

REFERENCE DESIGNATIONS	
HIGHEST	NOT USED
C69	
COAX2	
D42	
J6	
P1	
Q17	
R96	R92,94
SP15	
SW3	
U19	

NOTE: REF. DES. NOT POPULATED ARE C8,64,68;D3,30;R8,9,47,49,88,95.

AUTOCAD DRAWING.
THIS IS A STANDARD FORMAT.
NOT ALL BOXES APPLY TO EVERY
DRAWING AND MAY NOT BE FILLED IN.

SHEET 1 OF 1

MTL: N/A	TOL: .X = ± .02" .XX = ± .01" .XXX = ± .005" FRAC. = ± 1/64" ANGLES = ± 1/2°	REL. TO MFG. PRJ. ENG. DATE: MFG: DATE: DOC. REL. DATE:	ENG. CTL. DWN: AMGAD 7/13/95 CHK: 7/13/95 APP: 7/13/95
FIN:	P/L: SCALE:	DO NOT SCALE DWG.	

LAMBDA EMI

TITLE: SCHEMATIC CONTROL BD

DWG. NO. 001-0219 REV. B

*THIS IS A COMPUTER GENERATED DWG.
NO MANUAL REVISIONS ARE PERMITTED.

APPLICATION			LTR	E.C.O. NO.	BY	APP.
USED ON	NEXT ASSY.	QTY.	00	ECO # 299 8/90	DRP	
YD-4 OEM YD-6 OEM			01	ECO # 340 3/91	JT	
402 802			02	ECO # 387 5/91	JT	
			03	CHANGE TO EMI FORMAT 10/19/94	SAdB	
			A	TG3 RELEASE 11/95	SAdB	
			B	ECO #15212 2/13/96	WJW	GFS
			C	ECO #16806 11/13/97	CJS	GFS
			D	ECO #19281 7/7/00	LPN	

REFERENCE DESIGNATIONS	
HIGHEST	NOT USED
C6	
CR8	
F1	
J3	
R3	
T1	
U1	

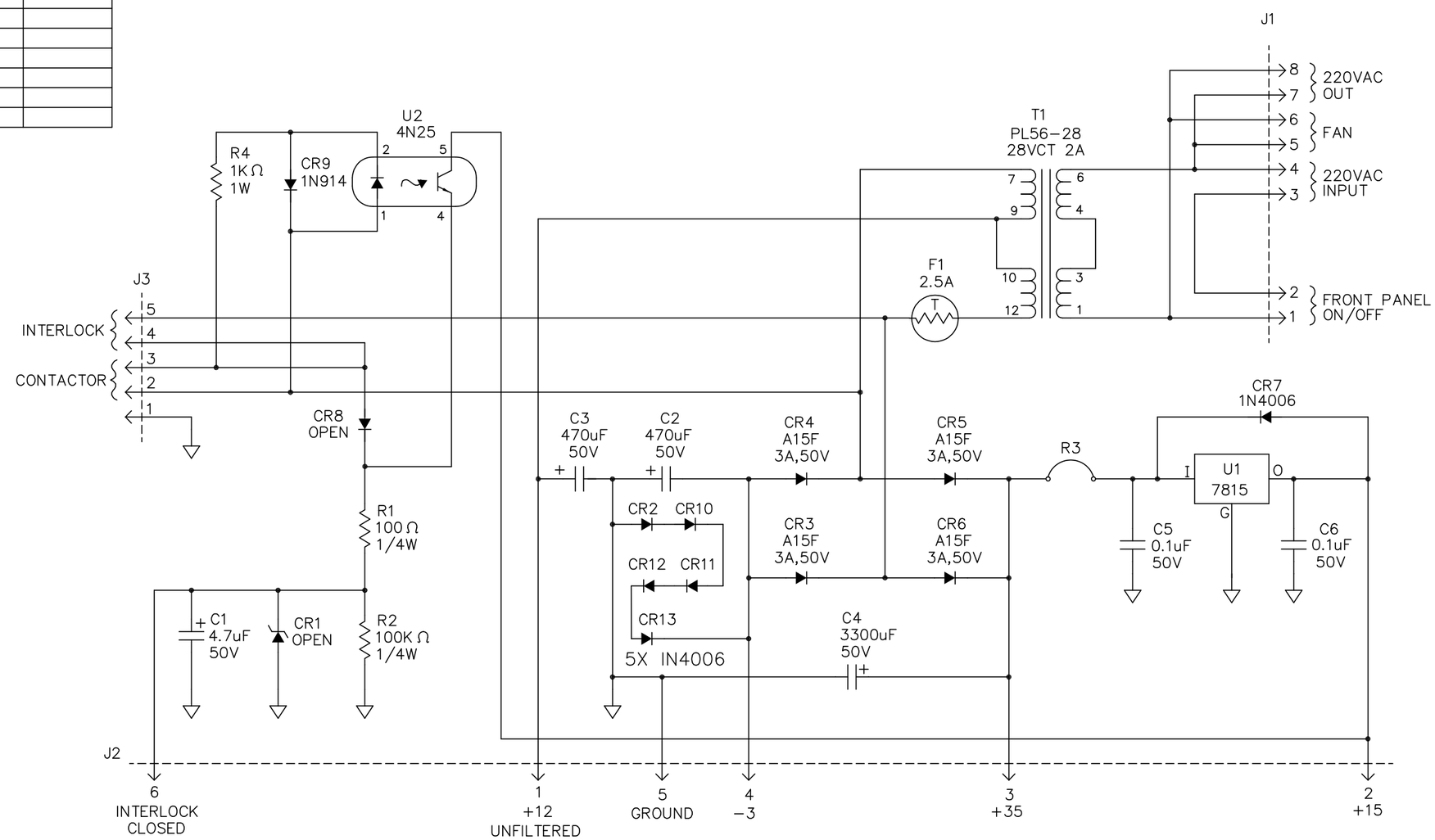

SHEET 1 OF 1

TOL:	REL. TO MFG.	ENG. CTL.	
.X = ± .02"	PRJ. ENG. DATE: 11/16/95	DWN: TURCOTTE DATE: 3/20/90	LAMBEDMAT An Invensys company
.XX = ± .01" .XXX = ± .005" FRAC. = ± 1/64" ANGLES = ± 1/2°	MFG: R.S. DATE: 11/21/95	CHK: DATE: 10/19/94	TITLE: SCHEMATIC PCB A5 AUXILIARY BD 802 STD
P/L: 488	DOC. REL. DATE: 11/16/95	ENG: DATE: 10/19/94	
SCALE: N/A	DO NOT SCALE DWG.	APP: DATE: 10/19/94	DWG. NO. 01-000-612 REV. D

THIS IS A COMPUTER GENERATED DWG.
NO MANUAL CHANGES ARE PERMITTED.

REVISIONS			
LTR	DESCRIPTION	BY/DATE	APP/DATE
1	INITIAL RELEASE	RFC	GFS
2	TG CHANGE	RHS	GFS
A	ECO # 18955 REDRAWN FROM AUTOCAD	LPN 5/4/00	GFS
B	ECO # 19360	LPN 9/15/00	GFS
C	ECO # 19423	LPN 9/27/00	GFS
D	ECO 21939A	KHL 10-19-05	

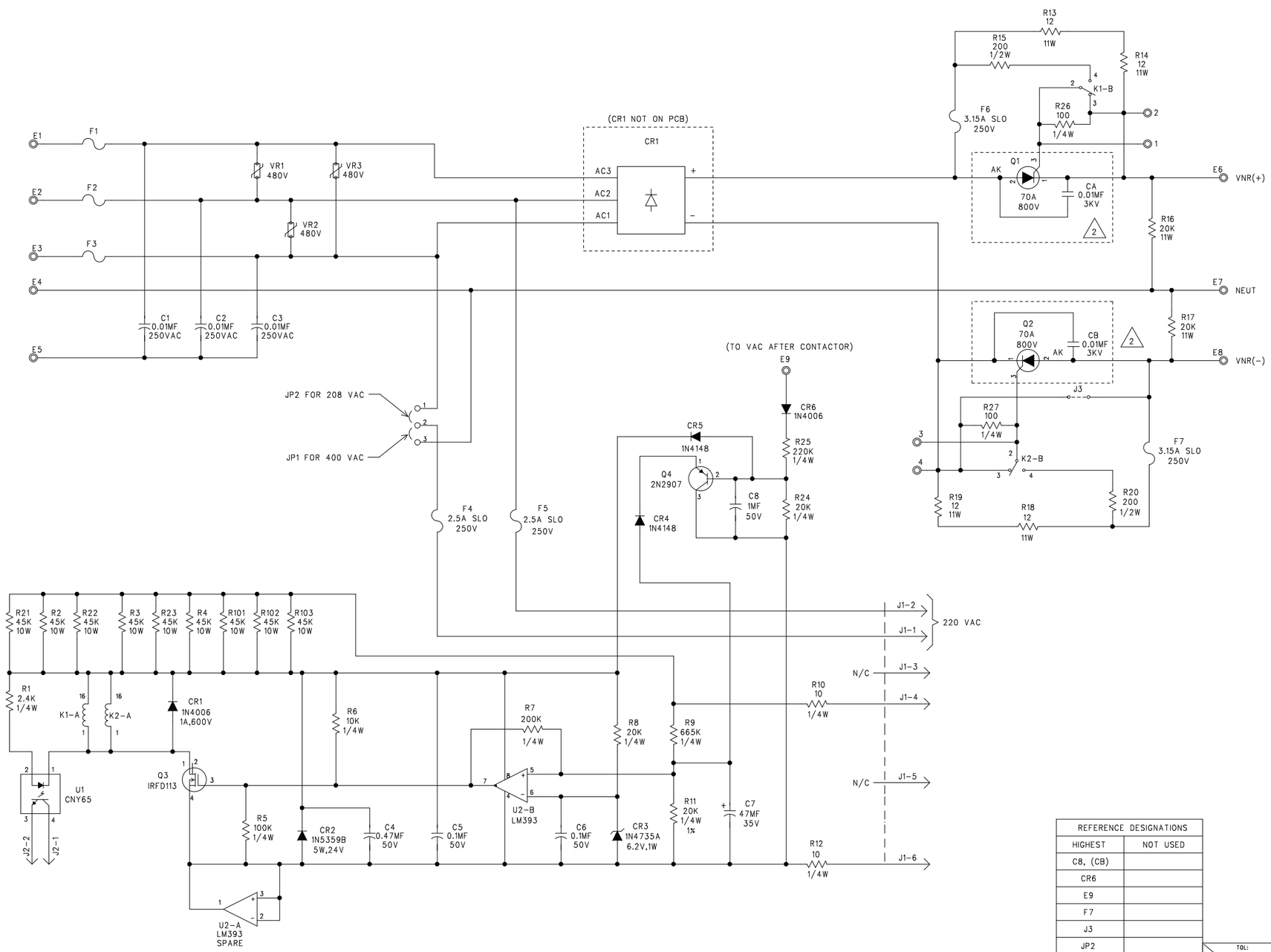

NOTES:

1. VNRUV ↑ = 233V

   VNRLV ↓ = 191V

2. CAPS CA & CB AND RECTIFIERS Q1 & Q2 ARE NOT ON PRINTED CIRCUIT BD.

3. UNLESS SPECIFIED, ALL RESISTORS ARE IN OHMS. ALL CAPACITORS ARE IN MICROFARADS. K = 1,000 AND M = 1,000,000.

4. REF. ASSEMBLY 20-023-900.

REFERENCE DESIGNATIONS	
HIGHEST	NOT USED
C8, (CB)	
CR6	
E9	
F7	
J3	
JP2	
K2	
Q4	
R103	R28 THRU R100
U2	
VR2	

TOL: .X = ±.02 .XX = ± .01 .XXX = ± .005 FRAC = ± 1/64 ANGLES = ± 1/2	RELEASE TO MFG	ENG CONTROL	LAMBDA EMI
	PRJ.MGR: SA DATE: 10/6/00	DWN: LPN DATE: 4/27/00	TITLE: SCHEMATIC PCB A2 VNR BOARD XR802 STD
	MFG: RS DATE: 11/20/00	CHK: GFS DATE: 1/27/00	
P/L: 488	DOC.REL: GFS DATE: 10-4-00	ENG: S.A. DATE: 1/27/00	PCB: 21-023-900 SHEET 1 OF 1
SCALE:		APP: GFS DATE: 1/27/00	DRAWING NO: 01-023-900 REV. D

PADS DRAWING.
THIS IS A STANDARD FORMAT.
NOT ALL BOXES APPLY TO EVERY DRAWING AND MAY NOT BE FILLED IN.

Dimensonal Outline Drawing
Models 802S EM
Dimensions in inches (mm)

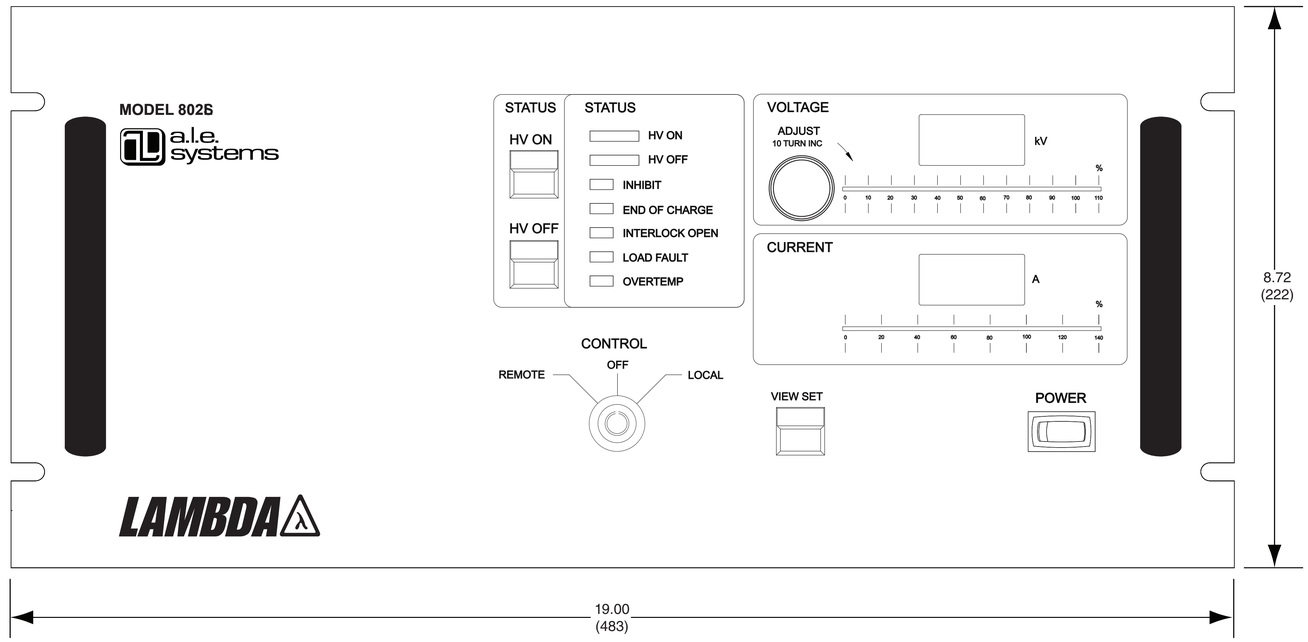

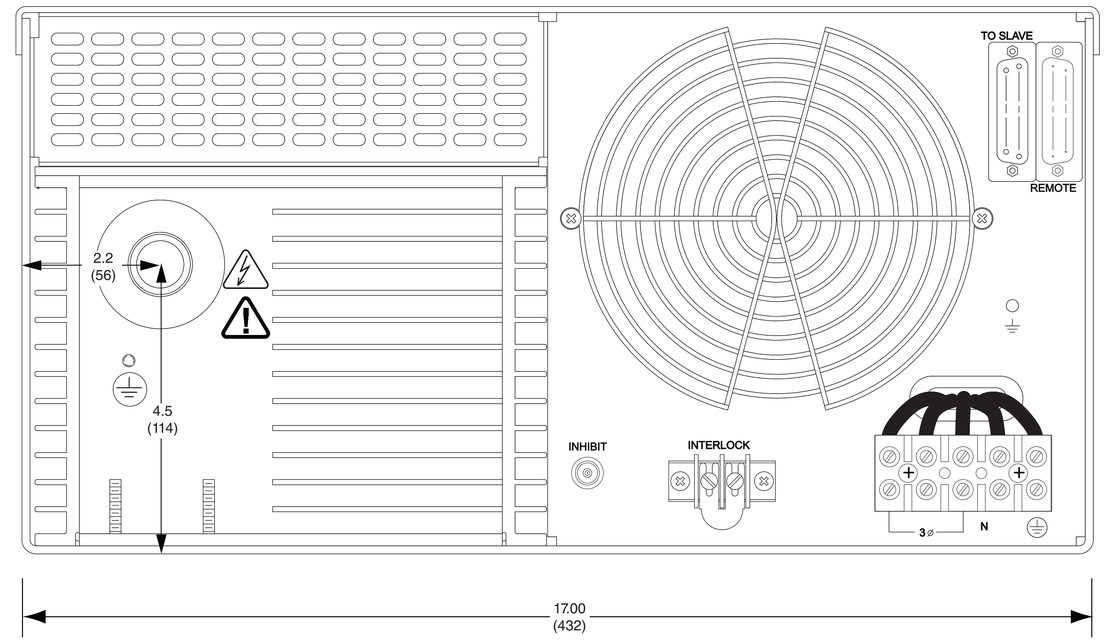

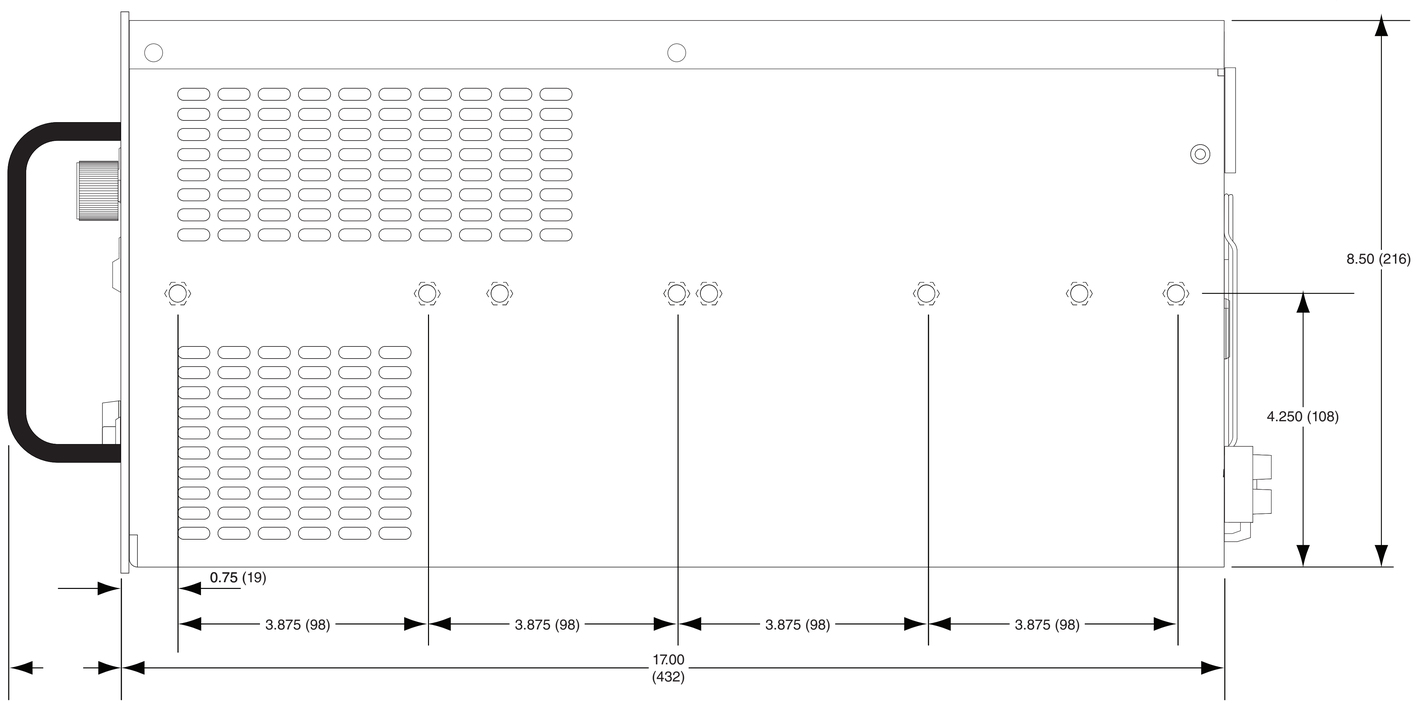

Notes:

1 - Chassis slide mounting pattern matches General Devices CT series or equivalent with 3.875" hole spacing.

2 - Cooling air exits rear of unit and enters at either side. Do not block air vents or cooling fan and allow several inches of clearance at rear of unit.

3 - Allow 6" bend radius at rear of unit for HV cable.

Dimensonal Outline Drawing
Models 802S EM
Dimensions in inches (mm)

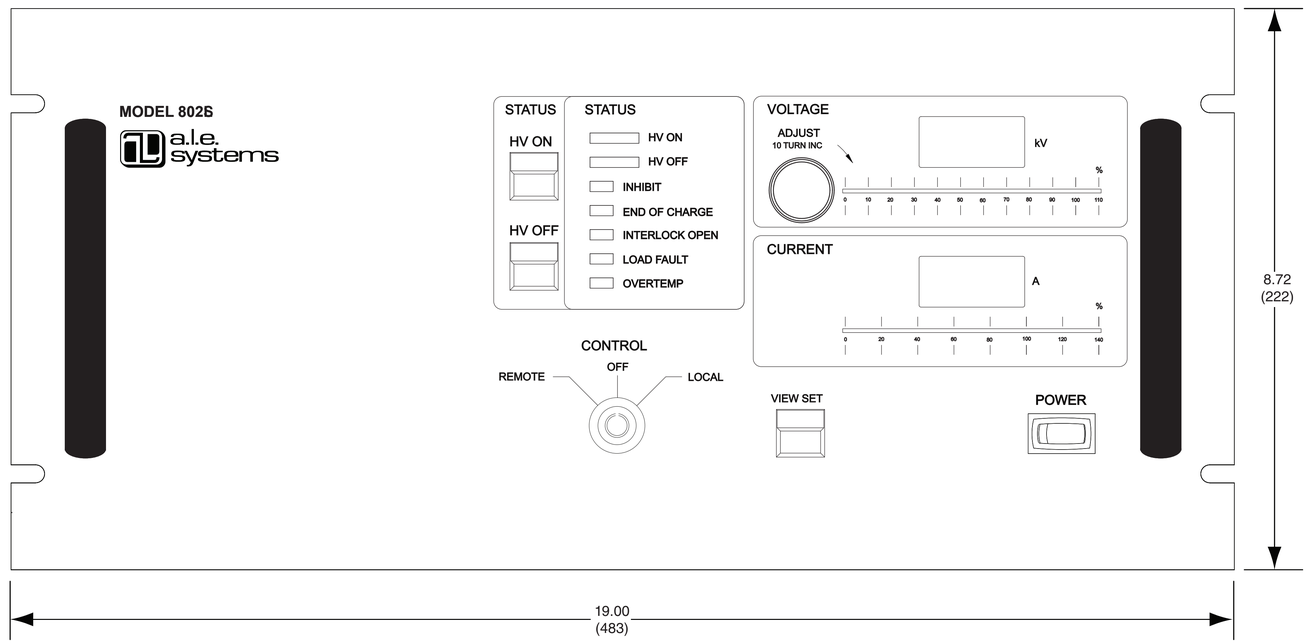

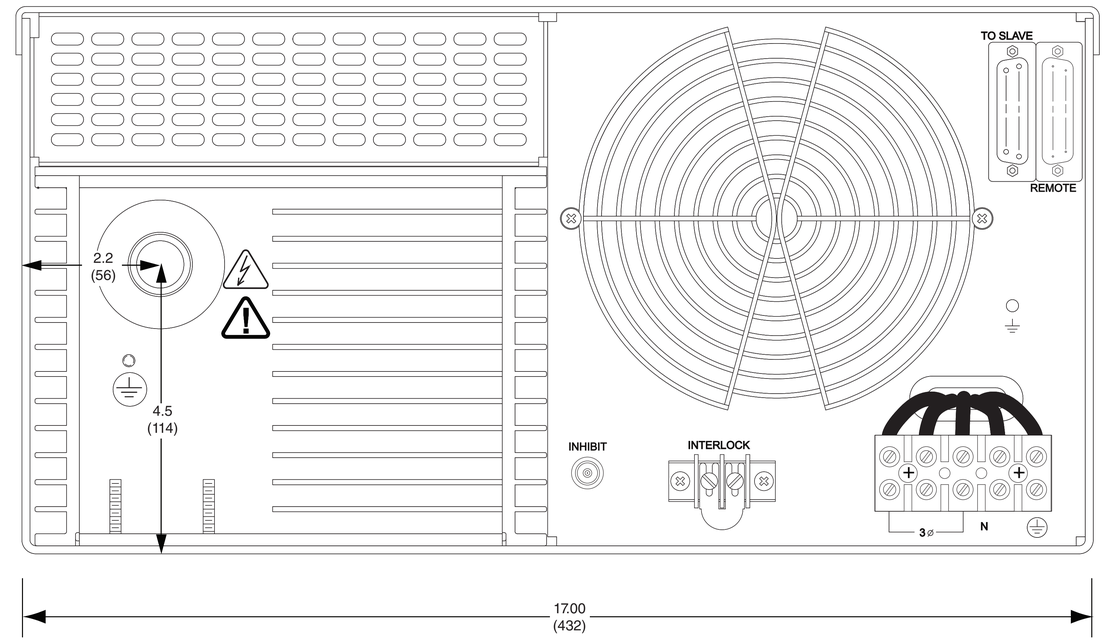

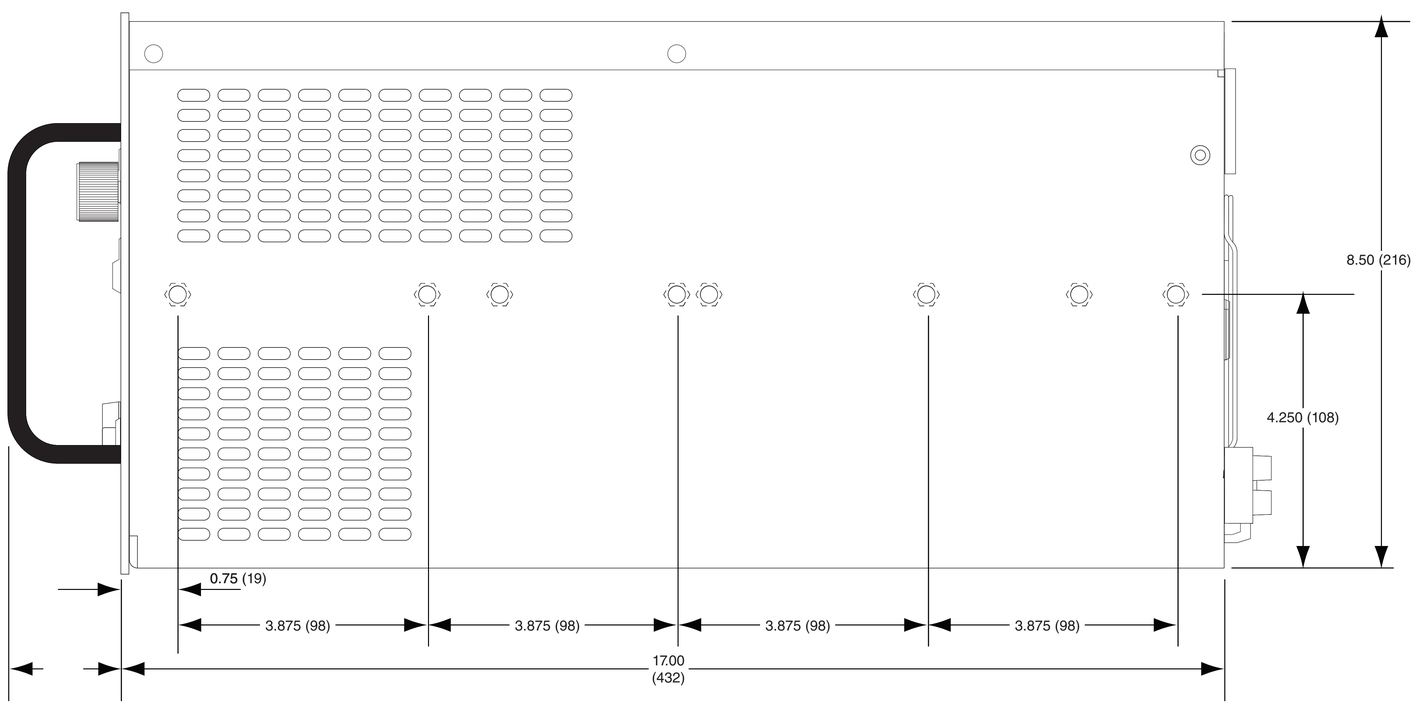

Notes:

1 - Chassis slide mounting pattern matches General Devices CT series or equivalent with 3.875" hole spacing.

2 - Cooling air exits rear of unit and enters at either side. Do not block air vents or cooling fan and allow several inches of clearance at rear of unit.

3 - Allow 6" bend radius at rear of unit for HV cable.

Dimensonal Outline Drawing
Models 802S EM
Dimensions in inches (mm)

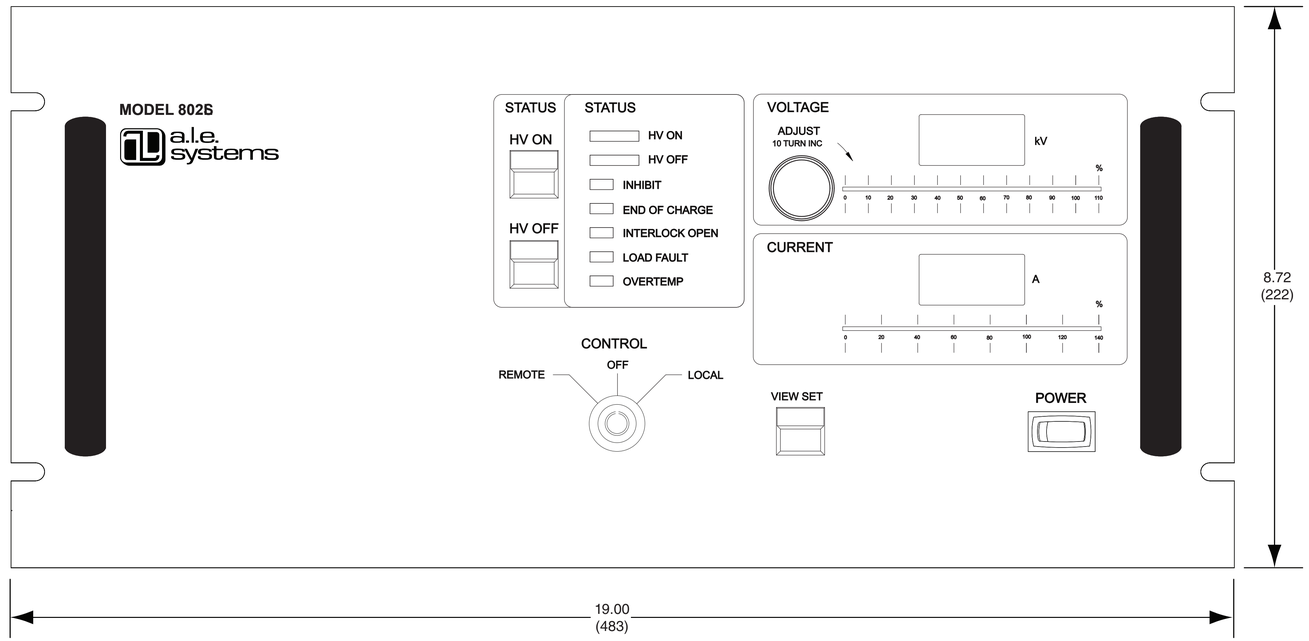

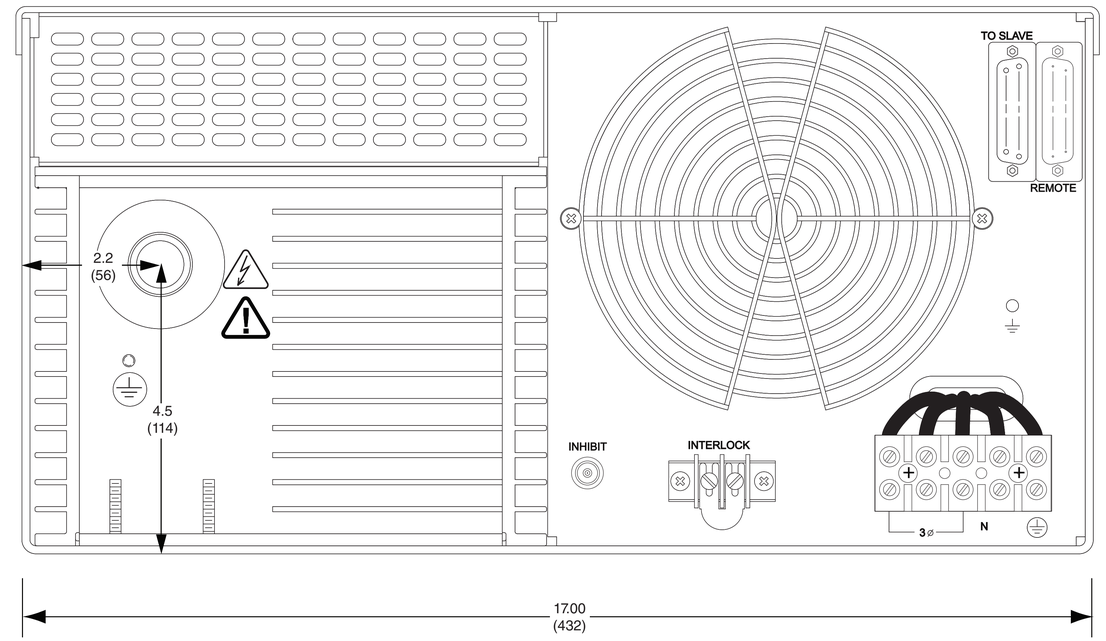

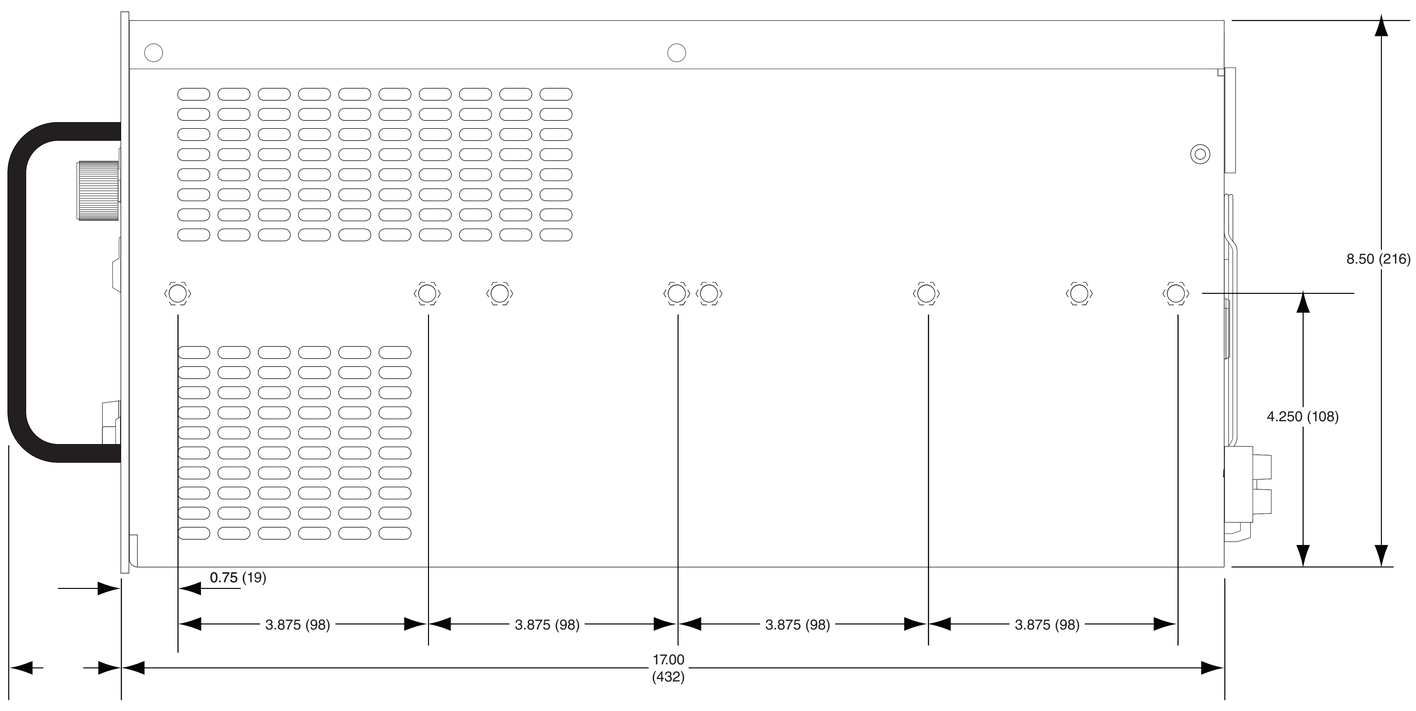

Notes:

1 - Chassis slide mounting pattern matches General Devices CT series or equivalent with 3.875" hole spacing.

2 - Cooling air exits rear of unit and enters at either side. Do not block air vents or cooling fan and allow several inches of clearance at rear of unit.

3 - Allow 6" bend radius at rear of unit for HV cable.

Specification for the Charge Supplies
Capacitor Charge/Discharge Power Supply (CCDPS) for FLARE

February 27, 2016

Contents

List of Tables

List of Figures

1 Overview

A FLARE CCDPS module consists of a number of storage capacitors connected in parallel to a discharge switch. Each module is charged by a matched pair of switching power supplies, connected together to produce a bipolar output. In normal operation, a DPST normally-open relay closes for the charging period and disconnects the charging supplies prior to discharge. A network of resistors and diodes provide protection for the power supply under several failure scenarios discussed in Section 4.

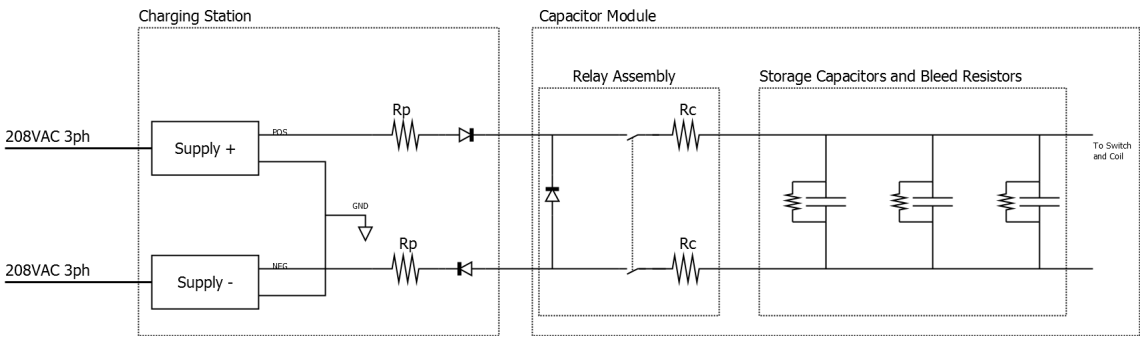

Figure 1: Charging scheme in use for the FLARE CCDPS banks. The resistor values are given in Table 1.

2 Charging Supplies

Each bank for the experiment has at least two supplies - having equal positive output and negative output to produce a bipolar output. TDK-Lambda supplies are used heavily, as their supply curves are closer to constant-power and are therefore more cost-effective in meeting the charge time specification (whereas the Spellman supply is constant-current, resulting in a power output that is quadratic in time). PFA and PFB are charged by the separate bipolar supplies to support charging to different voltages, as are TFA and TFB similarly. Under initial operation the reduced-energy banks will be connected in parallel, trading operational flexibility for reduced expenditures in the early phase. All charging supplies operate on 3-phase 208VAC or 24VDC. For the 24VDC modules a power supply is included so all the power supplies ultimately derive power from 208VAC.

	OH	EF	GF	PFA/B	TFA/B	DCI	DCO
Supply models (see table below)	(b)	(c)	(a)x3	(b)	(d)	(e)	(f)
Protection Resistor value (Rp) [Ω]	180	2.2	54	100	640	180k	70k
Protection Resistor rating [W]	50	20	200	100	20	1	1
Charge Resistor value (Rc) [Ω]	1600	10	720	2000	5600	1.6M	640k
Charge Resistor rating [W]	2000	2000	2000	2000	2000	10	10
Charge module bleed resistor value (Rb) [MΩ]	-	-	-	-	-	2000	800

	Manufacturer	V_{max} [kV]	Qty. Ea. full power	Qty. Ea. initial	Supply (+) model	Supply (-) model
(a)	TDK-Lambda	10	3	1	802L-10kV-POS-208VAC	802L-10kV-NEG-208VAC
(b)	TDK-Lambda	10	3	1	402L-10kV-POS-208VAC	402L-10kV-NEG-208VAC
(c)	TDK-Lambda	1	1	1	402L-1kV-POS-208VAC	402L-1kV-NEG-208VAC
(d)	Spellman	10	2	1	SLM10P1200	SLM10N1200
(e)	UltraVolt	30	1	-	30C24-P60-I10	30C24-N60-I10
(f)	UltraVolt	30	1	-	30C24-P125-I10	30C24-N125-I10

Table 1: Charge supply and resistor specifications.

	Supply Model	Qty. Ea. full power	Current draw (ea) [A]	Subtotal [A]
(a)	TDK-Lambda 802L	6	50	240
(b,c)	TDK-Lambda 402L	8	25	160
(d)	Spellman SLM10	2	7	14
(e,f)	Mean Well LRS-350-24	1	2	2
			Total Amps:	416

Table 2: Facility power requirements for charging supplies. All supplies operate on 208VAC 3-phase.

Manufacturer	HV ON pins	$V_{control}$ range	$V_{control}$ pin	Voltage ref (GND) pin
TDK-Lambda 802L	8,14	0-10V	22	24
TDK-Lambda 402L	8,14	0-10V	22	24
Spellman SLM10	11,12 (J2)	0-10V	3	9
Advanced Energy/UltraVolt	4,7	0-10V	6	5

Table 3: Supply control interface.

Facility power requirements for the charging supplies are listed in Table 3. All charge supplies shall have their power interrupted by normally-open relay upon receipt of the Emergency Stop signal.

The high voltage output stage of each supply shall be enabled by external relay-closure at the CCDPS control computer. All charging supplies are controlled by 0-10VDC analog signal representing a charge voltage from 0 to the maximum supply output voltage listed in Table 1. This control signal shall be produced by analog output at the CCDPS control computer.

3 Charge Connect Modules

One charge connect module is installed at each capacitor bank module. The charge connect module consists of two charge resistors, one DPST relay for connecting the charge supply to the bank, and one protection diode, as seen in Figure 2. The charge resistors reduce the risk of charging supply damage in the case of a busswork arc, ground fault, or capacitor failure; they are rated to 2kW and are of wire-wound type (as the added inductance improves fault isolation) except for DCI and DCO which only require 10W power rating. The role of the protection diode is described in Section 4.

The DCI and DCO modules utilize the 60kV variant of the charge connect module, which is designed for immersion of the components in insulating oil. The 60kV variant may be operated below 30kV without oil. Included in this variant is a bleed resistor that slowly discharges the capacitor as a final redundant energy dump. The bleed resistor is included with the charge connect module in this case in order to reduce the component count near the discharge and crowbar switches, enabling the lowest inductance design. The larger, lower-voltage banks utilize a bleed resistor installed on each individual capacitor; those are discussed in the Dump section of the specification of each of those banks. The 60kV charge connect module also includes the supply protection resistors so that they are immersed in oil without requiring another oil reservoir.

4 Charge supply protection

If a bank pre-fires, the charge relays will still connect the charging supplies to the bank and any programmed crowbar will not operate. This potentially presents a large reversed voltage to the charging supply. The charging supply might also be exposed to reversed voltages if the charge disconnect relay fails in the closed state. A protection diode is installed across the charging supply connection to mitigate these risks. Under normal charging the diode is reverse-biased and does not conduct appreciable current. In the event of a pre-fire and bank reversal the diode becomes forward-biased. The current in the diode is then limited by the

charge resistor, and the voltage reversal presented to the charging supply is limited to the forward voltage drop of the diode.

Protection resistors are installed on the output of each power supply that operate in complement to the protection diodes described above. If a connected capacitor bank pre-fires, reversed voltages on the charging supply cable are limited to the protection diode's forward voltage drop; the additional protection resistor limits the current that arises in the supplies' internal protection diodes due to the resulting forward bias. Additionally if a short-circuit failure occurs along the charge line the protection resistors will limit the prompt current until the supplies can register the overload condition. These resistors are designed not to limit the supply current under normal operation. The combination of charge resistor, protection diode, and protection resistor follows the recommendations of Ref. [2], adapted to a bipolar supply.

In the event of a ground fault the bipolar capacitor bank will shift far away from balanced voltages – potentially doubling the voltage with respect to ground. If such a fault occurs while the charge disconnect relay is still connected to the charge supply then the lifted voltage might destroy the supply. Output diodes are installed that would become reverse-biased in this case, providing a voltage drop to match the supply output and preventing damage.

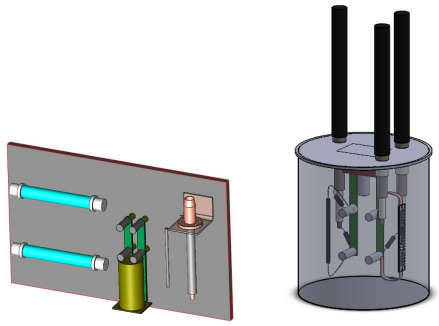

(a) (b)

Figure 2: Charge connect module CAD models: (a) 20kV variant, (b) 60kV variant. The resistor values are given in Table 1.

5 References

References

[1] Statement of Work for Design of Capacitor Charge/Discharge Power Supply (CCDPS) for FLARE FLARE-CCDPS-150828, Revision 0, Sept. 9th 2015

[2] Interfacing Pulsed Power Systems to Switching Power Supplies, Presented at International Power Modulator Conference, Hollywood, California, July 1-3, 2002

6 Appendices

6.1 Vendor specifications

a.l.e. systems

402 Series Data Sheet

High Voltage Power Supply
Capacitor Charging and DC
Output Voltage from 1kV - 50kV
Output Power 4kJ/sec or 4kW
Full local and remote control

TDK·Lambda

www.us.tdk-lambda.com/hp

402 Series Specification

Industry standard rack mount capacitor charging and DC power supplies with 4kJ/sec rating for capacitor charging, or 4kW rating in continuous DC applications.

- **Power rating of 4kJ/sec, 5kJ/sec peak**
- **Output Voltages from 0-1kV to 0-50kV**
- **Compact air cooled rack mount package**
- **Efficient IGBT based resonant inverter**
- **Excellent pulse to pulse repeatability**
- **208 or 400VAC 3Ø input voltage**
- **Comprehensive remote control interface**
- **UL Approved AC line contactor (optional for OEM models)**
- **Ultra reliable and rugged industry standard design**
- **Passive PFC (pf = 0.85)**
- **Full local output voltage and HV On/Off controls (L version)**
- **Simple parallel operation for higher power**
- **Lab, Slave, or OEM front panel options**

Average Capacitor Charging Power	4,000 Joules/sec ($\frac{1}{2}CV^2$ x Rep Rate)
Peak Capacitor Charging Power	5,000 Joules/sec ($\frac{1}{2}CV^2/t_{charge}$)
Average Continuous DC Power	4,000 Watts
Output Voltage Range	1, 2, 4, 5, 10, 15, 20, 30, 40, 50kV, variable from 10-100% of rated
Polarity	Available as fixed Positive or Negative. Please specify at time of ordering
HV Output Cable	1-39kV Models - DS2124 Coaxial cable with proprietary HV connector
	40-50kV Models - DS2214 Coaxial cable with proprietary HV connector
HV Insulating Medium	Exxon Mobil Univolt N61B or equivalent insulating oil
AC Input Voltage	208VAC (180-264), 3Ø or 400VAC (340-460), 3Ø + N, specify at time of ordering
AC Input Current	20A/15A
AC Connector	UL/CSA approved terminal block. 3Ø + ⏚ for 208VAC, 3Ø + N + ⏚ for 400VAC
AC Line Contactor	UL/CSA approved AC line contactor (standard on 402L and 402S, option for 402OEM)
Power Factor	Passive PFC pf = 0.85 at full load and nominal AC line
Efficiency	Better than 85% at full load
Front Panel	402L - Voltage Control, Voltage & Current Meters, Status Indicators
	402S - On/Off Switch, Status Indicators
	402-OEM - Blank front panel
Stability	0.2% per hour after 1 hour warmup
Temperature Coefficient	100ppm per °C typical
Stored Energy	Less than 0.3J all models
Pulse to Pulse Repeatability	±2% to 1000Hz, consult factory for higher rep rates
Dimensions - inches (mm)	19 (483) W x 7 (178) H x 17 (432) D
Weight - lbs (kg)	65 (30)
Ambient Temperature	Storage: -40 to +85°C. Operating: -20 to +45°C
Altitude	Storage: 40,000ft (12,000m), Operating: 9,900ft (3,000m)
Humidity	10-90%, non-condensing
Protection	Open/short circuits, Overloads, Arcs, Overtemp, Overvoltage, Safety Interlock
Remote Control (all models)	Via 25-pin D-sub connector on rear of unit, Signals include, Vprogram (0-10V), HV Enable/Reset, Inhibit, Summary Fault, Load Fault, Vanalog, Vpeak
Accessories	10ft HV cable, operating manual
Options	EN - Low Enable. Replaces standard high enable
	5V - 0-5V Analog programming. Replaces standard 0-10V programming.
	LP - Latching Overload Protection, requires HV reset after overload fault
	DC - Continuous DC operation
	CT - AC line contactor (option for 402OEM models only, standard on 402L and 402S)
	Double terminated HV cable, and mating bulkhead connector
Ordering Info	Model - XXkV - POS (or NEG) - YYYVAC - ZZ (options)
Ordering Examples	402L-10kV-POS, 402S-1kV-NEG-DC, 402-OEM-50kV-POS-400VAC
All specifications subject to change without notice	

402 Series Mechanical Details

402L Front View

402L Rear View

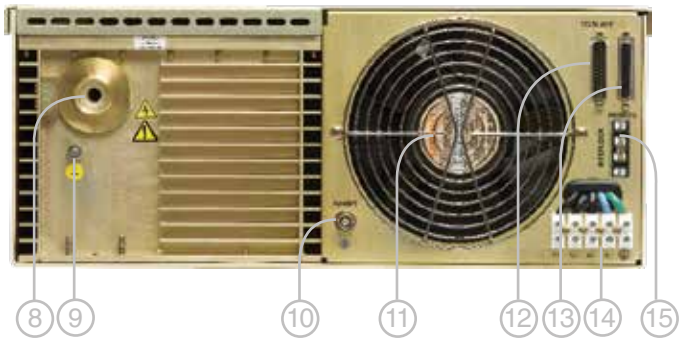

1 - HV On/Off Push Buttons (L model only)
2 - Status Indicator LEDs (L and S models only)
3 - Local/Remote Keyswitch (L model only)
4 - 10-Turn HV Output Control (L models only)
5 - View Set Push Button (L models only)
6 - Output Voltage and Current Displays (L models only)
7 - Power Switch (L and S models only)

8 - HV Output Connector
9 - Ground Stud
10 - Inhibit BNC (L models only)
11 - Cooling Fan
12 - Slave Supply Programming Connector (L models only)
13 - Remote Programming Connector
14 - AC Input Terminal Block
15 - Interlock Terminals (L and S models only)

Outline Drawings

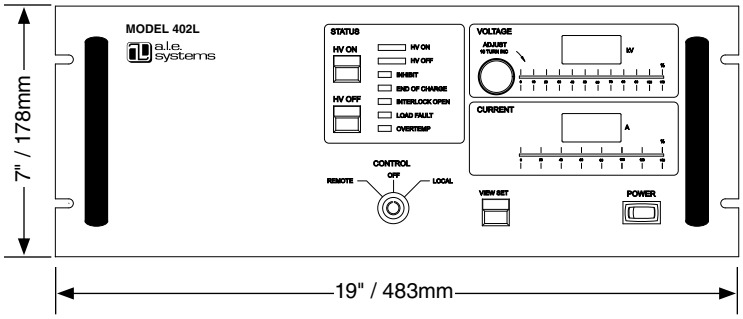

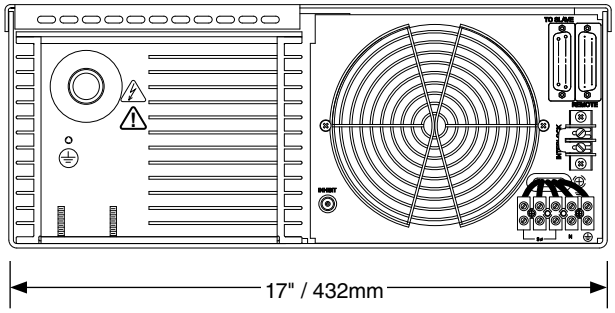

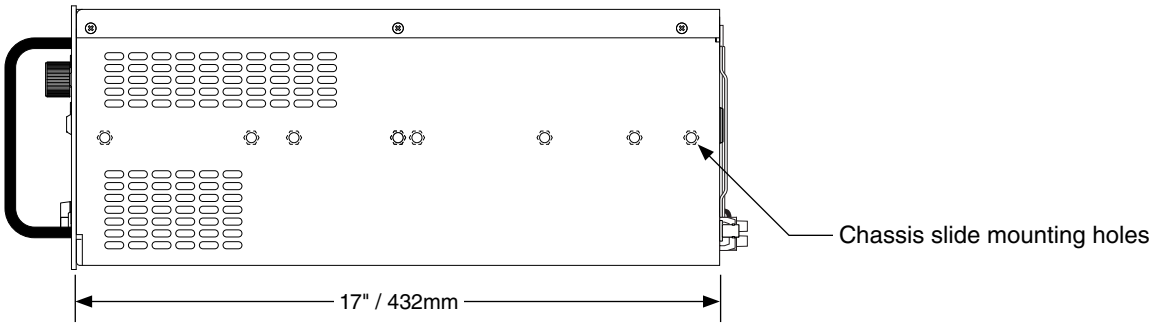

Notes:
1 - Chassis slide mounting pattern matches General Devices CT series or equivalent with 3.875" hole spacing.
2 - Cooling air enters rear of unit and exits at either side. Do not block air vents or cooling fan and allow several inches of clearance at rear of unit.
3 - Allow 6" bend radius at rear of unit for HV cable.

GLOBAL HIGH VOLTAGE NETWORK

NORTH AMERICA

TDK-Lambda Americas Inc., High Power Division
405 Essex Rd. Neptune, NJ 07753
Tel: +1-732-922-9300, Fax: +1-732-922-1441
E-mail: andy.tydeman@us.tdk-lambda.com
Web: www.us.tdk-lambda.com/hp

CANADA

TMetrix
5805 Kennedy Road Mississauga,
Ontario L4Z 2G3
Tel: +1-905-890-2010, Fax: +1-905-890-1959
E-mail: lambda@aca.ca, Web: tmetrix.com

UK **IRELAND**

Pulse Power & Measurement Ltd.
65 Shrivenham Hundred Business Park
Watchfield, Swindon
Wiltshire, SN6 8TY
Tel: +44-1793-784389, Fax: +44-1793-784391
Email: sales@ppm.co.uk, Web: www.ppmpower.co.uk

FRANCE **BELGIUM** **SPAIN** **NETHERLANDS** **LUXEMBOURG**

TDK-Lambda France
ZAC des Delaches CS 41077, 9 rue Thuillere
91978 Villebon Courtaboeuf
Tel: +33 1 60 12 71 65, Fax: +33 1 60 12 71 66
Email: france@fr.tdk-lambda.com
Web: www.fr.tdk-lambda.com

GERMANY **AUSTRIA** **SWITZERLAND**

Guth GmbH
Spitzenbergstrasse 6
D – 73084 Salach
Tel: +49-7162-948930, Fax: +49-7162-9489399
Email: kontakt@guth-hv.de, Web: www.guth-hv.de

ITALY

TDK-Lambda Italy
Via dei Lavoratori 128/130
IT 20092 Cinisello Balsamo (MI)
Tel: +39-02-6129-3863, Fax: +39-02-6129-0900
Email: info.italia@it.tdk-lambda.com
Web: www.it.tdk-lambda.com

SCANDINAVIA **BALTICS**

Divisoft AB
Rallarvägen 41, SE-184 40 Åkersberga, Sweden
Tel: +46 8 540 248 09, Fax: +46 8 501 096 53
Email: iain@divisoft.se, Web: www.divisoft.se

ISRAEL **RUSSIA** **UKRAINE**

TDK-Lambda Israel Ltd.
Kibbutz Givat Hashlosha Tel-Aviv 48800
Tel: +972-3-9024-333, Fax: +972-3-9024-777
Email: info@tdk-lambda.co.il, Web: www.tdk-lambda.co.il

BRAZIL

Suplitec
Rua Sena Madureira 455, Belo Hte - 31340-000
Tel: +55-31-3498 1177, Fax: +55-31-3441 0841
Email: vendas@suplitec.com.br, Web: www.suplitec.com.br

MEXICO

AcMax De Mexico
Rosas 139 Col. Bugambilias. Puebla, Pue. C.P. 72580
Tel: +52-800-211-0060, Fax: +52-264-1445
Email: edaena@acmax.mx, Web: www.acmax.mx

JAPAN **KOREA**

Electronics Optics Research, Ltd
4-26-19 Koenji-Minami
Suginami-ku, Tokyo 166-0003
Tel: +81-333-145699, Fax: +81-333-142333
Email: imamura@eor.jp, Web: www.eor.jp

CHINA

TDK-Lambda Shanghai Office
2nd Floor of Building No.1, No.15 Guiqing Road,
Shanghai, 200233 P.R. China
Tel: +86-21-64850777, Fax: +86-21-64850666
Email:sales-sh@cn.tdk-lambda.com
Web: www.cn.tdk-lambda.com

MALAYSIA

TDK-Lambda Malaysia
No.7.3, 7th Floor, Jaya Shopping Center,
Jalan Semangat Section 14, 46100
Petaling Jaya Selangor, D.E
Tel: +60-3-7957-8800 Fax: +60-3-7958-2400
Web: www.tdk-lambda.com.my

SINGAPORE **PHILIPPINES** **THAILAND**

TDK-Lambda Singapore
1008 Toa Payoh North # 06-01/08
Singapore 318996
Tel: +65-6251-7211 Fax: +65-6250-9171
Web: www.se.tdk-lambda.com

INDIA

TDK-Lambda India
#526, Ground Floor, 10th Main, 7th Cross,
Jeevanbhimanagar, Bangalore 560 075, Karnataka, India
Tel : +91-80-43550500, Fax :+91-80-43550501
Email: mathew.philip@in.tdk-lambda.com
Web www.in.tdk-lambda.com

SOUTH AFRICA

PaR Systems (Pty) Ltd.
Pretoria, South Africa
Tel: +27-12-5480370, Fax: +27-12-5480447
Email: ndupreez@par.com
Web: www.sdilasers.com

93 008 009 Rev G

TDK-Lambda Americas Inc. 405 Essex Road, Neptune, NJ 07753 USA
Tel: +1 732 922 9300 Fax: +1 732 922 1441
www.us.tdk-lambda.com/hp

OPERATOR MANUAL FOR

402 Series High Voltage

POWER SUPPLY

Document: 83-487-001 Rev F

TDK-LAMBDA AMERICAS

405 Essex Road, Neptune, NJ 07753

Tel: (732) 922-9300

Fax: (732) 922-9334

Web: www.us.tdk-lambda.com/hp

Table of Contents

List of Figures

List of Tables

1. GENERAL INFORMATION

1.1. User Manual Content

This User's Manual contains the operating instructions, installation instructions and specifications for the ALE 402 series high voltage power supply. The instructions refer to standard power supply models, and include checkout, installation, and operation of the 402 series. Suggestions and requirements for connecting AC power, load cables and signal cables are given. Various operating modes and programming modes are described.

The model 402 is just one model in a broad family of HV power supplies covering the power range from 500J/sec to 30kJ/sec in a single package, and to 1MW and beyond in parallel systems. For more information please visit our web site at http://www.us.tdk-lambda.com/hp/product_html/high_volt.htm.

NOTE

This manual contains information, instructions and diagrams which apply to standard constructions. If special features or modifications have been installed, the instructions specific to that modification are contained in Addena and take precedence if conflicts exist. Please take care to refer to the correct information for your unit.

1.2. Introduction

TDK-Lambda Americas ALE model 402 are state of the art switch mode high voltage power supplies, designed to rapidly and efficiently charge capacitors in laser systems, modulators, pulse forming networks, and a broad range of pulse generator circuits, without the need for a series current limiting resistor. They can also be used in many continuous DC applications including beam power for RF devices such as magnetrons, gyrotrons, klystrons and electron beam loads.

The 402 series utilize a high frequency IGBT based series resonant inverter topology which operates as a constant current source. This makes the supply perfect for rapidly charging capacitors which represent a challenging load for conventional HV DC supplies using multiplier designs.

The 402 series is available with a choice of three different front panel configurations designed to suit different applications and end uses. All models feature the same comprehensive remote control interface which is detailed in Section 6.2.

The 402L Model is fully instrumented with front panel meters displaying output voltage and current, status LEDs, a key switch for OFF, LOCAL or REMOTE operation, HV ON/OFF push-button switches, and a 10 Turn output voltage control. The rear panel features external interlock, inhibit, remote control and slave (parallel operation) control connections.

The 402S Model can only be operated by remote control and features only status LEDs and a power switch on the front panel. The "S" Models have been designed to operate as a slave unit to the "L" Models or in systems where local control is not a requirement. As many 402 supplies as required, can be connected in parallel to provide greater output power.

The 402OEM features a blank aluminum front panel and can only be operated by remote control.

1.3. 402 Overview

1.3.1. Features

- 4kJ/sec capacitor charging power, 4kW in continuous DC applications.
- Output voltages from 0-1kV to 0-50kV.
- Rep rates from single shot to kilohertz.
- Local or remote operation (L Model) with comprehensive control interface.
- Cost effective blank front panel version for OEM applications.
- Constant current topology for rapid efficient charging.
- Parallel operation (master/slave) for high power applications.
- Compact Air Cooled design.
- Passive Power Factor Correction reduces RMS current draw.

1.3.2. Benefits

- Lightweight switchmode design.
- Rack mount chassis configuration.
- Low stored energy provides greater safety.
- Constant current design requires no lossy current limit resistance.
- Immunity to external EMI.

1.3.3. Applications

- Charging capacitors and capacitor banks.
- Powering pulse forming networks/modulators.
- Powering lasers: Excimer, flashlamp pumped dye, Yag, CO_2, etc.
- Continuous power for RF tubes – magnetron, gyrotron, TWT, klystron etc.
- Electron beam applications.
- DC power source for pulsed hard-tube and solid state modulators.

1.4. Capacitor Charging Technology

Capacitor charging applications require a power supply designed specifically for the task. The 402 series supplies allow capacitors to be charged in pulse forming networks and modulators in a very fast, efficient and controllable manner.

The units are compact high power constant current sources that can linearly and rapidly charge a capacitive load to high voltage. Once the load capacitor is charged to the programmed voltage, the supply will switch over to a voltage regulation mode and maintain the load voltage at the programmed level, until the load is discharged.

The flexible design of the 402 allows the unit to be ordered with (L model) or without (S and OEM model) the front panel controls and meters. Front panel controls are ideal in applications where local control and read backs are necessary, such as R&D, laboratory use and diagnostics. All front panel controls and indicator signals are available at the rear panel remote control connector regardless which panel option (L, S, or OEM) is selected.

The unit is self-contained, requiring only AC power and appropriate controls. Several units may be connected in parallel for higher power operation. There is no theoretical limit to the number of units that may be paralleled. Typically one master unit and one or more slave or OEM units may be used to obtain as much output power as necessary. The 402 is also ideally suited to charge reservoir capacitors in resonant charging circuits where high rep rates (several kilohertz) are required, such as in metal vapor lasers or solid-state modulators.

1.5. Continuous DC Operation

Although the 402 series has been designed for capacitor charging applications, they can also be used as a continuous DC High Power Source for RF tubes such as klystrons, TWTs, or other DC loads such as DC-DC converters. The DC option must be specified when ordering, and the supply will be factory setup and tested with a continuous DC load. When 402 supplies are operated in continuous DC applications it is often necessary to add an external capacitor between the load and ground to improve the ripple performance of the unit. Our online Application Note 505 describes operating capacitor charging supplies in DC applications, and gives guidance in determining the size of any additional external filter capacitance required. App Note 505 can be found at:

http://www.us.tdk-lambda.com/hp/pdfs/application%20notes/93008505rC.pdf

Consult the factory before connecting parallel units in continuous DC applications.

1.6. Additional Features:

- Internal contactor and fuses for AC disconnect and protection
- Standard AC power and control connectors
- Documentation Manual Including -
  Installation, check out, suggested remote interfaces and control circuits
- 10 ft (3m). Output cable is standard, other lengths are optional.

1.7. Safety Precautions

All 402 power supplies are designed to minimize the risk of fire or shock hazard. This instrument received comprehensive mechanical and electrical inspection prior to shipment. Nevertheless, certain safety precautions must be observed. Only TECHNICALLY QUALIFIED SERVICE PERSONNEL familiar with the principles of electrical safety should operate this supply. The power supply SHOULD NOT BE EXPOSED TO WATER OR MOISTURE OR DUSTY ENVIRONMENTS. Electrical safety must be maintained at all times.

Lethal voltages are developed within the power supply's enclosure and at the output cable. Therefore, the cover may not be removed by the user (see Warranty in preamble section for variance). Also, the large capacitors in the supply may store power even after the AC input line is removed. ALLOW AT LEAST 40 SECONDS DISCHARGE TIME between removing the AC input line and opening the cover. ALSO, ALLOW AT LEAST 40 SECONDS between switching the AC power off and switching it on again.

1.7.1. This product is designed for Indoor use.

1.7.2. This product is designed for pollution degree 2.

1.7.3. This product is designed for Transient Overvoltage Category II

1.7.4. Ensure all covers are in place and securely fastened before switching ON the AC power.

1.7.5. Proper grounding from the input AC power is required to reduce the risk of electric shock. Ensure that the AC Protective Earth Ground connection has at least the same gauge wire as the supply leads shown in Table 2.

1.7.6. Use extreme caution when connecting AC input power, and never apply the incorrect input voltage, refer to ratings label.

1.7.7. Use extreme caution when connecting the high voltage output cable to the load.

1.7.8. Ensure all load capacitors are completely discharged prior to connection. Never handle the output cable when the power supply is operating.

1.7.9. Never attempt to operate the power supply in any manner not described in this manual.

1.7.10. Never remove DANGER and WARNING labels from the power supply. Replace lost or damaged labels immediately.

1.7.11. The power supply should only be serviced by factory authorized personnel.

1.7.12. No user maintenance is required.

1.8. Model Number Format

The model numbering system for the 402 Series power supply includes symbols for features and options. They are separated by dashes.

Examples are: 402L-10kV-POS-400VAC and 402S-20kV-POS-DC.

The 402 is available with three front panel configurations, the L, S, and OEM. The choice of panel configuration is dependant upon the installation and system requirements. See section 5 for further details.

Table 1 shows a partial listing of the model description format for the 402 Power Supply family. For additional options, the customer may contact the Sales Department at TDK-Lambda Americas. Special options are typically shown as a four-digit suffix to the model number.

402(model) - (voltage) - (polarity) - (mode) - (input) - (options)

Model (L, S, OEM)
Output Voltage Range kV
POS or NEG Polarity

Mode		
Standard	Capacitor Charging	Blank
DC	Continuous DC Operation	DC

AC INPUT VOLTAGE		
	Input	Suffix
Standard	180-264VAC, 50-60Hz, 3ϕ (20A Max)	Blank
400VAC Option	340-460VAC + N, 50-60Hz 3ϕ (15A Max)	400VAC

OPTIONS	
5V Programming	5V
Low Enable	EN
Latching Overload	LP
AC Contactor (OEM only)	CT
Custom cable length	xxxx

Table 1 :402 Model Description Format .

2. SPECIFICATION

2.1. Average Charging Power	4,000 Joules/sec ($\frac{1}{2}CV^2$ x Rep Rate)
2.2. Peak Charging Power	5,000 Joules/sec ($\frac{1}{2}CV^2 / t_{charge}$)
2.3. Average DC Power	4,000 Watts
2.4. Output Voltage Range	1, 2, 4, 5, 10, 15, 20, 30, 40, 50kV, variable from 10-100% of rated. Other voltages on request, please contact the factory.
2.5. Polarity	Available as fixed Positive or Negative. Please specify at time of ordering
2.6. HV Output Cable	1-39kV Models - DS2124 Coaxial cable with proprietary HV connector
	40-50kV Models - DS2214 Coaxial cable with proprietary HV connector
2.7. HV Insulating Medium	Exxon Mobil Univolt N61B or equivalent insulating oil
2.8. AC Input Voltage	200-240VAC (180-264), 3Ø or380-440VAC (340-460), 3Ø + N, 50-60Hz Please specify at time of ordering
2.9. AC Input Current	20A/15A
2.10. AC Connector	UL/CSA approved terminal block. 3Ø + GND for 200-240VAC, 3Ø + N + GND for 380-440VAC
2.11. AC Line Contactor	UL/CSA approved AC line contactor (standard on 402L and 402S, option for 402OEM)
2.12. Power Factor	Passive PFC pf = 0.85 at full load and nominal AC line
2.13. Efficiency	Better than 85% at full load
2.14. Front Panel	402L - Voltage Control, Voltage & Current Meters, Status Indicators
	402S - On/Off Switch, Status Indicators
	402-OEM - Blank front panel
2.15. Stability	0.2% per hour after 1 hour warmup
2.16. Temperature Coefficient	100ppm per °C typical
2.17. Stored Energy	Less than 0.3J all models
2.18. Pulse to Pulse Repeatability	±2% to 1000Hz, consult factory for higher rep rates
2.19. Dimensions - inches (mm)	19 (483) W x 7 (178) H x 17 (432) D
2.20. Weight - lbs (kg)	65 (30)
2.21. Ambient Temperature	Storage: -40 to +85°C. Operating: -20 to +45°C
2.22. Altitude	Storage: 40,000ft (12,000m), Operating: 9,900ft (3,000m)
2.23. Humidity	10-90%, non-condensing
2.24. Protection	Open/short circuits, Overloads, Arcs, Overtemp, Overvoltage, Safety Interlock
2.25. Remote Control (all models)	Via 25-pin D-sub connector on rear of unit, Signals include, Vprogram (0-10V), HV Enable/Reset, Inhibit, Summary Fault, Load Fault, Vanalog, Vpeak
2.26. Accessories	10ft HV cable, operating manual

2.27. Options	EN - Low Enable. Replaces standard high enable
	5V - 0-5V Analog programming. Replaces standard 0-10V programming.
	LP - Latching Overload Protection, requires HV reset after overload fault
	DC - Continuous DC operation
	CT - AC line contactor (option for 402OEM only, standard on 402L and 402S)
	Double terminated HV cable, and mating bulkhead connector
2.28. Ordering Info	Model - XXkV - POS (or NEG) - YYYVAC - ZZ (options)
2.29. Ordering Examples	402L-10kV-POS, 402S-1kV-NEG-DC, 402-OEM-50kV-POS-400VAC
All specifications subject to change without notice	

3. OUT OF BOX INSPECTION

3.1. Visual Inspection

Prior to shipment, this instrument was inspected and found to be free of mechanical and electrical defects. As soon as the unit is unpacked, inspect for any damage that may have occurred in transit. Verify the following:

a) Check the operation of the front panel control (knob should rotate smoothly).
b) Confirm that there are no dents or scratches on the panel surfaces.
c) Check front panel meters and LEDs for any broken or cracked lenses.

If any damage is found, follow the instructions in Section 3.3.

3.2. Electrical Inspection

Before the power supply is installed in a system, verify that no internal damage occurred during shipping. A set of simple preliminary electrical test can be performed if desired. These tests are described below.

NOTE
The sequences described are for L model supplies with local controls, for S and OEM models the corresponding signals must be applied and monitored through the remote control interface.

3.2.1. Test 1

Purpose: Verify general logic operation, generate maximum output current, and check overload protection circuits. With AC power "OFF" and disconnected, short the HV output by connecting the center conductor of the output cable to its return shield (braid). This dead short will allow the unit to generate full output current at zero voltage.

1. Set the output voltage control to zero. Connect AC power to the unit. Turn "ON" the AC power front panel switch.
2. Turn the front panel keyswitch to the LOCAL position (if applicable). Press the HV "ON" button and turn up the HV control until the power supply is generating output current into the dead short. The current meter will indicate max. current. The voltage meter will read zero and the power supply will intermittently turn on and off indicating the "overload" condition. The unit should continue to indefinitely cycle in this mode with a 1 second period. (The power supply will go into overload when max. current is drawn for more than half a second).
3. Turn off the HV and AC power switches.

This test indicates the inverter section is generating maximum current and the logic and overload circuitry works correctly.

3.2.2. Test 2

Purpose: Verify that the power supply generates maximum rated voltage, and the regulation and feedback circuits are functioning.

1. With AC power OFF and disconnected, connect an appropriate load capacitor to the power supply output cable. Select the capacitor size so the charge time is several milliseconds or more.
2. Prepare to charge the capacitor. NOTE: Operating a 402 power supply into an open circuit (no load operation) will instantly damage the power supply's HV output diodes. Make sure the load (capacitor) is connected and the HV output cable is securely inserted and connected.

3. Turn the voltage control on the front panel all the way down to zero (counter clockwise), apply AC power and press the HV ON button. By turning up the HV control knob the capacitor will charge to the voltage indicated on the front panel voltmeter. The power supply may be turned all the way up to its max. output voltage provided the load capacitor is sufficiently rated.
4. By turning the voltage control down or depressing the HV OFF button, the capacitor will slowly "bleed" down through the internal voltage divider resistors used for regulation feedback. Use an external discharge wand to ensure the capacitor is fully discharged.

Test #2 indicates the HV section is working correctly. Tests 1 and 2 generally indicate the unit is functioning as designed. Although 100% power had not been generated, these two tests give greater than 90% confidence that the unit is not damaged.

If any inconsistency from the above test procedure is noted, do not hesitate to call TDK-Lambda Americas Customer Service for assistance.

3.3. Contacting TDK-Lambda Americas Customer Service

When contacting customer service locate the product description, part number and serial number from the label located on the rear of the unit, and have this information available.

Phone: (732) 922-9300 x 342 E-mail: hp.service@us.tdk-lambda.com
Fax: (732) 922-1441

Customer Service, or an approved Service Center, should be contacted if:

- The power supply is mechanically or electrically damaged.
- The power supply requires on-site calibration, or replacement warning decals.
- The customer has questions about a special application that is not described in this manual.

Normally, the customer may *NOT* open any chassis covers that have a warranty seal. Breaking a seal will void the warranty.

At the discretion of TDK-Lambda Americas, the customer may be granted permission to break the warranty seal and open the chassis covers. Customer Service shall confirm the permission by sending a replacement seal. Once the unit has been serviced, the customer shall close the cover and apply the replacement seal adjacent to (not on top of) the broken seal.

3.4. Returning Defective Units

If a unit needs to be returned to the factory for repair, the factory must first assign an RMA number. Please complete and send the online RMA request form at http://www.us.tdk-lambda.com/hp/RMA_request.htm and an RMA number will be assigned. Follow the return instructions on the form or at http://www.us.tdk-lambda.com/hp/returns.htm.

4. INSTALLATION

4.1. 19-Inch Rack Mounting

This power supply is intended for mounting in a conventional 19-inch equipment rack. It's 7 inch height makes it a "4U" size instrument. The rack should enclose the sides, top and back to protect the operator from electrical shock and protect the supply from environmental contamination.

Never install the 402 so its weight is supported only by the front panel screws!

The 402 must never be installed without support in the back or sides of the unit. The 402 should be mounted on support rails or chassis slides –such as General Devices CTS-124- or on a suitable shelf or supports inside the rack.

4.2. Ventilation Requirements

This instrument is fan cooled. Sufficient space must be allocated so that a free flow of cooling air can reach the back and sides of the instrument when it is in operation. Ensure these clearances are met for adequate air flow:

- 4 inches (10 cm) rear
- 1 inch (2.5 cm) on each side.

Cooling air enters through the rear of the unit, and is forced out of the side panels. This power supply should not be operated with its cover removed since the cover directs the flow from the internal fan.

When operating in an enclosed system, care must be taken to ensure the ambient inlet air to the power supply does not exceed the maximum operating temperature of 45°C. This may require addition of a system heat exchanger.

4.3. Orientation

The power supply must be operated in a level horizontal orientation. More than a quarter of an inch (6.25mm) difference in height in any direction could potentially cause an arcing condition in the high voltage tank and should be avoided.

4.4. AC Power Connection

For 200-240VAC models, the maximum voltage allowed between any two AC input terminals is 264VAC. For 380-440VAC models, the maximum voltage allowed between any two AC input terminals is 460VAC. If this voltage is exceeded, catastrophic damage will result, that is not covered by TDK-Lambda Americas standard warranty.

The customer's AC power line connects to the 402 via a UL/CSA approved 5 position terminal block on the rear panel of the unit (see Figure 1). Only use a power cable with the correct voltage and current rating (see Table 2). The ground wire must be equal to or larger than the recommended gauge. Secure grounding of the input AC power is required to reduce the risk of electric shock. The metal chassis of the power supply is grounded through the earth wire at the input AC power terminal block. Use extreme caution when connecting input AC power and never apply the incorrect input power.

An external switch or circuit breaker with the following parameters must be used as means of disconnection:

a) Rated voltage not ess than maximum rated voltage of the power supply

b) Rated current not less than 150% of the power supply rated current

The switch or cirucuit breaker must be located in proximity to the power supply and within easy access of the operator. The switch or circuit breaker must be marked as disconnecting device for the equipment.

> ⚠ The Protective Earth Ground ⏚ must be connected before applying AC Line Power to the 402.

Connect the three lines of the input power to the L1, L2, L3 terminals and the earth ground to the terminal marked with the ground symbol (⏚). No neutral connection is required for the 200-240VAC configuration. For models with the 380-440VAC input configuration (340-460VAC) the neutral wire must be connected to terminal marked N. The power connections are not phase rotation sensitive, so any phase can be connected to any of the AC inputs.

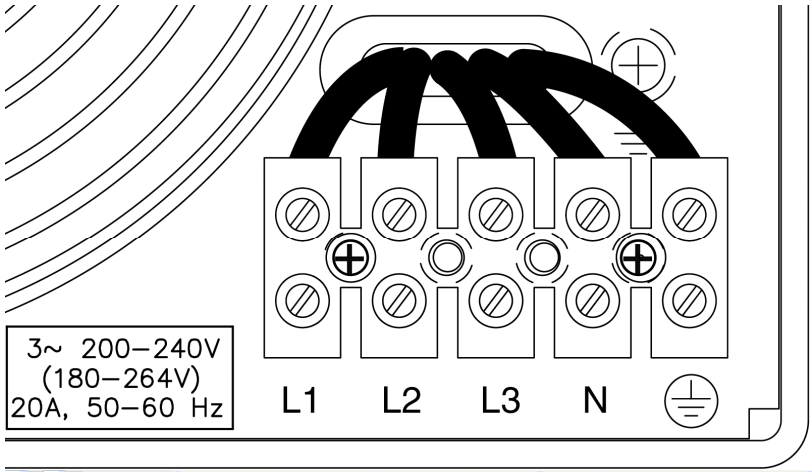

Figure 1 AC Input Terminal Block

If the power supply was purchased with the 400VAC input configuration, in addition to the three phases, the neutral wire must be connected to terminal marked N. Failure to connect the Neutral wire in a 400VAC unit may result in damage to the supply.

AC INPUT VOLTAGE	MODE	RECCOMENDED AC INPUT CABLE SIZE & RATING
200-240VAC (180-264VAC), 50-60 Hz, 3ϕ	Cap Charging	6mm^2/10 AWG, 600V
	Continuous DC	6mm^2/10 AWG, 600V
380-440VAC (340-460VAC), 50-60 Hz, 3ϕ	Cap Charging	6mm^2/10 AWG, 600V
	Continuous DC	6mm^2/10 AWG, 600V

Table 2 Recommended AC Input Cable

The AC input rating is marked on the rear terminal of the power supply. The rating is also part of the unit's model description shown in Table 1.

4.5. Connecting the High Voltage Output

> Ensure that the power supply is off and disconnected from the AC input power and that all load capacitors are discharged and shorted to ground before making any connections. Never handle the HV cable while the supply is operating. Never operate the supply without a load capacitor connected.

Before connecting the HV output cable, inspect the cable and check for signs of damage.

Always use the HV connector and cable provided with the power supply or an equivalent substitute provided by TDK-Lambda Americas. Fully insert the connector end of the HV cable and tighten the locking nut only "hand tight".

When operating above 20kV or 200Hz rep rate, silicone grease (such as Dow Corning DC-4) must be applied to the HV cable before insertion into the HV connector. The grease is used to displace air in the connector and reduce long-term corona effects. A cable greasing procedure is available for download from the TDK-Lambda Americas web site.

The load ground must be connected to the chassis ground through a separate safety ground cable with a minimum wire size of 10 AWG in addition to the HV output cable shield (see Figure 2).

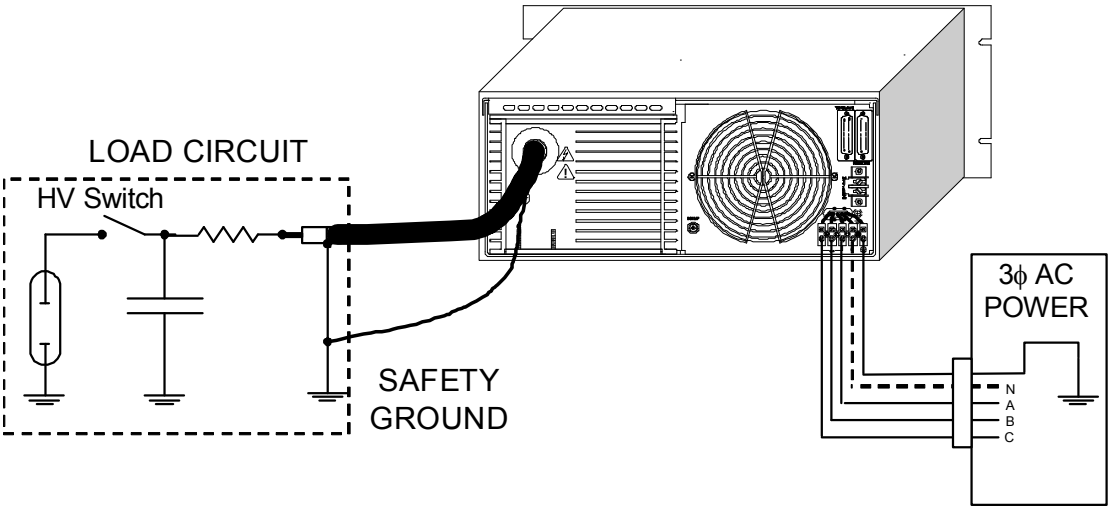

Figure 2 Typical Load Circuit Connection

Some peak current will flow out of the power supply during discharge and return through the HV return and system chassis. This current comes from voltage reversal in underdamped systems and from normal discharge of filter and cable capacitance. The path for this current should not parallel control signal returns since the resulting voltages could interfere with normal system operation.

Currents due to voltage reversal, particularly at high repetition rates can damage the power supply. Generally, a resistor in series with the HV output can be added to limit this current to an acceptable level, but an additional clamp diode may also be required.

Refer to Application Note 517 (available from the factory or at http://www.us.tdk-lambda.com/hp/product_html/high_volt.htm) for more detailed information.

Dress the high voltage cable to create a gentle curve ensuring there are no sharp bends as this will tend to reduce the cable's insulation strength. Strain relieve the load end of the high voltage cable to prevent breaking of, or damage to the center conductor. Keep the HV cables as distant as possible from the input power and the control signals.

To connect the HV cable to the load it is necessary to remove the cable jacket, shield, and any semiconducting layer (if applicable) that remains on the cable insulation after removing the shield.

The cable outer jacket should be removed to reveal the cable shield. At least 12” or 300mm of outer jacket should be removed for suitable voltage hold-off. The exposed shield should be trimmed to an appropriate length and terminated with a ground connection.

For models shipped with DS2214 HV cable (>40kV rated voltage), after the shield is removed, the black semiconducting layer is exposed. This layer should be very carefully removed using a sharp craft knife, and a peeling action. Once the semiconducting layer is removed, the exposed EPR insulation should be cleaned with IPA or an equivalent solvent. If any of the semiconducting layer remains on the HV cable insulation it may cause the cable termination to fail.

For models shipped with the DS2124 HV cable (<40kV rated voltage), there is no semiconducting layer to be removed from the cable insulation, however the exposed polythene cable insulation should be cleaned with IPA.

5. CONTROLS, INDICATORS, CONNECTORS

5.1. Front Panel Layout (L Model)

The 402L series power supply is equipped with a fully instrumented front panel featuring output voltage control, voltage and current metering, and comprehensive status LEDs, along with local/remote mode keyswitch, and power on switch. The 402L can be operated locally from the front panel or remotely via the control connector located on the rear panel (see Section 6.2). Front panel layout of the 402L power supply is shown in Figure 3 below.

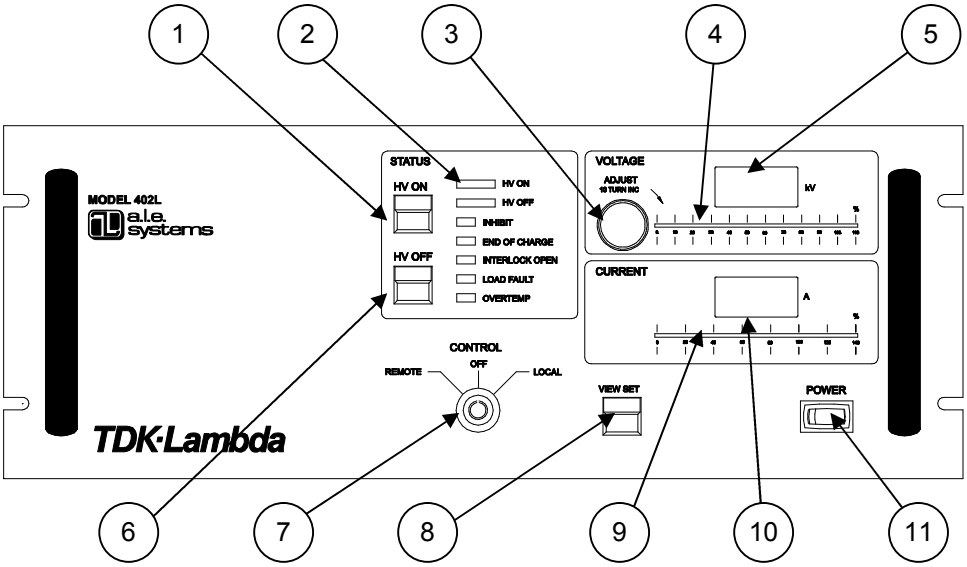

Figure 3 402L Front Panel Controls and Indicators

REF	DESCRIPTION	NOTE	SECTION
1	HV ON Push Button	Turns on HV output	5.2
2	Status LEDs	Indicates status of supply and presence of any faults	5.3
3	Local Voltage Set	10 turn pot for setting output voltage in local mode	5.4
4	Voltage bar graph	Analog bar graph showing output voltage (%)	5.5
5	Voltage Display	Digital display of output or set voltage	5.6
6	HV OFF Push Button	Turn off HV output	5.7
7	Off/Local/Remote Key	Switches control between remote, local, and off modes	5.8
8	View set push button	Push to view the output voltage set point in local mode	5.9
9	Current bar graph	Analog bar graph showing average output current (%)	5.10
10	Current Display	Digital display of average output current	5.11
11	Power switch	Turns on/off power to auxiliary circuits	5.12

Table 3 Front Panel Controls and Indicator Functions (L Model)

The front panel controls/indicators are described in detail in the following sections.

5.2. HV ON Push Button (Ref 1)

DO NOT DEPRESS THE HV ON PUSH-BUTTON UNLESS A SUITABLE CAPACITIVE LOAD IS CONNECTED TO THE POWER SUPPLY'S OUTPUT CABLE, AND THE LOAD IS CORRECTLY GROUNDED.

The HV On push button is a momentary switch that when depressed turns on HV output in local mode (keyswitch in local position) only if there are no faults present within the supply. If faults are present when the HV On button is pushed the supply **will not turn on**, and both the HV ON and HV Off LEDs will illuminate. When both the HV On and HV Off LEDS are illuminated together this indicates a Summary Fault. If the keyswitch is in the remote position the HV ON push button has no function.

5.3. Status LEDs (Ref 2)

There are 6 status LEDs on the front panel, indicating the state of the HV Output circuit and various fault detection circuits in the control system.

5.3.1. HV ON LED

The HV ON LED indicates that the HV output circuit is enabled and the supply will deliver output current if it is not inhibited by an external inhibit input. If the HV ON and HV OFF LEDs are illuminated together this indicates a Summary Fault. HV ON LED is active in local and remote modes.

5.3.2. HV OFF LED

The HV OFF LED indicates that the HV output circuit is disabled and the supply cannot deliver output current. If the HV OFF and HV ON LEDs are illuminated together this indicates a Summary Fault. HV OFF LED is active in local and remote modes.

5.3.3. Inhibit LED

If the Inhibit LED is illuminated it indicates the presence of an active inhibit signal, and the supply will not deliver charging current after the HV ON button is pushed. Inhibit is applied either via the rear panel mounted BNC connector or either inhibit input via the remote control connector. Inhibit LED is active in local and remote modes.

5.3.4. END OF CHARGE LED

The END OF CHARGE or EOC LED indicates that the load or output voltage has reached the programmed voltage. EOC LED is active in local and remote modes.

5.3.5. Interlock Open LED

The interlock open LED illuminates if the safety interlock circuit is not closed. The power supply cannot be turned on if the interlock loop is open. If the interlock loop is opened when the unit is running (ie when HV in ON), the unit will turn off with a latching fault, requiring an HV ON/OFF/ON reset cycle before it can be restarted. Interlock Open LED is active in local and remote modes.

5.3.6. Load Fault LED

The load fault LED indicates the presence of a fault in the load circuit due to a short circuit large external capacitor, or an output Overvoltage. An output Overvoltage condition will cause a latching fault requiring an HV ON/OFF/ON reset cycle before it can be restarted. Load Fault LED is active in local and remote modes.

5.3.7. Overtemp LED

The overtemp LED indicates an inverter overtemperature condition internal to the supply. The temp fault will clear once the temperature is below the fault threshold, but the unit will not restart without a reset cycle. Overtemp LED is active in local and remote modes.

5.4. Local Voltage Set (Ref 3)

The local voltage set control is an analog 10-turn potentiometer for adjusting the output voltage from zero to full rated output. This control will only operate in local mode. If the supply is operated in remote mode the local voltage set control has no effect.

5.5. Voltage bar graph (Ref 4)

The voltage bar graph is a 'quick view' analog percentage indication of the voltage measured at the power supply output. Bar graph is active in local and remote modes.

5.6. Voltage Display (Ref 5)

The Voltage Display is a 4 digit LED indicator showing the voltage measured at the power supply output. This display momentarily shows the output program voltage after the View Set button is depressed. Voltage Display is active in local and remote modes.

5.7. HV OFF Push Button (Ref 6)

The HV OFF push button is a momentary switch that when depressed turns off HV output. If the power supply shuts off with a summary fault (indicated by HV ON and HV OFF LEDs both illuminated), then this condition can be reset by pushing the HV OFF, HV ON, HV OFF button sequence. If the supply is operated in remote mode the HV OFF push button will still function.

5.8. Off/Local/Remote Keyswitch (Ref 7)

DO NOT MOVE THE KEYSWITCH POSITION FROM OFF TO LOCAL OR REMOTE UNLESS A SUITABLE CAPACITIVE LOAD IS CONNECTED TO THE POWER SUPPLY'S OUTPUT CABLE, AND THE LOAD IS CORRECTLY GROUNDED.

The Off/Local/Remote Keyswitch switches the 402L power supply operating modes between OFF, LOCAL, and REMOTE. The key can be removed in the OFF position to prevent unauthorized use. If the switch is in the LOCAL position the supply will operate from the front panel. In the remote position the supply can only be operated via the remote control interface. An L model supply can simulate an S or OEM model with the key in the remote position.

5.9. View set push button (Ref 8)

The view set push button changes the reading on the digital voltage display from the power supply output voltage, to the programmed voltage set on the local voltage set potentiometer. After pushing this button the set voltage is displayed for approximately 3 seconds.

5.10. Current bar graph (Ref 9)

The current bar graph is a 'quick view' analog percentage indication of the average current delivered by the supply. Bar graph is active in local and remote modes.

5.11. Current Display (Ref 10)

The Current Display is a 4 digit LED indicator showing the average current delivered by the power supply output. Current display is active in local and remote modes.

5.12. Power switch (Ref 11)

The power switch connects AC input power to the control circuitry and causes the internal AC contactor to close if the interlock loop is closed.

5.13. Front Panel Layout (S Model)

The 402S series power supply is equipped with a partially instrumented front panel featuring status LEDs, and a power on switch. The 402S can only be operated remotely via the control connector located on the rear panel (see Section 6.2).

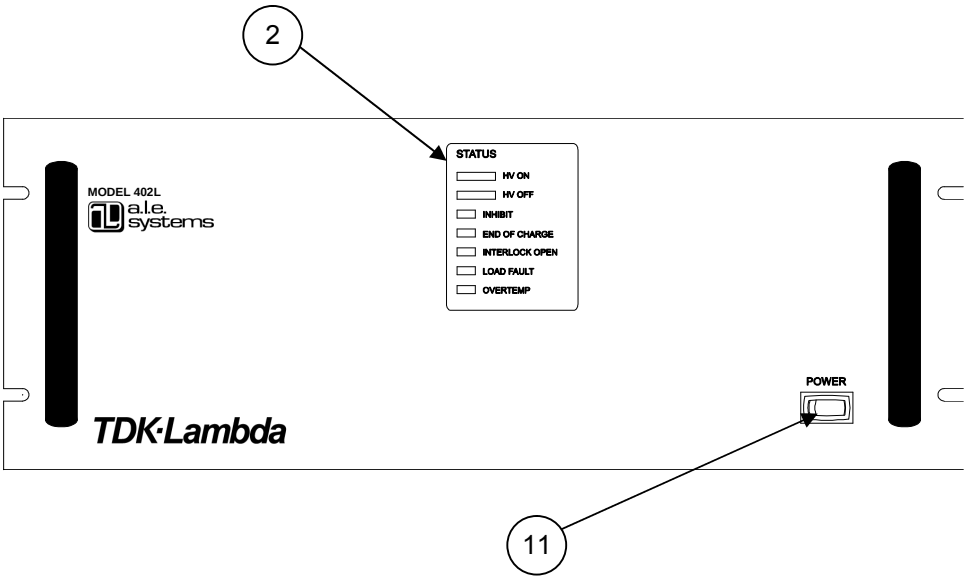

Figure 4 Front Panel Controls and Indicators (S Model)

REF	DESCRIPTION	NOTE	SECTION
2	Status LEDs	Indicates status of supply and presence of any faults	5.3
11	Power switch	Turns on/off power to auxiliary circuits	5.12

Table 4 Front Panel Controls and Indicators (S Model)

A description of the function of the LEDs and the power switch are given in sections 5.3 and 5.12 respectively.

5.14. Front Panel Layout (OEM Model)

The 402OEM front panel is completely blank and features no indicators or switches.

5.15. Rear Panel Layout (L Models)

All of the interconnect and HV connections for the 402L are located on the power supply rear panel. Figure 5 shows the rear panel layout and location of the various connectors.

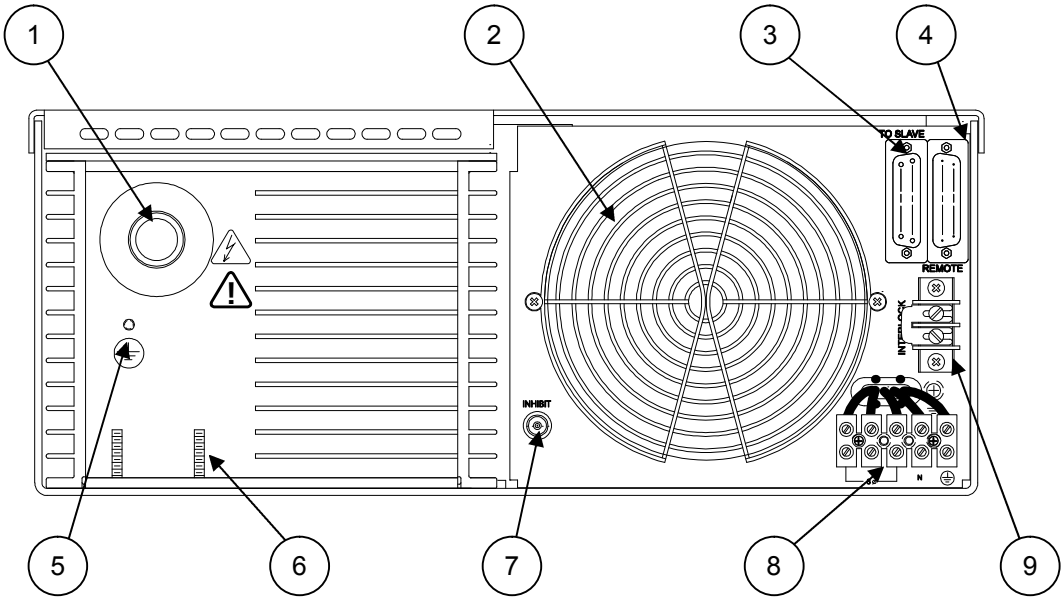

Figure 5 402L Rear Panel Connections

REF	DESCRIPTION	NOTE	SECTION
1	HV Output	HV Output connector, mates with supplied cable via proprietary connector	5.15.1
2	Cooling fan	Main AC cooling fan. Leave 4" clearance	5.15.2
3	Slave Interface	25pin male sub-D type plug for control of slave supplies in a parallel system (AMPHENOL 17BDFRA25P)	5.15.3
4	Remote Interface	25pin sub-D type receptacle for remote control of supply in remote mode (AMPHENOL 17BDFRA25S)	5.15.4
5	GND stud	10-32 UNC ground stud	5.15.5
6	GND stud	M5 ground stud (2 positions)	5.15.6
7	Inhibit input	BNC input to allow inhibit of output current	5.15.7
8	AC Input	5 position terminal block for AC input power	5.15.8
9	Interlock	Terminal for connection to interlock circuit. Contacts are isolated from ground and require dry contact closure for supply to operate.	5.15.9

Table 5 402L Rear panel Functions

The function of each item in Table 5 is described in the following sections.

5.15.1. HV Output Connector (Ref 1)

Connector socket for mating HV cable supplied with unit. The connector should be kept clean and free from debris at all times. If supply is operated at 20kV or 200Hz rep rate or above the cable should be greased to ensure corona free operation. The cable connector should only be hand tightened, never use a wrench or apply excessive force.

5.15.2. Cooling Fan (Ref 2)

Allow at least 4 inches of clearance and do not obstruct clear air flow around the fan. Air is pulled into the unit by the fan, and exhausts at the front of the side panels.

5.15.3. **Slave Connector (Ref 3)**

A 25 pin D-sub female connector that allows connection to a slave supply for increased power operation.

5.15.4. **Remote Connector (Ref 4)**

A 25 pin D-sub male connector that allows remote operation and monitoring of all power supply functions when the unit is operated in REMOTE mode.

5.15.5. **Safety Ground (Ref 5)**

10-32UNC threaded safety ground stud installed in HV tank. Should be used for additional safety ground cable between supply and load circuit.

5.15.6. **Safety Ground (Ref 6)**

M5 threaded safety ground stud installed in HV tank. Should be used for additional safety ground cable between supply and load circuit.

5.15.7. **INHIBIT BNC (Ref 7)**

The inhibit BNC input is a standard BNC socket that allows an external connection to a pulse generator or control system and gives the user control of the power supply output current. A logic 1 (10-15V) input will inhibit the supply (shuts off the output current) and a logic 0 (ground or open) allows the supply to operate.

5.15.8. **AC Input Terminal (Ref 8)**

Main AC input power terminal block see section 4.4 for further details. For 200-240VAC connect three phases and ground. For 380-440VAC option connect three phases, Neutral and Ground. AC input is not phase rotation sensitive.

5.15.9. **Interlock Terminal strip (Ref 9)**

Provides an external dry contact connection for the customer to allow interlock functions to be controlled. The interlock terminals should be connected to any safety interlock circuitry in the power supply installation. When the interlock is open the AC line contactor disconnects the AC line from the power circuitry. The power supply is shipped with a factory installed shorting link across the interlock terminals.

NOTE
The Interlock terminals are chassis referenced 24VAC circuits and should never be connected to ground.

5.16. Rear Panel Layout (S Models)

The 402S rear panel is similar to the 402L except these is no SLAVE or INHIBIT BNC connector. If a number of units are to be connected in parallel, a daisy chain type ribbon cable should be used to connect the supplies together. See section 6.4 for more details.

Note:
The numbers in Figure 6 refer to Table 5.

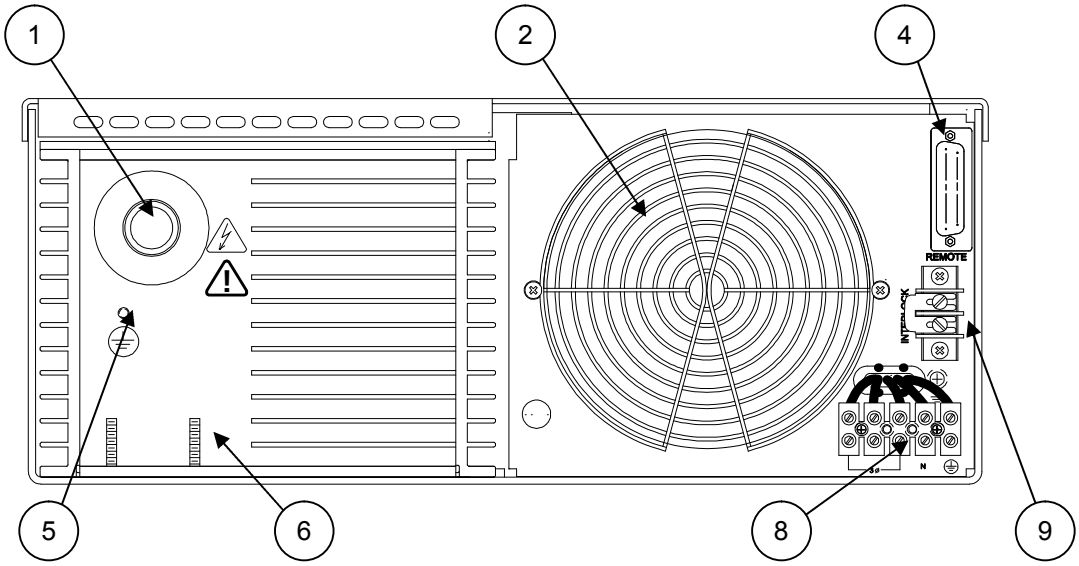

Figure 6 402S Rear Panel

5.17. Rear Panel Layout (OEM Models)

The 402OEM rear panel is similar to the 402S except there is no interlock terminal, unless the CT option is installed. If a number of units are to be connected in parallel, a daisy chain type ribbon cable should be used to connect the supplies together. See section 6.4 for more details.

Note: *The numbers in Figure 7 refer to Table 5.*

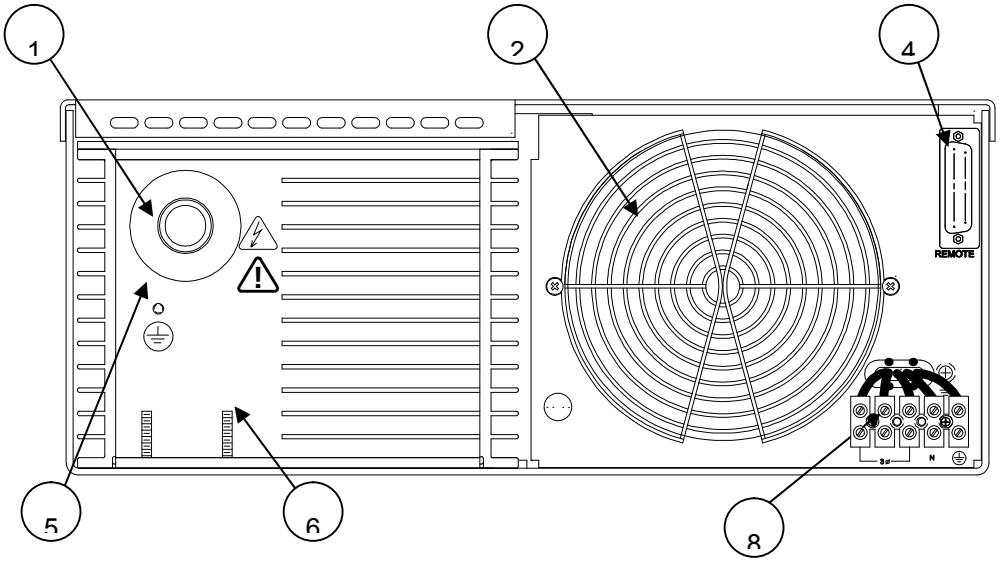

Figure 7 402OEM Rear Panel

5.18. REMOTE CONTROL CONNECTOR PIN DIAGRAM

Figure 8 shows a summary of the remote control signals on the connector labeled 4 in Figure 5 through 8. The connector is a 25-pin sub D-type receptacle (female).

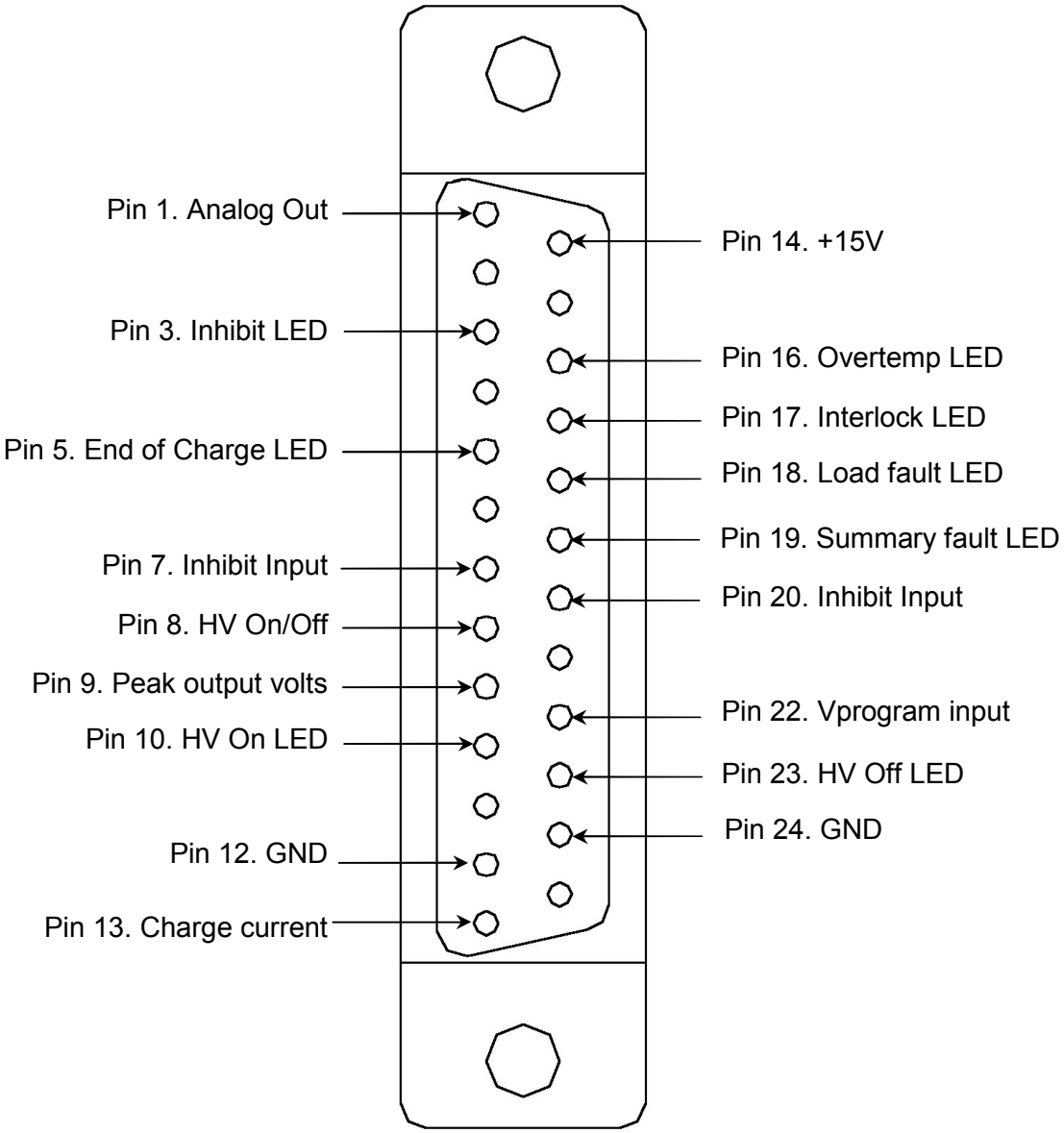

Figure 8 Remote Interface Connector and Signals.

6. OPERATING INSTRUCTIONS

The 402 power supply is designed for operation in two modes. The first mode is local, where the power supply can be controlled from the front panel. Local operation is only possible with the L model supply. The second mode is remote, where control signals are passed via the 25pin remote connector. Remote operation is possible with all 402 model power supplies (L, S, or OEM).

6.1. Local Operation (402L only)

The model 402L has full front panel instrumentation and controls for use in laboratory, prototype or OEM systems. The front panel controls include power on/off, remote/local and HV on/off switches, output voltage adjust, view set switch, digital voltage and current meters, quick reference bar graphs and status indicators. An internal AC contactor is included which is controlled by the front panel power switch and the interlock terminals located on the rear of the unit. A BNC connector is provided on the rear panel for easily connecting a pulsed INHIBIT signal when operating from the front panel. The model 402L can be operated as a "master" unit in parallel with several model 402S or OEM "slave" units for increased output power. Refer to Section 6.4 "Paralleling Units".

Before operating the power supply ensure a load capacitor is connected between the power supply output, and the other terminal of the capacitor is connected to ground or the appropriate point in the load circuit. Failure to correctly connect a capacitive load prior to operating the power supply may result in damage.

HIGH VOLTAGES MAY POTENTIALLY EXIST FROM THIS POINT FORWARD.

The power supply should be connected to 3 phase AC power as described in section 4.4. The interlock terminals should be closed either with the supplied shorting link or by an isolated external dry contact. Follow the steps below;

1. Ensure the output voltage potentiometer is turned fully counter clockwise.
2. Turn on the AC power switch, the cooling fan should start and the front panel indicators will illuminate.
3. Turn the control key to the local position.
4. Push the View Set button and turn the Voltage potentiometer until the required load voltage is displayed. The view set mode stays active for approximately 3 seconds before the voltage display reverts to the output voltage mode.
5. Push the HV ON button. The load will charge to the preset voltage and once this voltage is reached the End of Charge LED will illuminate. The supply will maintain this voltage until the HV OFF button is pushed, or the load capacitor is discharged via the HV switch.

After the load has been discharged the external Inhibit function can be used to shut down the power supply output current which aids in the HV switch recovery. Application of an inhibit signal will typically shut down the output current in approximately 15microseconds.

To turn OFF the power supply depress the HV OFF button, or use the Inhibit input to shut off the output current but leave the supply in the HV ON condition. Opening the interlock terminals will also cause the power supply to turn off. In this case the unit can only be turned back on after the interlock has been closed and the HAV ON button depressed followed by the HV OFF button to RESET the fault. Any other fault occurring in the internal protection circuitry will interrupt the power supply's operation causing it to turn OFF. For a full explanation of each control and indicator refer to Section 5.

6.2. Remote Operation (All models)

All 402 models are easily controlled through the 25 pin sub D-type remote interface connector located on the rear panel. The minimum required signals for remote control operation are; HV ON/OFF, Vprogram and GND. The remaining signals are provided for status monitoring and fault diagnosis, or more sophisticated control methodologies. The function each signal is shown in Table 6, with a schematic showing a suggested remote interface circuit shown in Figure 9**Error! Reference source not found.**.

Pin	Signal Name	I/O	Description
1	Analog Out	O	0-10V (±1%) Analog of output voltage waveform. Impedance 1kΩ. If the 5V option is installed the voltage level is 0-5V.
3	Inhibit LED	O	Open collector through 100Ω. Low impedance when inhibit signal applied.
5	End of Charge LED	O	Open collector through 100Ω. Low impedance when power supply reaches End of Charge.
7	Inhibit Input	I	5-15V Inhibits unit, open or ground allows operation. Input impedance >10kΩ
8	HV ON/OFF	I	15V=On, ground or open =Off. Also used to reset latching faults by cycling from On to Off. Input impedance >1MΩ. If the EN option is installed 15V=Off, Ground or open = On
9	Peak output volts	O	0-10V (±1%) Peak detector of output voltage waveform. Can be used to drive a meter displaying peak charging voltage. Impedance 10k kΩ. If the 5V option is installed the voltage level is 0-5V.
10	HV ON LED	O	Open collector through 100□Ω. Low impedance when HV output is enabled.
12	GND		Control circuit return. Also chassis/earth ground.
13	Charge current	O	Uncalibrated Analog of output current waveform. Impedance 10kΩ
14	+15V	O	+15V through 100 kΩ
16	Overtemp LED	O	Open collector through 100Ω. Low impedance when inverter overtemperature condition occurs.
17	Interlock LED	O	Open collector through 100Ω. Low impedance when external interlock circuit is open.
18	Load fault LED	O	Open collector through 100Ω. Low impedance when load fault condition occurs. Load fault is normally a non-latching fault and will self reset after approximately 500ms (for models without LP option), unless caused by an output overvoltage where the supply will latch off.
19	Summary Fault LED	O	Open collector through 100Ω. Low impedance indicated a summary fault condition. Summary fault is a logical or of Overvoltage, Overtemp, AC Line, and Open Interlock conditions.
20	$\overline{\text{Inhibit Input}}$	I	0V Inhibits unit, 15V or open allows operation. Input impedance >10 kΩ
22	Vprogram	I	0-10V = 0-100% of rated output voltage. Input impedance >1MΩ. If the 5V option is installed the voltage level is 0-5V.
23	HV OFF LED	O	Open collector through 100Ω. Low impedance when HV output is off/disabled.
24	GND		Control circuit return. Also chassis/earth ground.

Table 6 402 Remote Interface Description

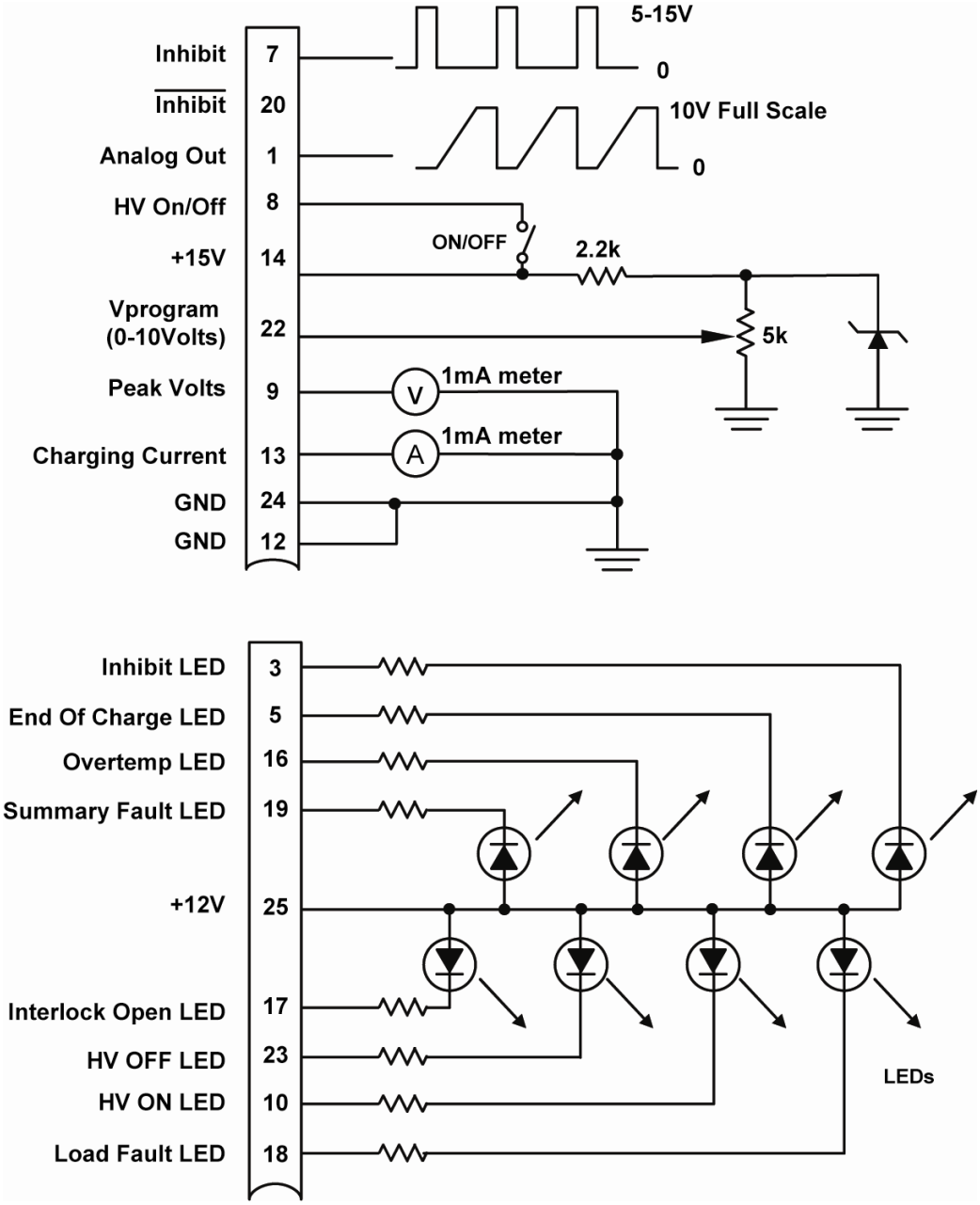

Figure 9 Suggested external remote interface circuit.

A detailed description of each remote control signal is given in the following sub-sections.

6.2.1. Analog Out

Pin 1. Analog of output voltage waveform as measured at the output terminals of the power supply. Signal is 0-10V +/-1% (0-5V if 5V option installed).

6.2.2. Inhibit LED

Pin 3. Open collector Active Low output indicating presence of an external Inhibit signal. Max rated voltage - 60V, 100Ω series resistance.

6.2.3. End Of Charge (EOC) LED

Pin 5. Open collector Active Low output indicating power supply output voltage has reached the programmed voltage or end of charge cycle. Max rated voltage - 60V, 100Ω series resistance.

6.2.4. Inhibit Input

Pin 7. 5-15V Inhibits unit (shuts off output current), open or ground allows operation. Input impedance >10kΩ. Signal can be used to aid load switch recovery.

6.2.5. HV ON/OFF

Pin 8. +15V = HV ON, ground or open = HV OFF. Also used to reset latching faults by cycling from ON to OFF. Input impedance > 1MΩ. If EN option is installed +15V = OFF, Open or Ground = ON.

6.2.6. Peak Output Volts

Pin 9. Peak detector of Analog output voltage waveform. Can be used to drive a meter displaying peak charging voltage. Signal is 0-10V +/-1% (0-5V if 5V option installed).

6.2.7. HV ON LED

Pin 10. Open collector Active Low output indicating power supply output is ON/Enabled. Max rated voltage - 60V, 100Ω series resistance. If both the HV ON and HV OFF signals are both active at the same time, this indicates a Summary Fault.

6.2.8. Ground

Pin 12. Control circuit return. Also chassis/earth ground.

6.2.9. Charge current

Pin 13. Analog of output current waveform. Signal is not calibrated.

6.2.10. +15V Output

Pin 14. +15V through 100Ω, maximum current is 20mA.

6.2.11. Overtemp LED

Pin 16. Open collector Active Low output indicating an inverter overtemperature condition has occurred. Once temperature has returned to normal levels this fault will clear, but the power supply will not restart without a Reset Cycle. Max rated voltage - 60V, 100Ω series resistance.

6.2.12. Interlock LED

Pin 17. Open collector Active Low output indicating the external interlock circuit is open. Max rated voltage - 60V, 100Ω series resistance.

6.2.13. Load Fault LED

Pin 18. Open collector Active Low output indicating a load fault condition. Load fault is a non-latching fault and will self reset after approximately 500ms (for models without LP option). Load fault is caused by an output overvoltage condition (110% of rated voltage) or an output short circuit/large capacitor (load charges for 500ms without reaching programmed voltage). Max rated voltage - 60V, 100Ω series resistance.

6.2.14. Summary Fault LED

Pin 19. Open collector Active Low output indicating a summary fault condition. Summary fault is a logical OR of Overvoltage, Overtemp, AC Line, and Open Interlock conditions. Summary Fault is also indicated by both HV ON and HV OFF LEDs/indicators illuminating at the same time. Max rated voltage - 60V, 100Ω series resistance.

6.2.15. Not Inhibit Input

Pin 20. Logical Inverse of Inhibit input (Pin 7), 0V Inhibits unit, 15V or open allows operation. User should control supply with either the Inhibit or Not Inhibit signal, both signals should not be used together. Input impedance >10kΩ.

6.2.16. Vprogram

Pin 22. 0-10V Analog Input = 0-100% of rated output voltage (0-5V if 5V option is installed). Input impedance >1MΩ.

6.2.17. HV Off LED

Pin 23. Open collector Active Low output indicating HV output is off/disabled. Max rated voltage - 60V, 100Ω series resistance.

6.2.18. Ground

Pin 24. Control circuit return. Also chassis/earth ground.

6.3. Remote Control Sequence

Note

The logic levels in the description below are for a supply without EN option. If EN is installed the logic levels for HV ON/OFF should be reversed.

Before operating either a 402L, S, or OEM in remote mode it must first be connected to a master supply, or an appropriate external control system. To operate a model 402L in remote mode the front panel keyswitch must be in the REMOTE position.

It is suggested that the INHIBIT signal is used in addition HV ON/OFF signal to control the output current of the power supply during the normal charge/discharge cycle. The INHIBIT signal should be asserted (Pin 7=5-15V) prior to activating the HV ON signal.

Once HV ON has been set (Pin 8=15V), then INHIBIT can be removed (Pin 7=0V), and the supply will begin charging the load. A few tens of microseconds before the load switch is triggered to close, the INHIBIT signal should be asserted to turn-off the output current, and aid in switch recovery.

After the load is discharged, and the HV switch has recovered to an insulating state, INHIBIT can be removed and the load re-charged. A typical set of remote control waveforms illustrating this sequence is shown in Figure 10.

There is no need to turn HV ON and OFF during the normal charge discharge cycle, just use the INHIBIT signal to control the power supply. HV should be turned off (Pin 8=0V) as soon as the load circuit is no longer required to operate.

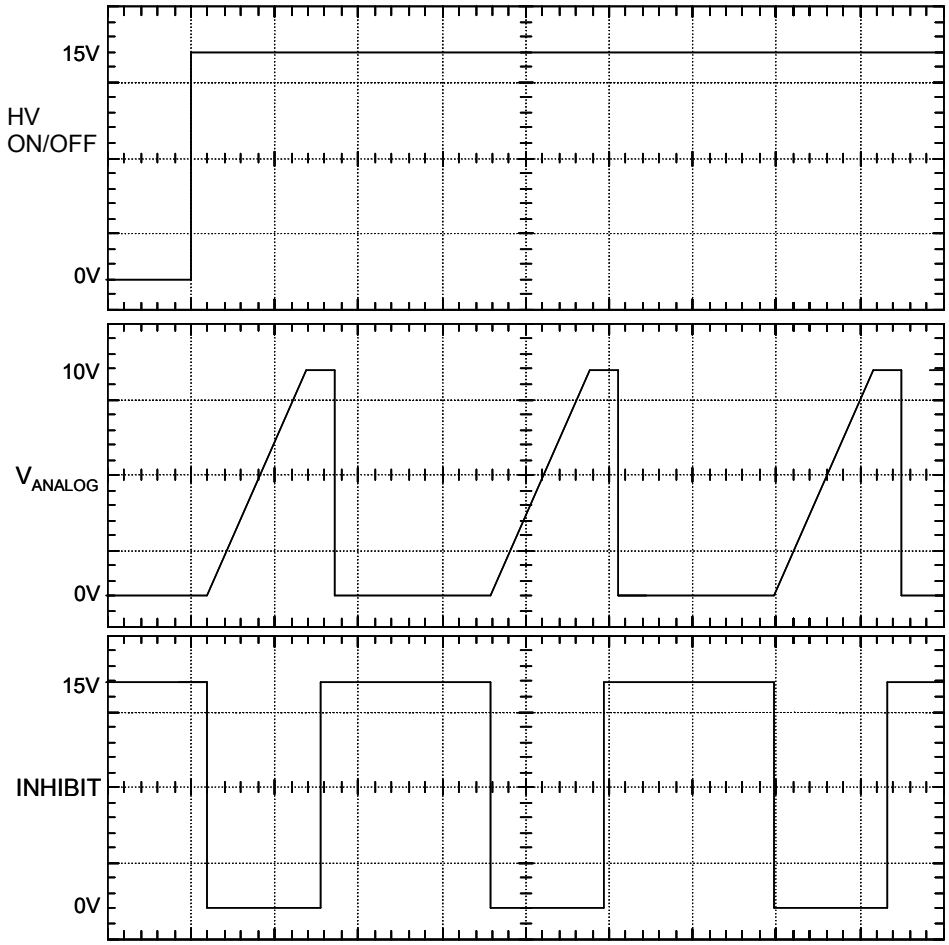

Figure 10 Typical remote Interface waveforms

The 402 supply can also be controlled without using the Inhibit signal (leaving Pin 7or 20 unconnected), and in this case the output current is immediately turned ON when the HV ON signal is activated assuming there are no faults present.

6.4. Parallel Operation

The 402 series capacitor charging power supplies are constant current sources, and can simply be connected in parallel for applications requiring increased power. Parallel supplies should have the same output voltage rating and programming options (if one unit has the 5V option, all others in parallel must have this option). Note that it is also possible to operate power supplies in parallel from different series (ie a model 402 in parallel with a model 802), but the user has to ensure the remote interface connections are compatible.

To operate more than one unit in parallel all that is required is a parallel control cable, and to connect the HV output cables together at the load. The output currents from the parallel supplies simply add together to increase the overall system current. Any model 402 supply, or any combination of units can be operated in parallel. If at least one model 402L is connected in a parallel system then the system can be operated without an external controller by using the 402L as a master supply in local mode.

If status, voltage, and current displays/measurements are required individually for each supply in a parallel system then the ‘daisy chain’ control cable is not appropriate, and each unit must be individually connected to a remote control system.

6.4.1. Parallel system comprising 402L supplies

If all of the parallel units are L model supplies then one unit should be operated as the master supply in either local or remote mode. The other parallel supplies can be connected to the SLAVE 25-pin D-sub connector on the master unit rear panel (refer to Figure 11). The SLAVE control cable can be a pin-to-pin ribbon or other cable that is ‘daisy chained’ to the REMOTE connector on each of the SLAVE supplies. Note: The master 402L supply in a parallel system only displays the status, voltage, and current output for that unit, not for the entire system. The slave supplies will also display the voltage and current only for that specific unit.

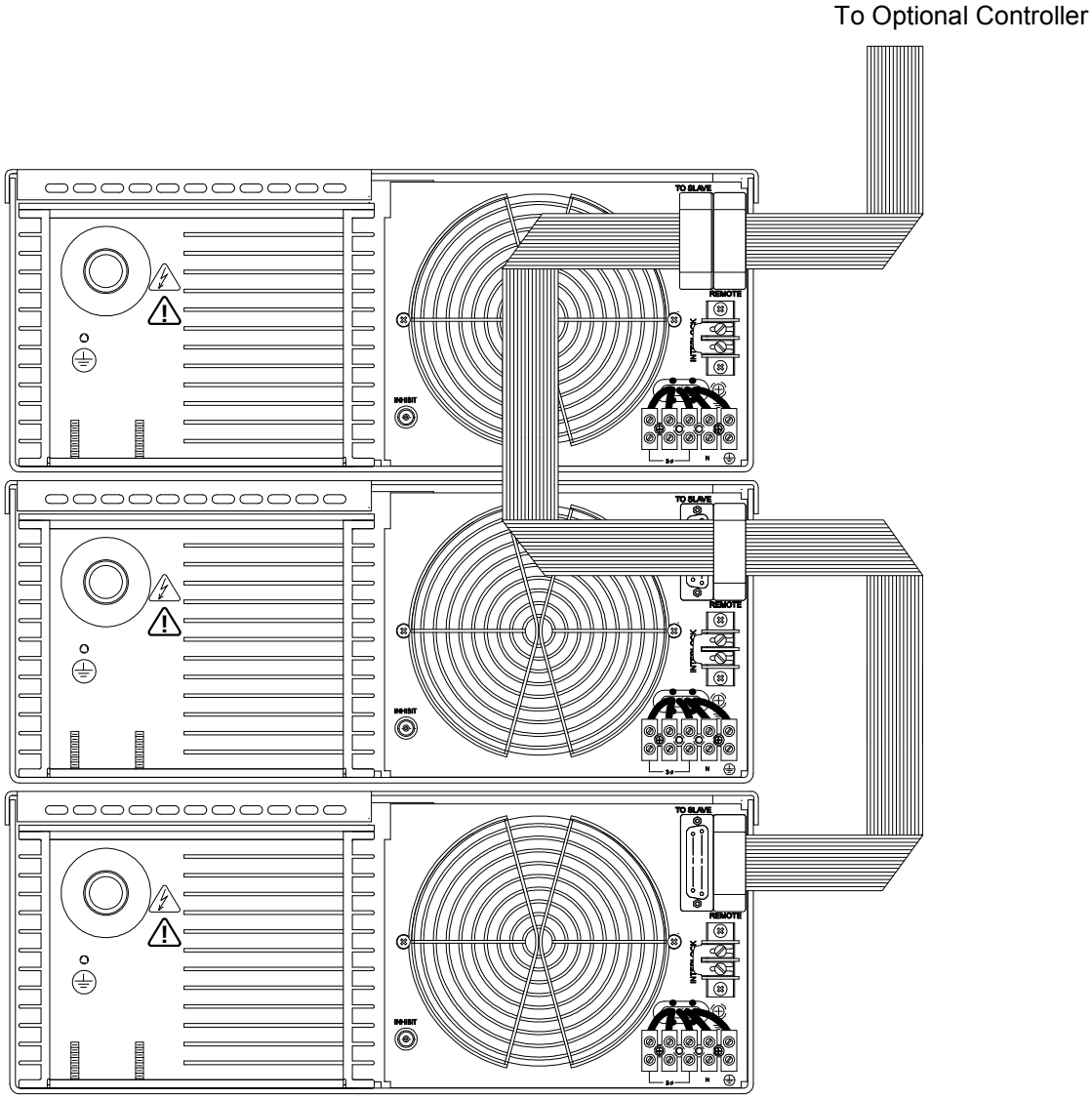

Figure 11 402L Parallel System Control Connections.

6.4.2. Parallel system comprising both 402L and 402S or OEM supplies

For a system comprising both 402L and S/OEM units, a single L model should be operated as a master in either local or remote mode. The other parallel supplies can be connected to the SLAVE 25-pin D-sub connector on the master unit rear panel (refer to Figure 12). The SLAVE control cable can be a pin-to-pin ribbon or other cable that is ‘daisy chained’ to the REMOTE connector on each of the SLAVE supplies.

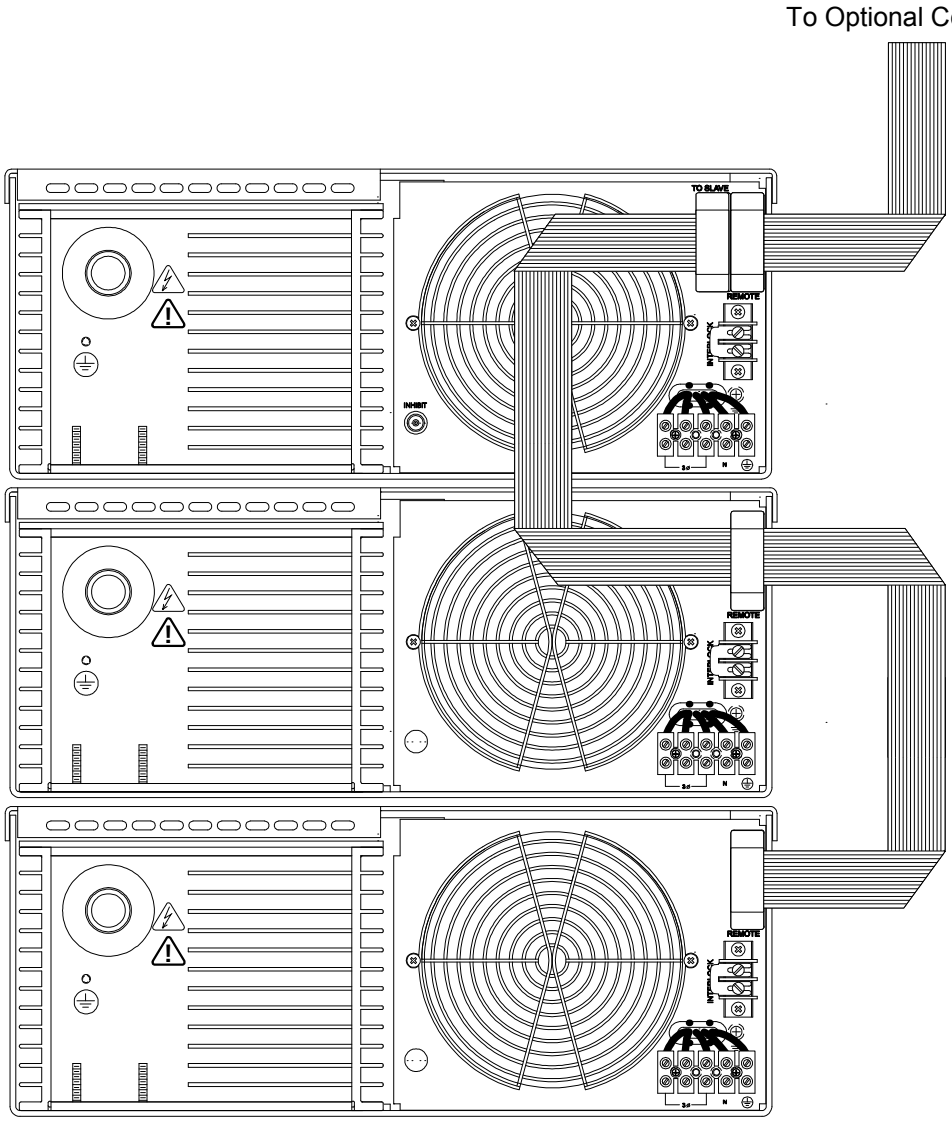

Figure 12 402L and 402S/OEM Parallel System control Connections.

6.4.3. Parallel system comprising 402S/OEM supplies

A system comprising only model 402S/OEM supplies must be operated from an external control system. The control system should be connected using a pin-to-pin ribbon or other cable that is ‘daisy chained’ to the REMOTE connector on each of the 402S/OEM supplies in the system. A sketch is shown in Figure 13.

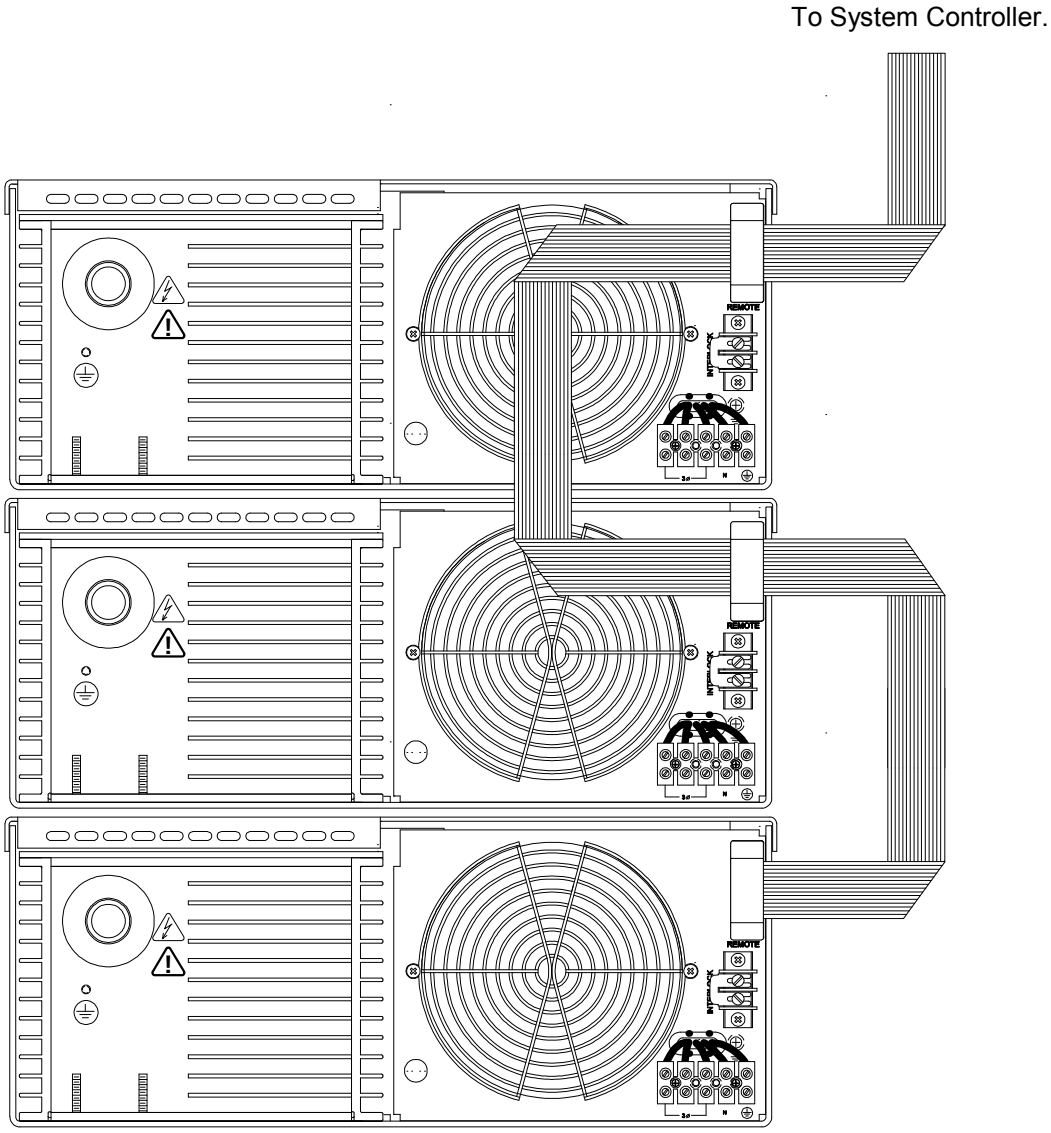

Figure 13 Parallel Operation Connections for 402S/OEM Supplies

Notes

7. APPLICATION NOTES

The 402 series power supplies are high voltage power sources and great care should be taken when connecting and operating these units. In order to aid installation and system design, a number of application notes have been produced to support the design engineer with certain load circuit component rating and selection. The latest versions of these application notes are available for download at the TDK-Lambda High Power web site (http://www.us.tdk-lambda.com/hp/product_html/high_volt.htm).

The following App Notes were available at the time this manual was produced. These documents are continually being improved and expanded, so always check for the latest revision on-line.

APP Note 500: Calculating Capacitor Charge Time

APP Note 502: Calculating AC Line Currents

APP Note 505: Charging units as Continuous Output DC Supplies

APP Note 507: Charging Large Load Capacitors

APP Note 509: What is Regulation and Repeatability?

APP Note 513: Power Factor Correction

APP Note 517: Protection Against Voltage Reversal

If there are any other application issues or questions that are not covered in these Application Notes, or elsewhere in this manual, please do not hesitate to contact the factory and our team of experienced HV application engineers.

Contact the Factory – We are here to help!

Tel: +1 732 922 9300 x229

Fax: +1 732 922 1441

THIS IS A COMPUTER GENERATED DWG.
NO MANUAL REVISIONS ARE PERMITTED.

APPLICATION			LTR	E.C.O. NO.	BY	APP.
USED ON	NEXT ASSY.	QTY.	00	INITIAL RELEASE 7/6/94	SAdB	
			A	TG 3 REL. 10/18/95	CJS	

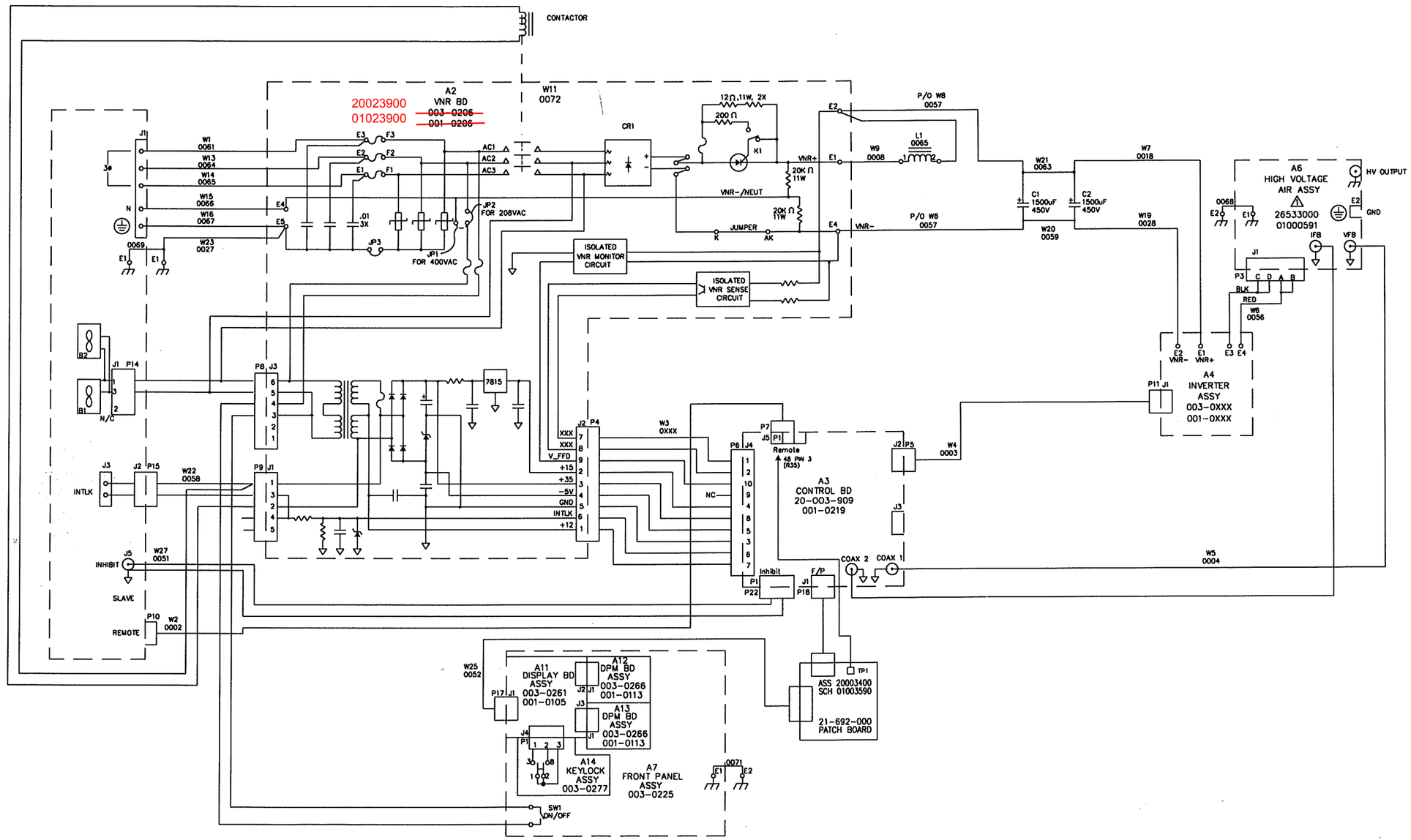

REFERENCE DESIGNATIONS	
HIGHEST	NOT USED
S1	
M1	
C2	
L2	
A14	A8
P22	
W27	W12,17,18,24
E2	

SHEET ___ OF ___

ELECTRONIC MEASUREMENTS, INC.

TITLE: SCHEMATIC
402L 208V AC 1064

DWG NO. 01-487-002 REV. A

SCALE: NONE

P/L: 487

DRAWN: SAdB 7/26/94

THIS IS A COMPUTER GENERATED DWG.
NO MANUAL REVISIONS ARE PERMITTED.

APPLICATION			LTR	E.C.O. NO.		BY	APP.
USED ON	NEXT ASSY.	QTY.	00	REL.ECO# 320	4/91	JT	
402-OEM LV AC	003-0273		01	ECO# 378	5/91	JT	
			A	TG 3 REL	12/15/94	CJS	
			B	ECO #16288	6/23/97	CJS	

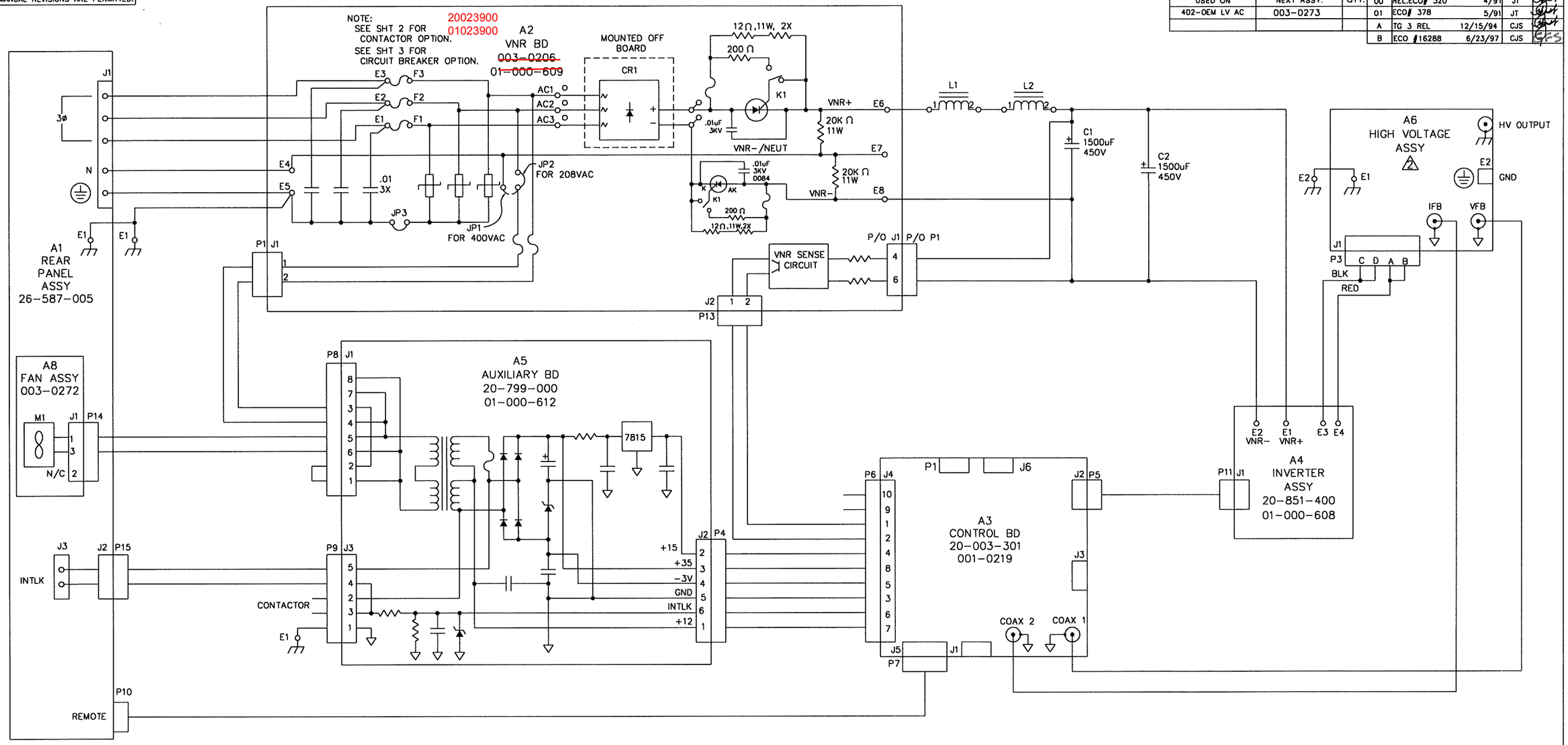

NOTES:

1. WIRES W1,13, AND 14 ARE NOT USED ON OPTION 2 ONLY. WIRE W11 IS USED ONLY ON OPTION 1 AND 2.

2. SEE FAMILY TREE (004-0018).

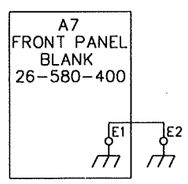

REFERENCE DESIGNATIONS	
HIGHEST	NOT USED
S1	
M1	
C2	
L2	
A8	
P16	P2
W23	W1,11-14,17,18
E2	

SHEET 1 OF 3

MTL: N/A	TOL: .X = ± .02" .XX = ± .01" .XXX = ± .005" FRAC. = ± 1/64" ANGLES = ± 1/2°	REL. TO MFG. DWN. DATE: 12/15/94 MFG. DATE: 12/15/94	ENG. CTL. DWN. J TURCOTTE DATE: 7/90 CHK. B.WEAVER DATE: 10/90	ELECTRONIC MEASUREMENTS, INC.
FIN: N/A	P/L: 487 SCALE: N/A	DOC. REL. DATE: 12/15/94 DO NOT SCALE DWG.	APP. DATE: 12/15/94	TITLE: SCHEMATIC 402-OEM 200V AC SYSTEM DWG. NO. 01-487-003 REV. B

THIS IS A COMPUTER GENERATED DWG.
NO MANUAL REVISIONS ARE PERMITTED.

APPLICATION			LTR	E.C.O. NO.	BY	APP.
USED ON	NEXT ASSY.	QTY.		SEE SHEET 1		

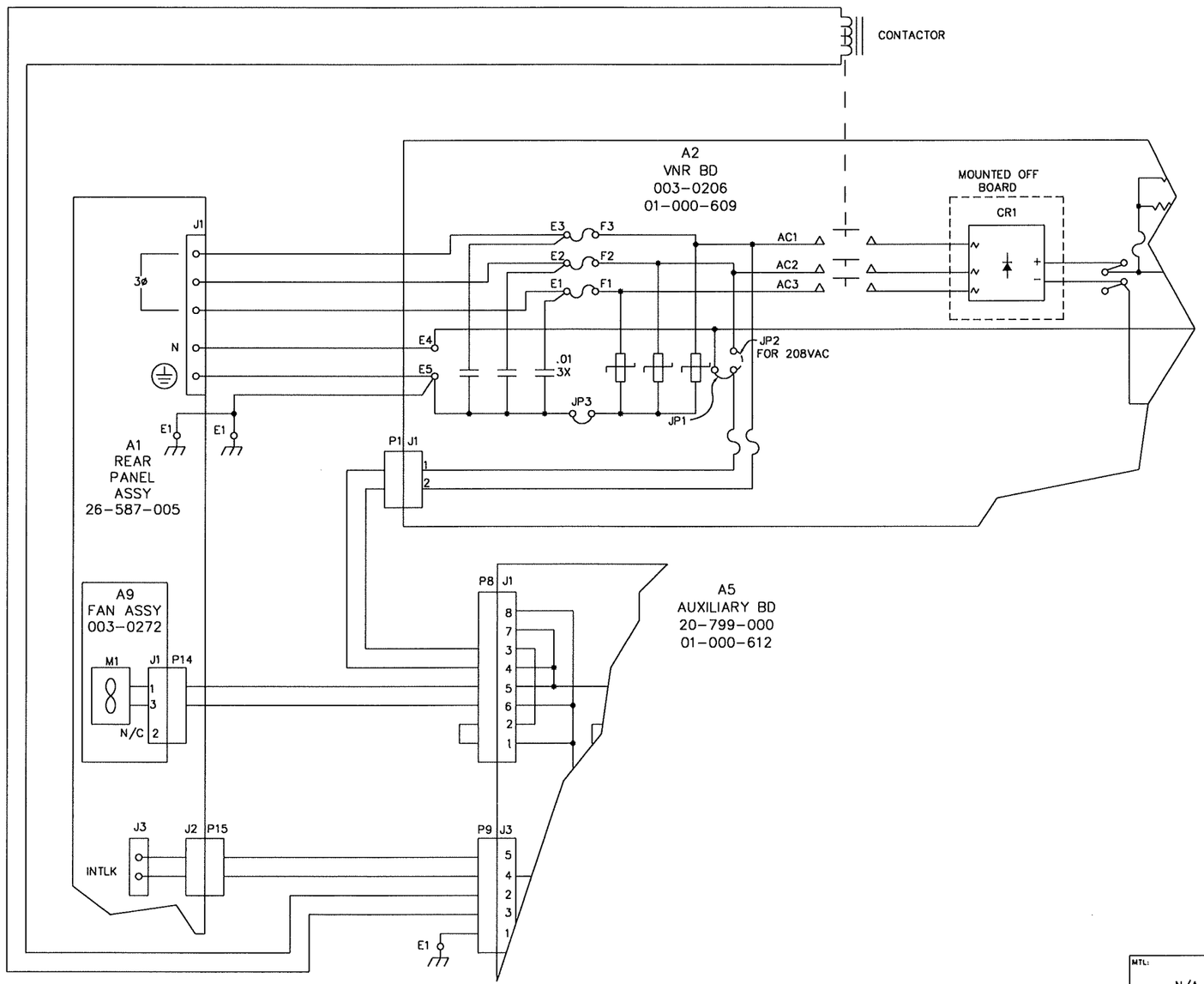

OPTION 1

402 OEM VERSION WITH CONTACTOR

SHEET 2 OF 3

MTL: N/A	TOL: .X = ± .02" .XX = ± .01" .XXX = ± .005" FRAC. = ± 1/64" ANGLES = ± 1/2°	REL. TO MFG. PRJ. ENG. DATE:	ENG. CTL. DWN. DATE: J TURCOTTE 7/90	ELECTRONIC MEASUREMENTS, INC.	
		MFG: DATE:	CHK: DATE:	TITLE: SCHEMATIC 402-OEM 200V AC SYSTEM	
FIN: N/A	P/L: 487	DOC. REL. DATE:	ENG: DATE:		
	SCALE: N/A	DO NOT SCALE DWG.	APP. DATE:	DWG. NO. 01-487-003	REV. B

THIS IS A COMPUTER GENERATED DWG.
NO MANUAL REVISIONS ARE PERMITTED.

APPLICATION			LTR	E.C.O. NO.	BY	APP.
USED ON	NEXT ASSY.	QTY.		SEE SHEET 1		

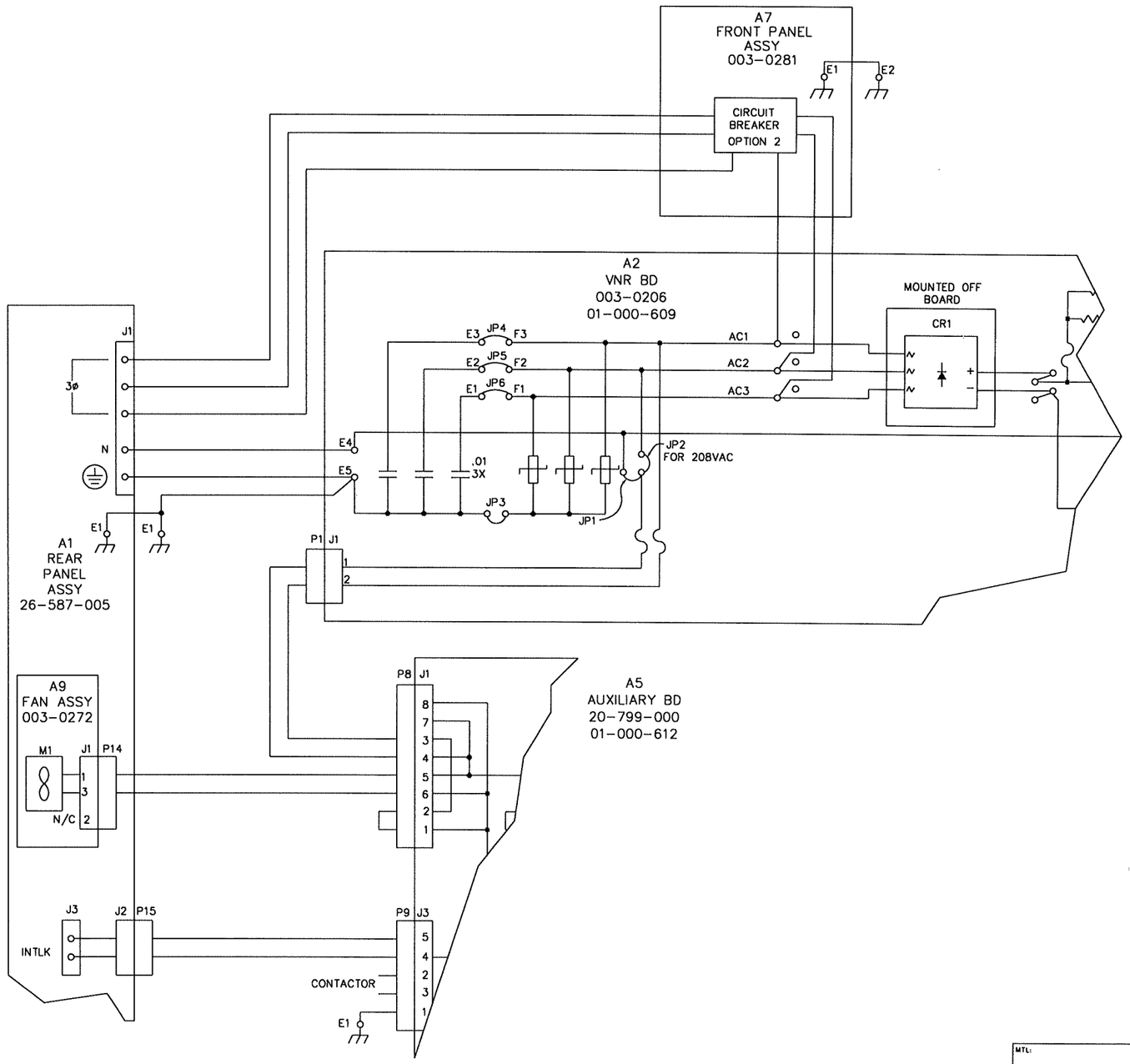

OPTION 2

402 OEM VERSION WITH CIRCUIT BREAKER
AND WITHOUT FUSES.

SHEET 3 OF 3

MTL: N/A	TOL: .X = ± .02" .XX = ± .01" .XXX = ± .005" FRAC. = ± 1/64" ANGLES = ± 1/2°	REL. TO MFG. PRJ. ENG. DATE:	ENG. CTL. DWN: B. WEAVER DATE: 12/90	ELECTRONIC MEASUREMENTS, INC.
		MFG: DATE:	CHK: DATE:	TITLE: SCHEMATIC 402-OEM 200VAC SYSTEM
FIN: N/A	P/L: 487	DOC. REL. DATE:	ENG: DATE:	
	SCALE: N/A	DO NOT SCALE DWG.	APP: DATE:	DWG. NO. 01-487-003 REV. B

THIS IS A COMPUTER GENERATED DWG.
NO MANUAL REVISIONS ARE PERMITTED.

APPLICATION			LTR	E.C.O. NO.	BY	APP.
USED ON	NEXT ASSY.	QTY.	1	INITIAL REL. 7/13/95	CH	
402-OEM LV AC	003-0273		A	TG 3 REL. 3/12/96	CJS	

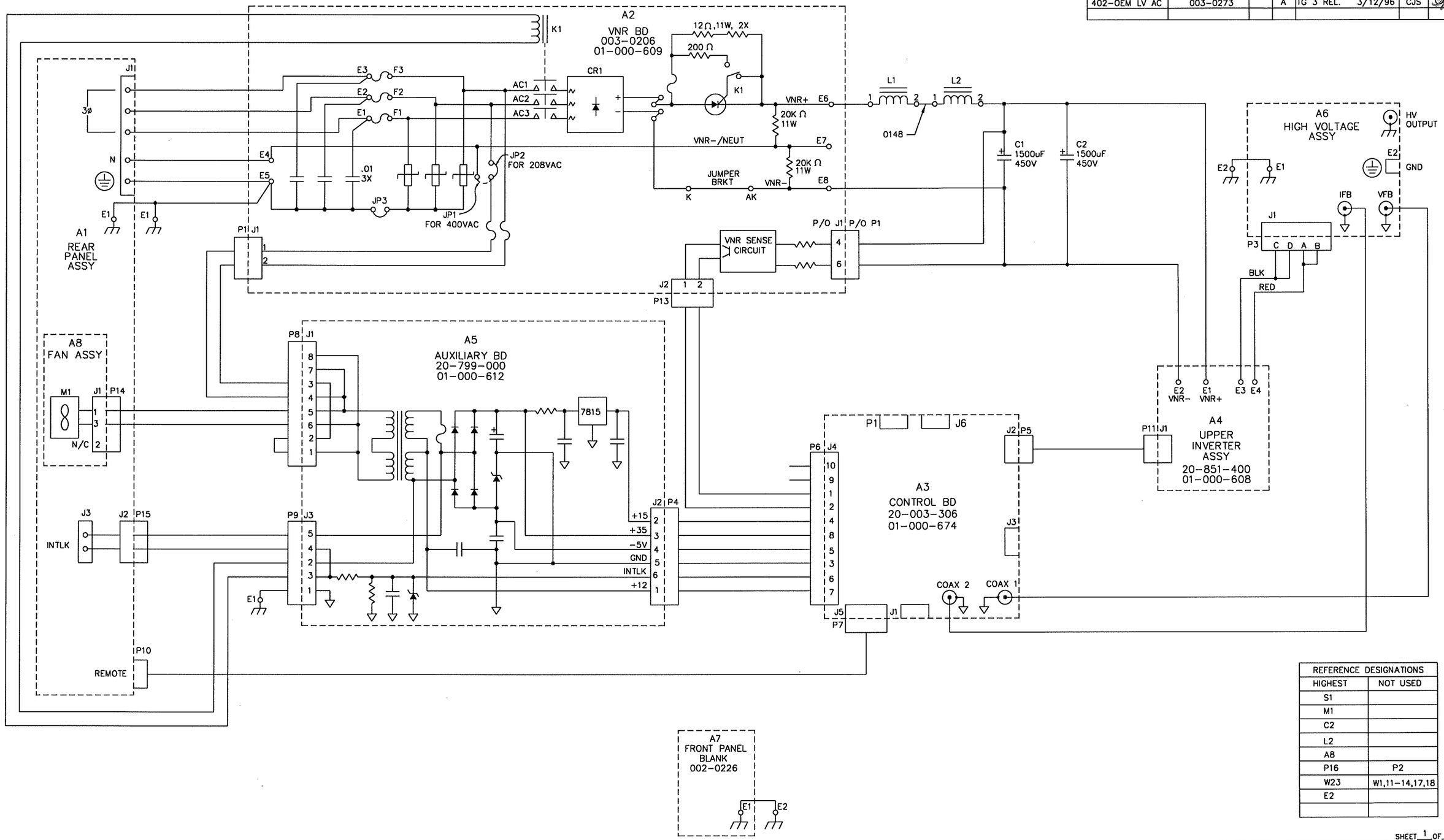

REFERENCE DESIGNATIONS	
HIGHEST	NOT USED
S1	
M1	
C2	
L2	
A8	
P16	P2
W23	W1,11-14,17,18
E2	

SHEET 1 OF 1

MTL: N/A	TOL: .X = ± .02" .XX = ± .01" .XXX = ± .005" FRAC. = ± 1/64 ANGLES = ± 1/2°	REL. TO MFG. PRJ. ENG. DATE: MFG. DATE:	ENG. CTL. DWN: C.SEIBERT DATE: 3/12/96 CHK. DATE: 8/13/95	ELECTRONIC MEASUREMENTS, INC.
FIN: N/A	P/L: 487 SCALE: NONE	DOC. REL. DATE: DO NOT SCALE DWG.	ENG. DATE: 8/13/95 APP. DATE: 8/13/95	TITLE: SCHEMATIC 402-OEM-DC 208V AC SYSTEM-1151 DWG. NO. 01-487-008 REV. A

THIS IS A COMPUTER GENERATED DWG.
NO MANUAL REVISIONS ARE PERMITTED.

APPLICATION			LTR	E.C.O. NO.		BY	APP.
USED ON	NEXT ASSY.	QTY.	1	INITIAL REL.	2/3/96	SE	
FINAL	802 L	REF.	A	TO 3 REL.	3/15/96	CJS	
			B	ECO #16286	6/11/97	CJS	

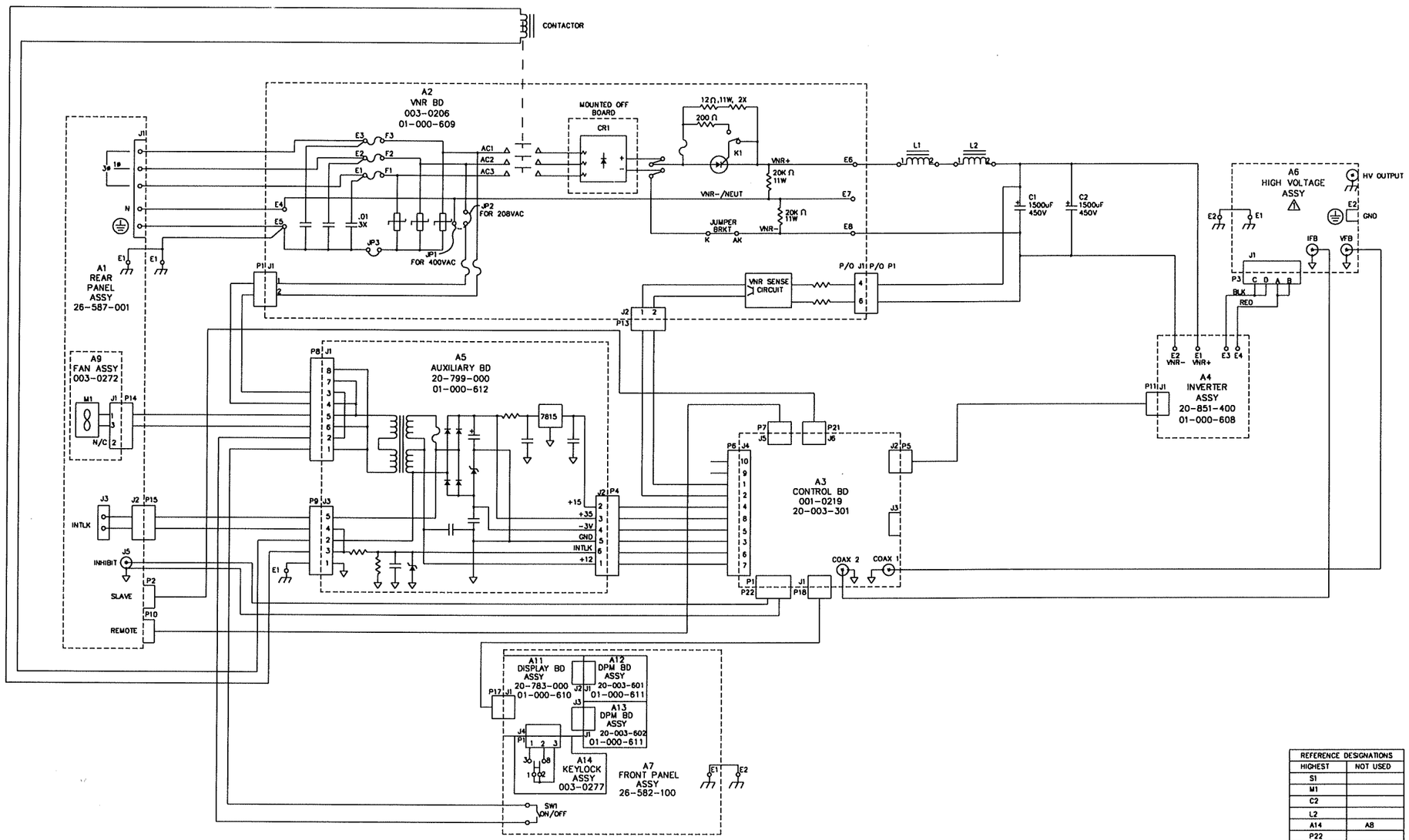

REFERENCE DESIGNATIONS	
HIGHEST	NOT USED
S1	
M1	
C2	
L2	
A14	A8
P22	
E2	

SHEET 1 OF 1

MTL: N/A	TOL: X = ±.03" XX = ±.01" XXX = ±.005" FRAC. = ±1/64" ANGLES = ±1/2°	REL. TO MFG. DWN. DATE. 3/15/96	ENG. CTL. DWN. C.SCHERT DATE. 3/15/96	ELECTRONIC MEASUREMENTS, INC.
FIN: N/A	P.N.: 487 SCALE: NONE	CHK. DATE. 3/15/96 DO NOT SCALE DWG.	CHK. DATE. 3/15/96 APV. DATE. 3/15/96	TITLE: SCHEMATIC 402L 208V AC SYS DWG. NO. 01-487-009 REV. B

THIS IS A COMPUTER GENERATED DWG.
NO MANUAL REVISIONS ARE PERMITTED.

APPLICATION			LTR	E.C.O. NO.	BY	APP.
USED ON	NEXT ASSY.	QTY.	1	INIT REL 5/97	BH	
402L	003-0351		A	TC REL 7/11/97	CJS	

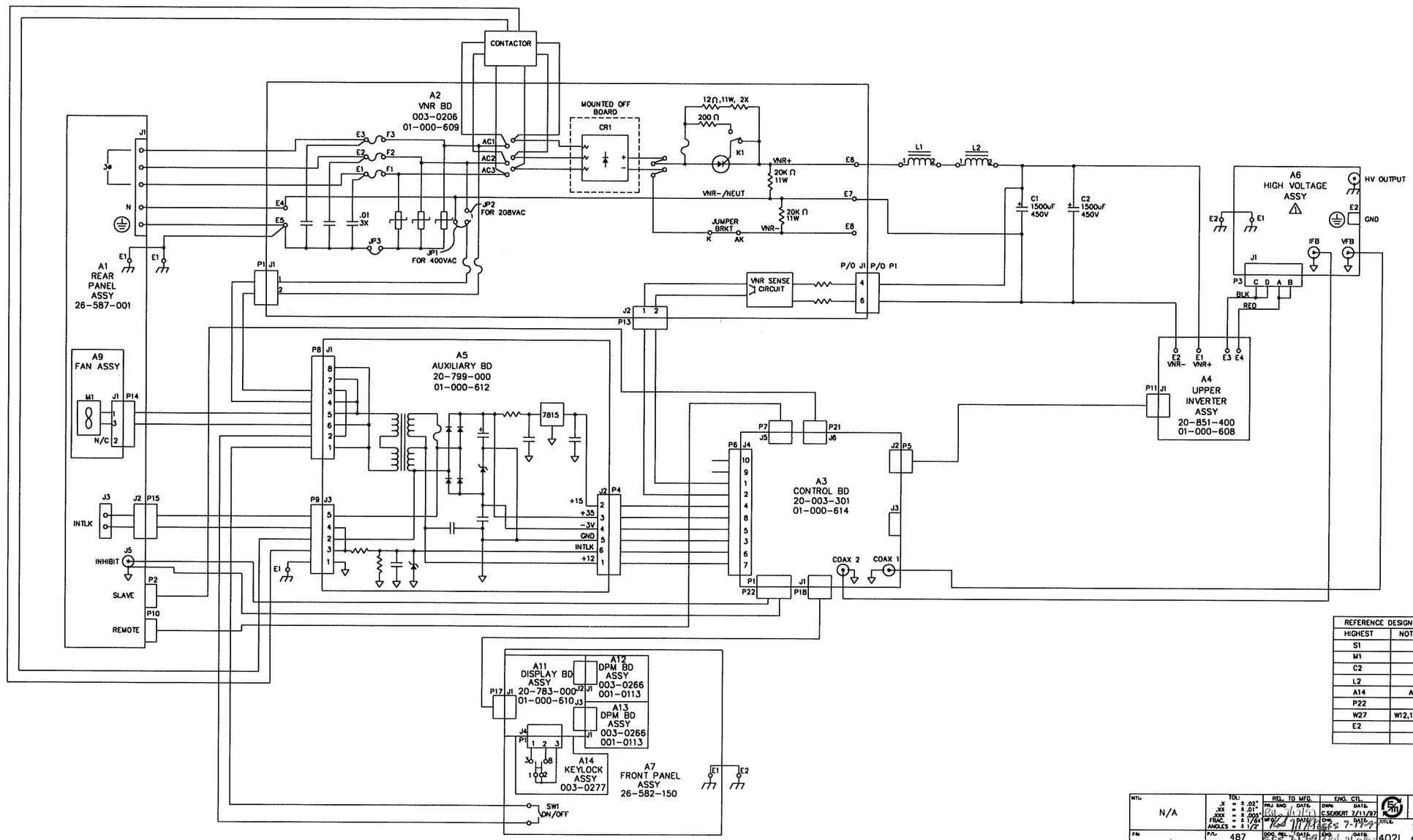

REFERENCE DESIGNATIONS	
HIGHEST	NOT USED
S1	
M1	
C2	
L2	
A14	A8
P22	
W27	W12,17,18,24
E2	

SHEET 1 OF 1

MTL. N/A	TOL: X = ± .02" XX = ± .01" XXX = ± .005" FRAC. = ± 1/64 ANGLES = ± 1/2°	REL. TO MFG. PRJ. ENG. DATE	ENG. CTL. DWN. DATE C.SEGERT 7/11/97	ELECTRONIC MEASUREMENTS, INC.
FIN. N/A	P/L 487	DOC. REL. DATE	APP. DATE	TITLE SCHEMATIC 402L 400VAC SYSTEM
	SCALE N/A	DO NOT SCALE DWG.	APP. DATE	DWG. NO. 01-487-013 REV. A

THIS IS A COMPUTER GENERATED DWG.
NO MANUAL REVISIONS ARE PERMITTED.

APPLICATION			LTR	E.C.O. NO.	BY	APP.
USED ON	NEXT ASSY.	QTY.	06	REVISED PER ECO# 424 8/91	JT	
CONTROL BD.	102, 152, 402, 802		07	ENGINEERING CHANGE 7/95	AK	
			A	ECO 16090 04/30/02	RFC	
			B	ECO 22352 09-27-06	KHL	

NC→J1-1 NC→J1-2 NC→J1-7 NC→J1-11 NC→J1-13 NC→J1-14 NC→J1-26
NC→J2-3 NC→J3-6 NC→J2-9
NC→J3-3 NC→J3-6 NC→J9-9
NC→J5-3 NC→J5-4 NC→J5-7 NC→J5-16 NC→J5-21 NC→J5-26
NC→J6-1 NC→J6-2 NC→J6-3 NC→J6-4 NC→J6-7 NC→J6-16
NC→J6-17 NC→J6-21 NC→J6-24 NC→J6-25 NC→J6-26

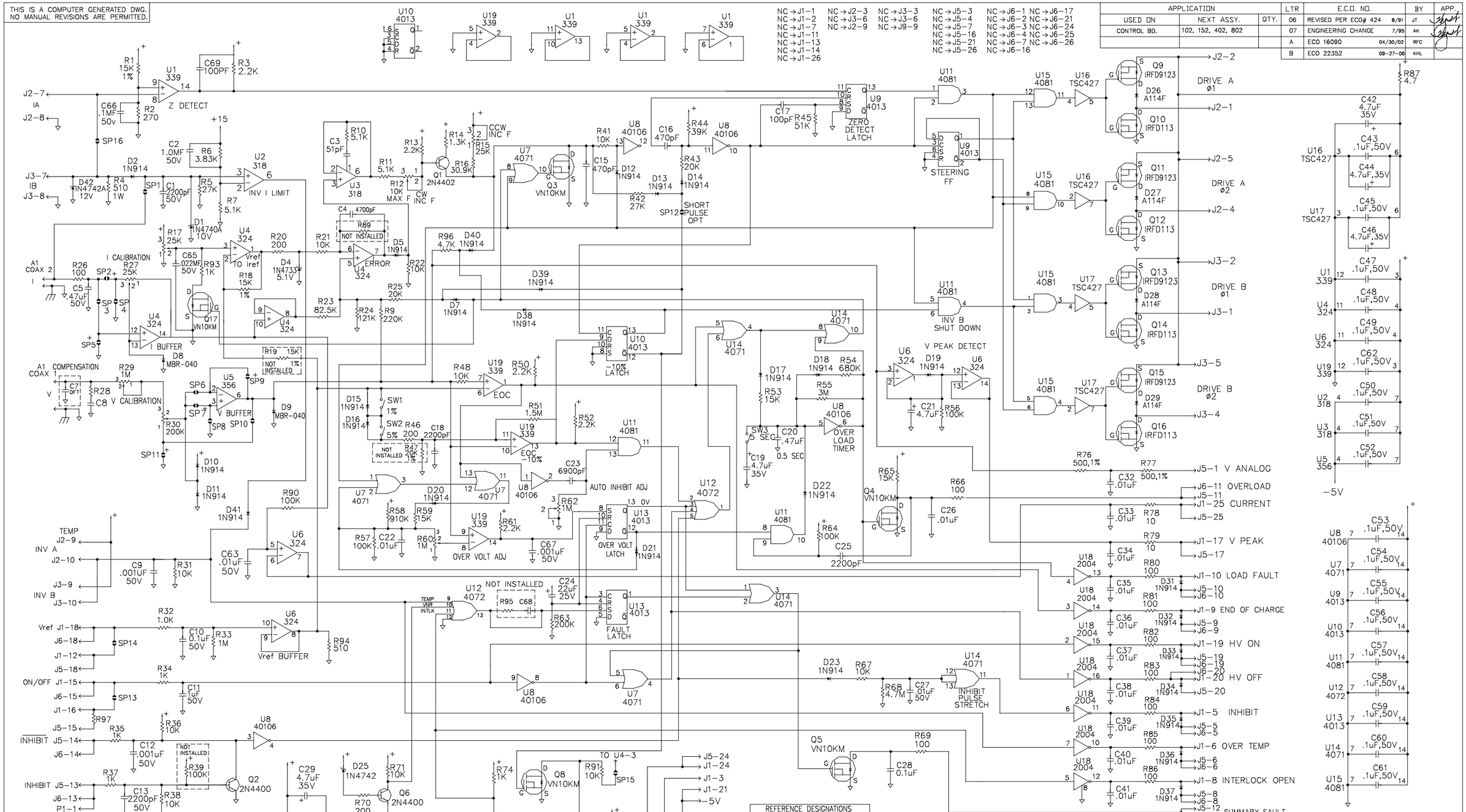

REFERENCE DESIGNATIONS	
HIGHEST	NOT USED
C69	
COAX2	
D42	
J6	
P1	
Q17	
R96	R92,94
SP15	
SW3	
U19	

NOTE: REF. DES. NOT POPULATED ARE C8,64,68;D3,30;R8,9,47,49,88,95.

AUTOCAD DRAWING.
THIS IS A STANDARD FORMAT.
NOT ALL BOXES APPLY TO EVERY
DRAWING AND MAY NOT BE FILLED IN.

SHEET 1 OF 1

MTL: N/A	TOL: .X = ± .02" .XX = ± .01" .XXX = ± .005" FRAC. = ± 1/64" ANGLES = ± 1/2°	REL. TO MFG. PRJ. ENG. DATE: MFG: DATE: DOC. REL. DATE:	ENG. CTL. DWN: AMGAD 7/13/95 CHK: 7/13/95 APP: 7/13/95
FIN:	P/L: SCALE:	DO NOT SCALE DWG.	

LAMBDA EMI

TITLE: SCHEMATIC CONTROL BD

DWG. NO. 001-0219 REV. B

a.l.e. systems

802 Series Data Sheet

High Voltage Power Supply
Capacitor Charging and DC
Output Voltage from 1kV - 50kV
Output Power 8kJ/sec or 8kW
Full local and remote control

TDK·Lambda

www.us.tdk-lambda.com/hp

802 Series Specification

Industry standard rack mount capacitor charging and DC power supplies with 8kJ/sec rating for capacitor charging, or 8kW rating in continuous DC applications.

- **Power rating of 8kJ/sec, 9kJ/sec peak**
- **Output Voltages from 0-1kV to 0-50kV**
- **Compact air cooled rack mount package**
- **Efficient IGBT based resonant inverter**
- **Excellent pulse to pulse repeatability**
- **208 or 400VAC 3Ø input voltage**
- **Comprehensive remote control interface**
- **UL Approved AC line contactor (optional for OEM models)**
- **Ultra reliable and rugged industry standard design**
- **Passive PFC (pf = 0.85)**
- **Full local output voltage and HV On/Off controls (L version)**
- **Simple parallel operation for higher power**
- **Lab, Slave, or OEM front panel options**

Average Capacitor Charging Power	8,000 Joules/sec ($\frac{1}{2}CV^2$ x Rep Rate)
Peak Capacitor Charging Power	9,000 Joules/sec ($\frac{1}{2}CV^2/t_{charge}$)
Average Continuous DC Power	8,000 Watts
Output Voltage Range	1, 2, 4, 5, 10, 15, 20, 30, 40, 50kV, variable from 10-100% of rated
Polarity	Available as fixed Positive or Negative. Please specify at time of ordering
HV Output Cable	1-39kV Models - DS2124 Coaxial cable with proprietary HV connector
	40-50kV Models - DS2214 Coaxial cable with proprietary HV connector
HV Insulating Medium	Exxon Mobil Univolt N61B or equivalent insulating oil
AC Input Voltage	208VAC (180-264), 3Ø or 400VAC (340-460), 3Ø + N, specify at time of ordering
AC Input Current	40A/25A
AC Connector	UL/CSA approved terminal block. 3Ø + ⏚ for 208VAC, 3Ø + N + ⏚ for 400VAC
AC Line Contactor	UL/CSA approved AC line contactor (standard on 802L and 802S, option for 802OEM)
Power Factor	Passive PFC pf = 0.85 at full load and nominal AC line
Efficiency	Better than 85% at full load
Front Panel	802L - Voltage Control, Voltage & Current Meters, Status Indicators
	802S - On/Off Switch, Status Indicators
	802-OEM - Blank front panel
Stability	0.2% per hour after 1 hour warmup
Temperature Coefficient	100ppm per °C typical
Stored Energy	Less than 0.3J all models
Pulse to Pulse Repeatability	±2% to 1000Hz, consult factory for higher rep rates
Dimensions - inches (mm)	19 (483) W x 8.72 (222) H x 17 (432) D
Weight - lbs (kg)	80 (37)
Ambient Temperature	Storage: -40 to +85°C. Operating: -20 to +45°C
Altitude	Storage: 40,000ft (12,000m), Operating: 9,900ft (3,000m)
Humidity	10-90%, non-condensing
Protection	Open/short circuits, Overloads, Arcs, Overtemp, Overvoltage, Safety Interlock
Remote Control (all models)	Via 25-pin D-sub connector on rear of unit, Signals include, Vprogram (0-10V), HV Enable/Reset, Inhibit, Summary Fault, Load Fault, Vanalog, Vpeak
Accessories	10ft HV cable, operating manual
Options	EN - Low Enable. Replaces standard high enable
	5V - 0-5V Analog programming. Replaces standard 0-10V programming.
	LP - Latching Overload Protection, requires HV reset after overload fault
	DC - Continuous DC operation
	CT - AC line contactor (option for 802OEM models only, standard on 802L and 802S)
	Double terminated HV cable, and mating bulkhead connector
Ordering Info	Model - XXkV - POS (or NEG) - YYYVAC - ZZ (options)
Ordering Examples	802L-10kV-POS, 802S-1kV-NEG-DC, 802-OEM-50kV-POS-400VAC
All specifications subject to change without notice	

802 Series Mechanical Details

802L Front View

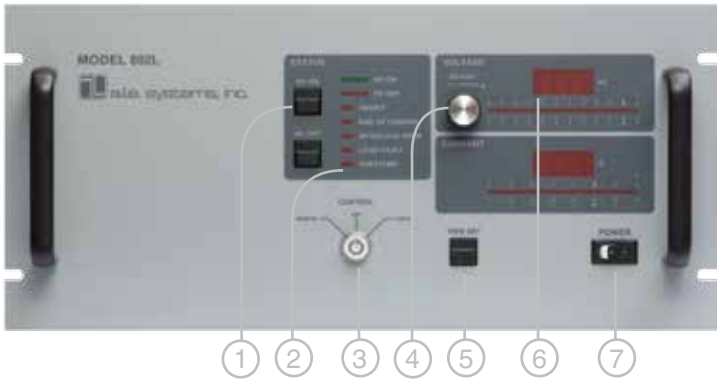

802L Rear View

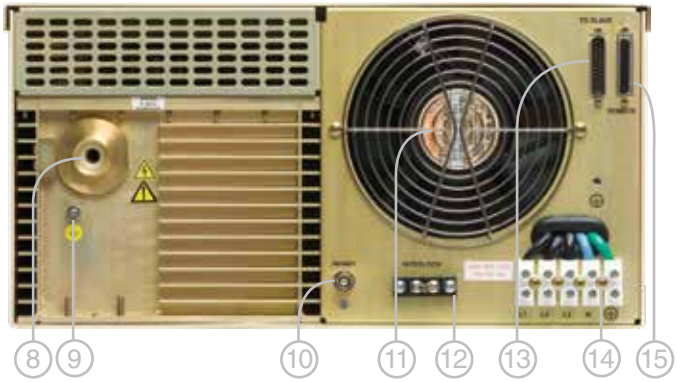

1 - HV On/Off Push Buttons (L model only)
2 - Status Indicator LEDs (L and S models only)
3 - Local/Remote Keyswitch (L model only)
4 - 10-Turn HV Output Control (L models only)
5 - View Set Push Button (L models only)
6 - Output Voltage and Current Displays (L models only)
7 - Power Switch (L and S models only)

8 - HV Output Connector
9 - Ground Stud
10 - Inhibit BNC (L models only)
11 - Cooling Fan
12 - Interlock Terminals (L and S models only)
13 - Slave Supply Programming Connector (L models only)
14 - AC Input Terminal Block
15 - Remote Programming Connector

Outline Drawings

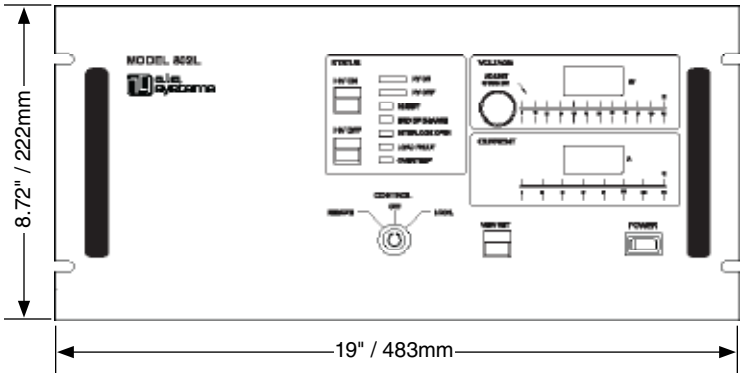

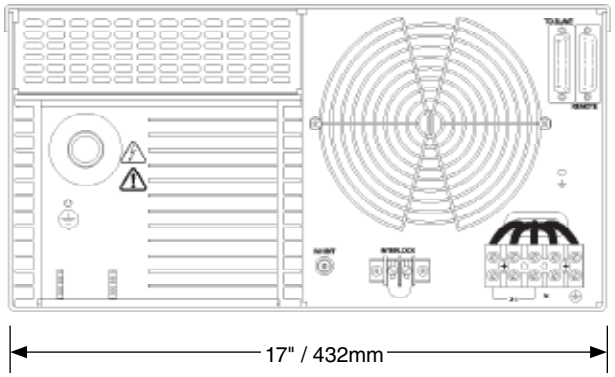

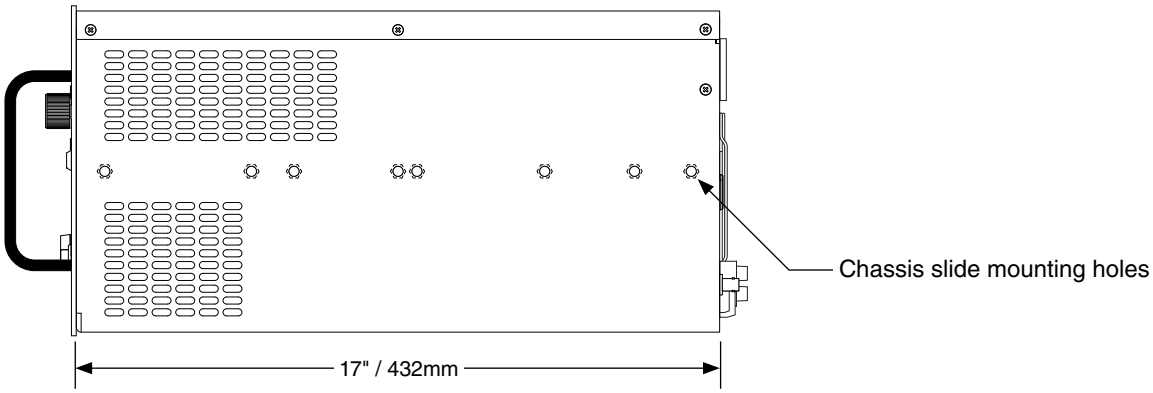

Notes:

1 - Chassis slide mounting pattern matches General Devices CT series or equivalent with 3.875" hole spacing.

2 - Cooling air exits rear of unit and enters at either side. Do not block air vents or cooling fan and allow several inches of clearance at rear of unit.

3 - Allow 6" bend radius at rear of unit for HV cable.

GLOBAL HIGH VOLTAGE NETWORK

NORTH AMERICA

TDK-Lambda Americas Inc., High Power Division
405 Essex Rd. Neptune, NJ 07753
Tel: +1-732-922-9300, Fax: +1-732-922-1441
E-mail: andy.tydeman@us.tdk-lambda.com
Web: www.us.tdk-lambda.com/hp

CANADA

TMetrix
5805 Kennedy Road Mississauga,
Ontario L4Z 2G3
Tel: +1-905-890-2010, Fax: +1-905-890-1959
E-mail: lambda@aca.ca, Web: tmetrix.com

UK **IRELAND**

Pulse Power & Measurement Ltd.
65 Shrivenham Hundred Business Park
Watchfield, Swindon
Wiltshire, SN6 8TY
Tel: +44-1793-784389, Fax: +44-1793-784391
Email: sales@ppm.co.uk, Web: www.ppmpower.co.uk

FRANCE **BELGIUM** **SPAIN** **NETHERLANDS** **LUXEMBOURG**

TDK-Lambda France
ZAC des Delaches CS 41077, 9 rue Thuillere
91978 Villebon Courtaboeuf
Tel: +33 1 60 12 71 65, Fax: +33 1 60 12 71 66
Email: france@fr.tdk-lambda.com
Web: www.fr.tdk-lambda.com

GERMANY **AUSTRIA** **SWITZERLAND**

Guth GmbH
Spitzenbergstrasse 6
D – 73084 Salach
Tel: +49-7162-948930, Fax: +49-7162-9489399
Email: kontakt@guth-hv.de, Web: www.guth-hv.de

ITALY

TDK-Lambda Italy
Via dei Lavoratori 128/130
IT 20092 Cinisello Balsamo (MI)
Tel: +39-02-6129-3863, Fax: +39-02-6129-0900
Email: info.italia@it.tdk-lambda.com
Web: www.it.tdk-lambda.com

SCANDINAVIA **BALTICS**

Divisoft AB
Rallarvägen 41, SE-184 40 Åkersberga, Sweden
Tel: +46 8 540 248 09, Fax: +46 8 501 096 53
Email: iain@divisoft.se, Web: www.divisoft.se

ISRAEL **RUSSIA** **UKRAINE**

TDK-Lambda Israel Ltd.
Kibbutz Givat Hashlosha Tel-Aviv 48800
Tel: +972-3-9024-333, Fax: +972-3-9024-777
Email: info@tdk-lambda.co.il, Web: www.tdk-lambda.co.il

BRAZIL

Suplitec
Rua Sena Madureira 455, Belo Hte - 31340-000
Tel: +55-31-3498 1177, Fax: +55-31-3441 0841
Email: vendas@suplitec.com.br, Web: www.suplitec.com.br

MEXICO

AcMax De Mexico
Rosas 139 Col. Bugambilias. Puebla, Pue. C.P. 72580
Tel: +52-800-211-0060, Fax: +52-264-1445
Email: edaena@acmax.mx, Web: www.acmax.mx

JAPAN **KOREA**

Electronics Optics Research, Ltd
4-26-19 Koenji-Minami
Suginami-ku, Tokyo 166-0003
Tel: +81-333-145699, Fax: +81-333-142333
Email: imamura@eor.jp, Web: www.eor.jp

CHINA

TDK-Lambda Shanghai Office
2nd Floor of Building No.1, No.15 Guiqing Road,
Shanghai, 200233 P.R. China
Tel: +86-21-64850777, Fax: +86-21-64850666
Email:sales-sh@cn.tdk-lambda.com
Web: www.cn.tdk-lambda.com

MALAYSIA

TDK-Lambda Malaysia
No.7.3, 7th Floor, Jaya Shopping Center,
Jalan Semangat Section 14, 46100
Petaling Jaya Selangor, D.E
Tel: +60-3-7957-8800 Fax: +60-3-7958-2400
Web: www.tdk-lambda.com.my

SINGAPORE **PHILIPPINES** **THAILAND**

TDK-Lambda Singapore
1008 Toa Payoh North # 06-01/08
Singapore 318996
Tel: +65-6251-7211 Fax: +65-6250-9171
Web: www.se.tdk-lambda.com

INDIA

TDK-Lambda India
#526, Ground Floor, 10th Main, 7th Cross,
Jeevanbhimanagar, Bangalore 560 075, Karnataka, India
Tel : +91-80-43550500, Fax :+91-80-43550501
Email: mathew.philip@in.tdk-lambda.com
Web www.in.tdk-lambda.com

SOUTH AFRICA

PaR Systems (Pty) Ltd.
Pretoria, South Africa
Tel: +27-12-5480370, Fax: +27-12-5480447
Email: ndupreez@par.com
Web: www.sdilasers.com

93 008 010 Rev F

TDK-Lambda Americas Inc. 405 Essex Road, Neptune, NJ 07753 USA
Tel: +1 732 922 9300 Fax: +1 732 922 1441
www.us.tdk-lambda.com/hp

OPERATOR MANUAL FOR

802 Series High Voltage

POWER SUPPLY

Document: 83488001 Rev L

TDK-LAMBDA AMERICAS

405 Essex Road, Neptune, NJ 07753

Tel: (732) 922-9300

Fax: (732) 922-9334

Web: www.us.tdk-lambda.com/hp

PAGE LEFT INTENTIONALLY BLANK

ONE YEAR WARRANTY

TDK-Lambda Americas, Inc. (405 Essex Road, Neptune, N.J. 07753), warrants that the unit is free from defects in material or workmanship for a period of ONE YEAR from the date of initial shipment. TDK-Lambda Americas Inc. will service and, at its option, repair or replace parts which prove to be defective. This will be done free of charge during the stated warranty period. This warranty excludes defects resulting from misuse, unauthorized modification, operation outside the environmental or safety specifications of the power supply, or improper site preparation or maintenance. The customer shall contact TDK-Lambda Americas Inc., for warranty service or repair as described in the RETURNING EQUIPMENT section. The customer shall prepay shipping charges. If the unit is covered under the foregoing warranty, then TDK-Lambda Americas Inc. shall pay the return shipping charges.

The “WARRANTY”, “CLAIM FOR DAMAGE IN SHIPMENT”, and “RETURNING EQUIPMENT” information applies to equipment purchased directly from TDK-Lambda Americas Inc. End users receiving equipment from a third party should consult the appropriate service organization for assistance with these issues.

THIS LIMITED WARRANTY IS IN LIEU OF, AND TDK-LAMBDA AMERICAS INC. DISCLAIMS AND EXCLUDES, ALL OTHER WARRANTIES, STATUTORY, EXPRESS OR IMPLIED, INCLUDING, WITHOUT LIMITATION, ANY WARRANTY OF MERCHANTABILITY OR FITNESS FOR A PARTICULAR PURPOSE, OR OF CONFORMITY TO MODELS OR SAMPLES.

CERTIFICATION

All test and measuring equipment used by TDK-Lambda Americas Inc. for Final Acceptance Testing are traceable to primary standards certified by the National Institute of Standards and Technology.

LETHAL VOLTAGES PRESENT!

All power supplies contain hazardous voltage and energy. The power supply must only be operated by qualified personnel who have read this operator’s manual and are familiar with the operation, hazards and application of the power supply. Proper care and judgment must always be observed.

1. Before connecting input AC power, ensure all covers are in place and securely fastened. Ensure the required safety ground to chassis is installed and sufficient cooling is supplied.
2. Proper grounding from the input AC power is required to reduce the risk of electric shock, and to comply with safety agency and code requirements.
3. Use extreme caution when connecting input AC power. Only apply the input voltage specified on the rating label.
4. Use extreme caution when connecting any high voltage cables. Never handle any output cables when the power supply is operating.
5. After a power supply is switched OFF, its output section will retain a charge which may be lethal. Allow sufficient time for self-discharge before handling anything connected to the output. The discharge time specified in the Safety Notes does *NOT* include extra time required to discharge the energy stored in the user’s load.
6. When user serviceable fuses are present, always replace fuses with the same type and Volt/Amp rating.
7. Never attempt to operate the power supply in any manner not described in this manual.
8. Never remove DANGER or WARNING labels from the power supply. Replace lost or damaged labels immediately. Contact TDK-Lambda Americas Customer Service for replacement labels.
9. The power supply may be serviced only by TDK-Lambda Americas Inc. factory qualified service personnel. Breaking the warranty seal will void the warranty. Prior to opening the power supply, contact TDK-Lambda Americas Inc. Customer Service for a written Service Waiver and a replacement warranty seal.

TDK-Lambda

MANUFACTURER'S PRODUCT DECLARATION

INTENDED PURPOSE (USE)

The Power Supplies described by this manual are defined by TDK-Lambda Americas Inc. as a component for use in the composition of an apparatus as defined in Article 1 (1) of the EMC Directive (89/336/EEC). These products, as individual components, do not perform in themselves a direct function for the user of the end product. They are not intended to be placed on the market with a direct function to a final user! As such, the products described by this manual are not subject to the provisions of the EMC Directive (89/336/EEC, with amendment 92/31/EEC).

The products described by this manual are intended for incorporation into a final product by a professional assembler. It is the responsibility of the assembler to ensure that the final apparatus or system incorporating our products complies with all relevant EMC standards for that final product.

OPERATING ENVIRONMENT

The operating environment as defined by TDK-Lambda Americas Inc., for the products described by this manual is stated as follows:

The Power Supplies described by this manual are intended for use in a protected industrial environment or in proximity to industrial power installations. These locations are often referred to as industrial locations containing establishments that are not connected to the low voltage public mains network.

Industrial locations are characterized by the existence of one or more of the following conditions:

1) industrial, scientific and medical (ISM) apparatus are present;
2) heavy inductive or capacitive loads are frequently switched;
3) currents and associated magnetic fields are high;
4) location supplied by their own transformer.

These components are not intended for connection to a public mains network, but are intended to be connected to a power network supplied from a high or medium-voltage transformer dedicated for the supply of an installation feeding manufacturing or similar operations. They are suitable for use in all establishments other than domestic and those directly connected to a low voltage power supply network which supplies buildings used for domestic purposes.

TDK-Lambda

Description of symbols used in product labeling

SYMBOL	PUBLICATION	DESCRIPTION
	EC Council Directive 93/68/EEC	European Community Conformity Assessment Product Mark
	IEC 348	Attention, consult Accompanying documents
	IEC 60417-1-5036	Dangerous voltage
	IEC 60417-1-5019	Protective earth (e.g. power line earth ground)
	IEC 60417-1-5017	Functional earth (e.g. chassis ground)
	IEC 60417-1-5134	Electrostatic Discharge (ESD) Sensitive Device

ELECTRICAL STANDARDS

All company primary standards are either certified or are traceable to certification by the National Institute of Standards and Technology.

CLAIM FOR DAMAGE IN SHIPMENT

This instrument received comprehensive mechanical and electrical inspection before shipment. Immediately upon receipt from the carrier, and before operation, this instrument should be inspected visually for damage caused in shipment. If such inspection reveals damage in any way, a claim should be filed with the carrier. A full report of damage should be obtained by the claim agent and this report should be forwarded to us. We will then provide a disposition of the equipment and arrange for repair or replacement.

When referring to this equipment, always include the model and serial numbers.

The "WARRANTY", "CLAIM FOR DAMAGE IN SHIPMENT", and "RETURNING EQUIPMENT" information applies to equipment purchased directly from TDK-Lambda Americas Inc. End users receiving equipment from a third party should consult the appropriate service organization for assistance with these issues.

RETURNING EQUIPMENT

Before returning any equipment to the factory, the following steps shall be taken.

1. Notify TDK-Lambda Americas Inc. at 732-918-6888 or follow the instructions at www.US.TDK-Lambda.com/HP/service.htm. Give a full description of the difficulty including the model and serial number of the unit in question. Upon receipt of this information, we will assign a Return Material Authorization (RMA) number and provide shipping instructions.
2. The customer shall prepay shipping charges. Equipment returned to us must be packed in a manner to reach us without damage. The shipping container must be marked with the RMA number in an area approximate to the shipping label with numbers that are easy to read. All returned units that do not show the RMA number on the outside of the container will be refused.

   If the equipment is repaired within the warranty agreement, than TDK-Lambda Americas Inc. shall pay for the return shipping to the customer.
3. For non-warranty repairs, we will submit a cost estimate for your approval prior to proceeding. The customer shall pay return shipping charges.

MECHANICAL INSTALLATION

Most power supplies are heavy and, when rack mounted, they should be supported by rails along the sides of the supply from front to rear. The rails must adequately support the unit and not block airflow. Do not support the power supply from the front panel only.

Table of Contents

List of Figures

List of Tables

Notes

1. GENERAL INFORMATION

1.1. User Manual Content

This User's Manual contains the operating instructions, installation instructions and specifications for the ALE 802 series high voltage power supply. The instructions refer to standard power supply models, and include checkout, installation, and operation of the 802 series. Suggestions and requirements for connecting AC power, load cables and signal cables are given. Various operating modes and programming modes are described.

The model 802 is just one model in a broad family of HV power supplies covering the power range from 500J/sec to 30kJ/sec in a single package, and to 1MW and beyond in parallel systems. For more information please visit our web site at: http://www.us.tdk-lambda.com/hp/product_html/high_volt.htm.

NOTE

This manual contains information, instructions and diagrams which apply to standard constructions. If special features or modifications have been installed, the instructions specific to that modification are contained in Addenda and take precedence if conflicts exist. Please take care to refer to the correct information for your unit.

1.2. Introduction

TDK-Lambda Americas ALE model 802 are state of the art constant current switch mode high voltage power supplies, designed to rapidly and efficiently charge capacitors in laser systems, modulators, pulse forming networks, and a broad range of pulse generator circuits, without the need for a series current limiting resistor. They can also be used in many continuous DC applications including beam power for RF devices such as magnetrons, gyrotrons, klystrons and electron beam loads.

The 802 series utilize a high frequency IGBT based series resonant inverter topology which operates as a constant current source. This makes the supply perfect for rapidly charging capacitors which represent a challenging load for conventional HV DC supplies using multiplier designs.

The 802 series is available with a choice of three different front panel configurations designed to suit different applications and end uses. All models feature the same comprehensive remote control interface which is detailed in Section 6.2.

The **802L** Model is fully instrumented with front panel meters displaying output voltage and current, status LEDs, a key switch for OFF, LOCAL or REMOTE operation, HV ON/OFF push-button switches, and a 10 Turn output voltage control. The rear panel features external interlock, inhibit, remote control and slave (parallel operation) control connections.

The **802S** Model can only be operated by remote control and features only status LEDs and a power switch on the front panel. The "S" Models have been designed to operate as a slave unit to the "L" Models or in systems where local control is not a requirement.

The **802OEM** features a blank aluminum front panel and can only be operated by remote control.

As many 802 supplies as required, can be connected in parallel to provide greater output power.

1.3. 802 Overview

1.3.1. Features

- 8kJ/sec capacitor charging power, 8kW in continuous DC applications.
- Output voltages from 0-1kV to 0-50kV.
- Rep rates from single shot to kilohertz.
- Local (L Model) or remote operation with comprehensive control interface.
- Cost effective blank front panel version for OEM applications.
- Constant current topology for rapid efficient charging.
- Parallel operation (master/slave) for high power applications.
- Compact Air Cooled design.
- Passive Power Factor Correction reduces RMS current draw.

1.3.2. Benefits

- Lightweight switchmode design.
- Rack mount chassis configuration.
- Low stored energy provides greater safety.
- Constant current design eliminates series current limit resistance in charge circuit.
- Immunity to external EMI.

1.3.3. Applications

- Charging capacitors and capacitor banks.
- Powering pulse forming networks/modulators.
- Powering lasers: Excimer, flashlamp pumped dye, Yag, CO_2, etc.
- Continuous power for RF tubes – magnetron, gyrotron, TWT, klystron etc.
- Electron beam applications.
- DC power source for pulsed hard-tube and solid state modulators.

1.4. Capacitor Charging Technology

Capacitor charging applications require a power supply designed specifically for the task. The 802 series supplies allow capacitors to be charged in pulse forming networks and modulators in a very fast, efficient and controllable manner.

The units are compact high power constant current sources that can linearly and rapidly charge a capacitive load to high voltage. Once the load capacitor is charged to the programmed voltage, the supply will switch over to a voltage regulation mode and maintain the load voltage at the programmed level until it is discharged.

The flexible design of the 802 allows the unit to be ordered with (L model) or without (S and OEM model) the front panel controls and meters. Front panel controls are ideal in applications where local control and read backs are necessary, such as R&D, laboratory use and diagnostics. All front panel controls and indicator signals are available at the rear panel remote control connector regardless which panel option (L, S, or OEM) is selected.

The unit is self-contained, requiring only AC power and appropriate controls. Several units may be connected in parallel for higher power operation. There is no theoretical limit to the number of units that may be paralleled. Typically one master unit and one or more slave or OEM units may be used to obtain as much output power as necessary. The 802 is also ideally suited to charge reservoir capacitors in resonant charging circuits where high rep rates (several kilohertz) are required, such as in metal vapor lasers or solid-state modulators.

1.5. Continuous DC Operation

Although the 802 series has been designed for capacitor charging applications, they can also be used as a continuous DC High Power Source for RF tubes such as klystrons, TWTs, or other DC loads such as DC-DC converters. The DC option must be specified when ordering, and the supply will be factory setup and tested with a continuous DC load. When 802 supplies are operated in continuous DC applications it is often necessary to add an external capacitor between the load and ground to improve the ripple performance of the unit. Our online Application Note 505 describes operating capacitor charging supplies in DC applications, and gives guidance in determining the size of any additional external filter capacitance required. App Note 505 can be found at:

http://www.us.tdk-lambda.com/hp/pdfs/application%20notes/93008505rC.pdf

Consult the factory before connecting parallel units in continuous DC applications.

1.6. Additional Features:

- Internal contactor and fuses for AC disconnect and protection
- Standard AC power and control connectors
- Documentation Manual Including -
- Installation, check out, suggested remote interfaces and control circuits
- 10 ft (3m). Output cable is standard, other lengths are optional.

1.7. Safety Precautions

All 802 power supplies are designed to minimize the risk of fire or shock hazard. This instrument received comprehensive mechanical and electrical inspection prior to shipment. Nevertheless, certain safety precautions must be observed. Only TECHNICALLY QUALIFIED SERVICE PERSONNEL familiar with the principles of electrical safety should operate this supply. The power supply SHOULD NOT BE EXPOSED TO WATER OR MOISTURE OR DUSTY ENVIRONMENTS. Electrical safety must be maintained at all times.

Lethal voltages are developed within the power supply's enclosure and at the output cable. Therefore, the cover may not be removed by the user (see Warranty in preamble section for variance). Also, the large capacitors in the supply may store power even after the AC input line is removed. ALLOW AT LEAST 40 SECONDS DISCHARGE TIME between removing the AC input line and opening the cover. ALSO, ALLOW AT LEAST 40 SECONDS between switching the AC power off and switching it on again.

1.7.1. This product is designed for Indoor use.

1.7.2. This product is designed for pollution degree 2.

1.7.3. This product is designed for Transient Overvoltage Category II

1.7.4. Ensure all covers are in place and securely fastened before switching ON the AC power.

1.7.5. Proper grounding from the input AC power is required to reduce the risk of electric shock. Ensure that the AC Protective Earth Ground connection has at least the same gauge wire as the supply leads shown in Table 2.

1.7.6. Use extreme caution when connecting AC input power, and never apply the incorrect input voltage, refer to ratings label.

1.7.7. Use extreme caution when connecting the high voltage output cable to the load.

1.7.8. Ensure all load capacitors are completely discharged prior to connection. Never handle the output cable when the power supply is operating.

1.7.9. Never attempt to operate the power supply in any manner not described in this manual.

1.7.10. Never remove DANGER and WARNING labels from the power supply. Replace lost or damaged labels immediately.

1.7.11. The power supply should only be serviced by factory authorized personnel.

1.7.12. No user maintenance is required.

1.8. Model Number Format

The model numbering system for the 802 Series power supply includes symbols for features and options. They are separated by dashes.

Examples are: 802L-10kV-POS-400VAC and 802S-20kV-POS-DC.

The 802 is available with three front panel configurations, the L, S, and OEM. The choice of panel configuration is dependent upon the installation and system requirements. See section 5 for further details.

Table 1 shows a partial listing of the model description format for the 802 Power Supply family. For additional options, the customer may contact the Sales Department at TDK-Lambda Americas. Special options are typically shown as a four-digit suffix to the model number.

802(model) - (voltage) - (polarity) - (mode) - (input) - (options)

Model (L, S, OEM)
Output Voltage Range kV
POS or NEG Polarity

Mode		
Standard	Capacitor Charging	Blank
DC	Continuous DC Operation	DC

AC INPUT VOLTAGE	Input	Suffix
Standard	200-240VAC, 50-60Hz, 3ϕ (40A Max)	Blank
400VAC Option	380-440VAC + N, 50-60Hz 3ϕ (25A Max)	400VAC

OPTIONS	
5V Programming	5V
Low Enable	EN
Latching Overload	LP
AC Contactor (OEM only)	CT
Custom cable length	xxxx

Table 1 :802 Model Description Format .

2. SPECIFICATION

2.1. Average Charging Power	8,000 Joules/sec ($\frac{1}{2}CV^2$ x Rep Rate)
2.2. Peak Charging Power	9,000 Joules/sec ($\frac{1}{2}CV^2 / t_{charge}$)
2.3. Average DC Power	8,000 Watts
2.4. Output Voltage Range	1, 2, 4, 5, 10, 15, 20, 30, 40, 50kV, variable from 10-100% of rated. Other voltages on request, please contact the factory.
2.5. Polarity	Available as fixed Positive or Negative. Please specify at time of ordering
2.6. HV Output Cable	1-39kV Models - DS2124 Coaxial cable with proprietary HV connector
	40-50kV Models - DS2214 Coaxial cable with proprietary HV connector
2.7. HV Insulating Medium	Exxon Mobil Univolt N61B or equivalent insulating oil
2.8. AC Input Voltage	200-240VAC (180-264), 3Ø or 380-440VAC (340-460), 3Ø + N, 50-60Hz Please specify at time of ordering
2.9. AC Input Current	40A for 200-240VAC Input / 25A for 380-440VAC input
2.10. AC Connector	UL/CSA approved terminal block. 3Ø + GND for 200-240VAC, 3Ø + N + GND for 380-440VAC
2.11. AC Line Contactor	UL/CSA approved AC line contactor (standard on 802L and 802S, option for 802OEM)
2.12. Power Factor	Passive PFC pf = 0.85 at full load and nominal AC line
2.13. Efficiency	Better than 85% at full load
2.14. Front Panel	802L - Voltage Control, Voltage & Current Meters, Status Indicators
	802S - On/Off Switch, Status Indicators
	802-OEM - Blank front panel
2.15. Stability	0.2% per hour after 1 hour warmup
2.16. Temperature Coefficient	100ppm per °C typical
2.17. Stored Energy	Less than 0.3J all models
2.18. Pulse to Pulse Repeatability	±2% to 1000Hz, consult factory for higher rep rates
2.19. Dimensions - inches (mm)	19 (483) W x 8.75 (222) H x 17 (432) D
2.20. Weight - lbs (kg)	80 (37)
2.21. Ambient Temperature	Storage: -20 to +70°C. Operating: -20 to +45°C
2.22. Altitude	Storage: 40,000ft (12,000m), Operating: 9,900ft (3,000m)
2.23. Humidity	10-90%, non-condensing
2.24. Protection	Open/short circuits, Overloads, Arcs, Overtemp, Overvoltage, Safety Interlock
2.25. Remote Control (all models)	Via 25-pin D-sub connector on rear of unit, Signals include, Vprogram (0-10V), HV Enable/Reset, Inhibit, Summary Fault, Load Fault, Vanalog, Vpeak
2.26. Accessories	10ft HV cable, operating manual

2.27. Options	EN - Low Enable. Replaces standard high enable
	5V - 0-5V Analog programming. Replaces standard 0-10V programming.
	LP - Latching Overload Protection, requires HV reset after overload fault
	DC - Continuous DC operation
	CT - AC line contactor (option for 802-OEM only, standard on 802L and 802S)
	Double terminated HV cable, and mating bulkhead connector
2.28. Ordering Info	Model - XXkV - POS (or NEG) - YYYVAC - ZZ (options)
2.29. Ordering Examples	802L-10kV-POS, 802S-1kV-NEG-DC, 802-OEM-50kV-POS-400VAC
All specifications subject to change without notice	

3. OUT OF BOX INSPECTION

3.1. Visual Inspection

Prior to shipment, this instrument was inspected and found to be free of mechanical and electrical defects. As soon as the unit is unpacked, inspect for any damage that may have occurred in transit. Verify the following:

a) Check the operation of the front panel control (knob should rotate smoothly).
b) Confirm that there are no dents or scratches on the panel surfaces.
c) Check front panel meters and LEDs for any broken or cracked lenses.

If any damage is found, follow the instructions in Section 3.3.

3.2. Electrical Inspection

Before the power supply is installed in a system, verify that no internal damage occurred during shipping. A set of simple preliminary electrical test can be performed if desired. These tests are described below.

NOTE
The sequences described are for L model supplies with local controls, for S and OEM models the corresponding signals must be applied and monitored through the remote control interface.

3.2.1. Test 1

Purpose: Verify general logic operation, generate maximum output current, and check overload protection circuits. With AC power "OFF" and disconnected, short the HV output by connecting the center conductor of the output cable to its return shield (braid). This dead short will allow the unit to generate full output current at zero voltage.

1. Set the output voltage control to zero. Connect AC power to the unit. Turn "ON" the AC power front panel switch.
2. Turn the front panel keyswitch to the LOCAL position (if applicable). Press the HV "ON" button and turn up the HV control until the power supply is generating output current into the dead short. The current meter will indicate max. current. The voltage meter will read zero and the power supply will intermittently turn on and off indicating the "overload" condition. The unit should continue to indefinitely cycle in this mode with a 1 second period. (The power supply will go into overload when max. current is drawn for more than half a second). If the LP option is installed, the unit will shut down and indicate a fault after delivering full current for 500milliS.
3. Turn off the HV and AC power switches.

This test indicates the inverter section is generating maximum current and the logic and overload circuitry works correctly.

3.2.2. Test 2

Purpose: Verify that the power supply generates maximum rated voltage, and the regulation and feedback circuits are functioning.

1. With AC power OFF and disconnected, connect an appropriate load capacitor to the power supply output cable. Select the capacitor size so the charge time is several milliseconds or more.
2. Prepare to charge the capacitor. NOTE: Operating a 802 power supply into an open circuit (no load operation) will instantly damage the power supply's HV output

diodes. Make sure the load (capacitor) is connected and the HV output cable is securely inserted and connected.

3. Turn the voltage control on the front panel all the way down to zero (counter clockwise), apply AC power, turn the front panel keyswitch to the LOCAL position (if applicable), and press the HV ON button. By turning up the HV control knob the capacitor will charge to the voltage indicated on the front panel voltmeter. The power supply may be turned all the way up to its max. output voltage provided the load capacitor is sufficiently rated.
4. By turning the voltage control down or depressing the HV OFF button, the capacitor will slowly "bleed" down through the internal voltage divider resistors used for regulation feedback. Use an external discharge wand to ensure the capacitor is fully discharged.

Test #2 indicates the HV section is working correctly. Tests 1 and 2 generally indicate the unit is functioning as designed. Although 100% power had not been generated, these two tests give greater than 90% confidence that the unit is not damaged.

If any inconsistency from the above test procedure is noted, do not hesitate to call TDK-Lambda Americas Customer Service for assistance.

3.3. Contacting TDK-Lambda Americas Customer Service

When contacting customer service locate the product description, part number and serial number from the label located on the rear of the unit, and have this information available.

Phone: (732) 922-9300 E-mail: hp.service@us.tdk-lambda.com
Fax: (732) 922-1441

Customer Service, or an approved Service Center, should be contacted if:

- The power supply is mechanically or electrically damaged.
- The power supply requires on-site calibration, or replacement warning decals.
- The customer has questions about a special application that is not described in this manual.

Normally, the customer may *NOT* open any chassis covers that have a warranty seal. Breaking a seal will void the warranty.

At the discretion of TDK-Lambda Americas, the customer may be granted permission to break the warranty seal and open the chassis covers. Customer Service shall confirm the permission by sending a replacement seal. Once the unit has been serviced, the customer shall close the cover and apply the replacement seal adjacent to (not on top of) the broken seal.

3.4. Returning Defective Units

If a unit needs to be returned to the factory for repair, the factory must first assign an RMA number. Please complete and send the online RMA request form at http://www.us.tdk-lambda.com/hp/RMA_request.htm and an RMA number will be assigned. Follow the return instructions on the form or at http://www.us.tdk-lambda.com/hp/returns.htm.

4. INSTALLATION

4.1. 19-Inch Rack Mounting

This power supply is intended for mounting in a conventional 19-inch equipment rack. It's 8.75 inch height makes it a "5U" size instrument. The rack should enclose the sides, top and back to protect the operator from electrical shock and protect the supply from environmental contamination.

> ⚠ Never install the 802 so its weight is supported only by the front panel screws!

The 802 must never be installed without support in the back or sides of the unit. The 802 should be mounted on support rails or chassis slides –such as General Devices CTS-124- or on a suitable shelf or supports inside the rack.

The mechanical outline of the 802 is shown in Figures1 through 3.

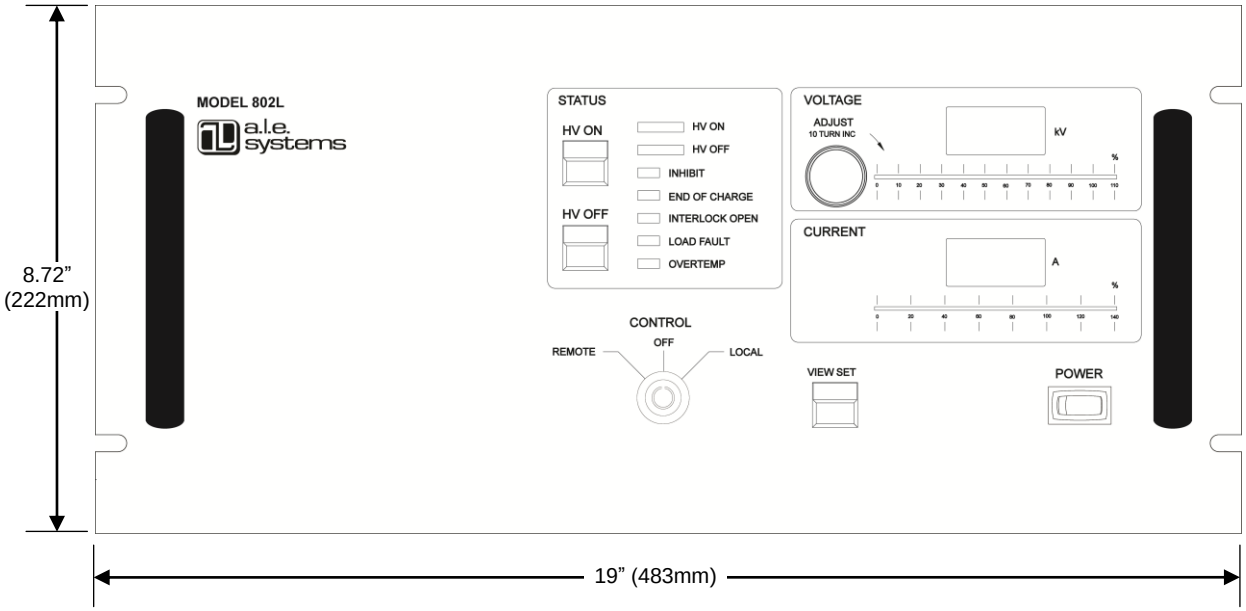

Figure 1. 802L Front View

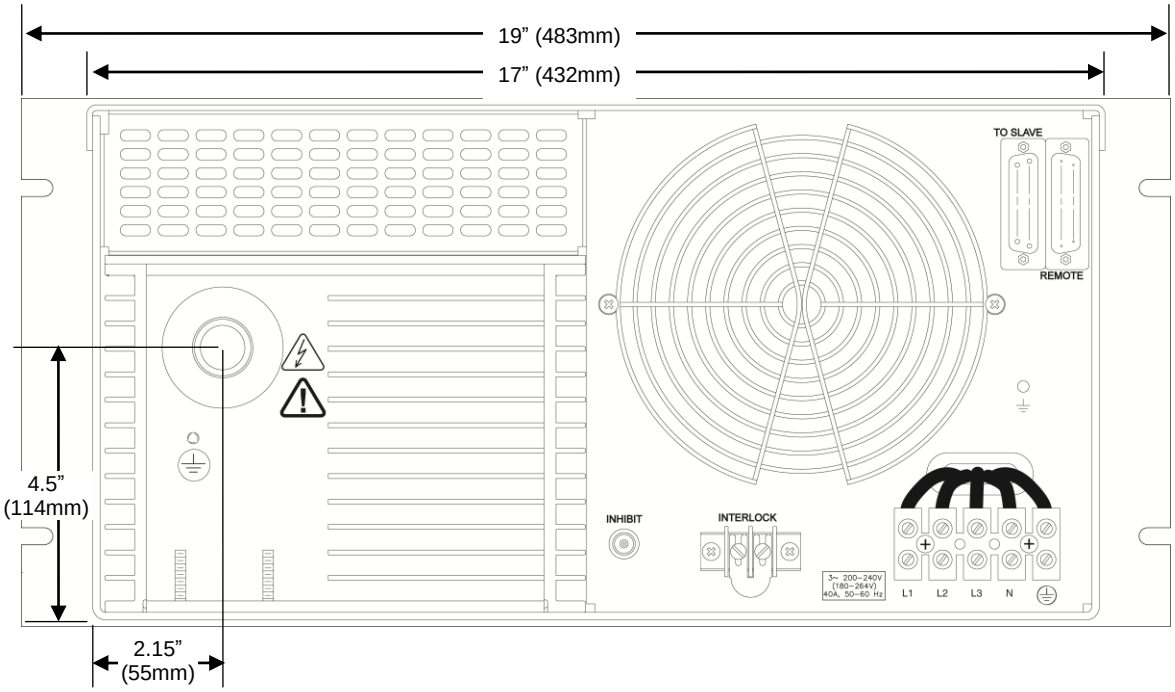

Figure 2. 802L Rear View

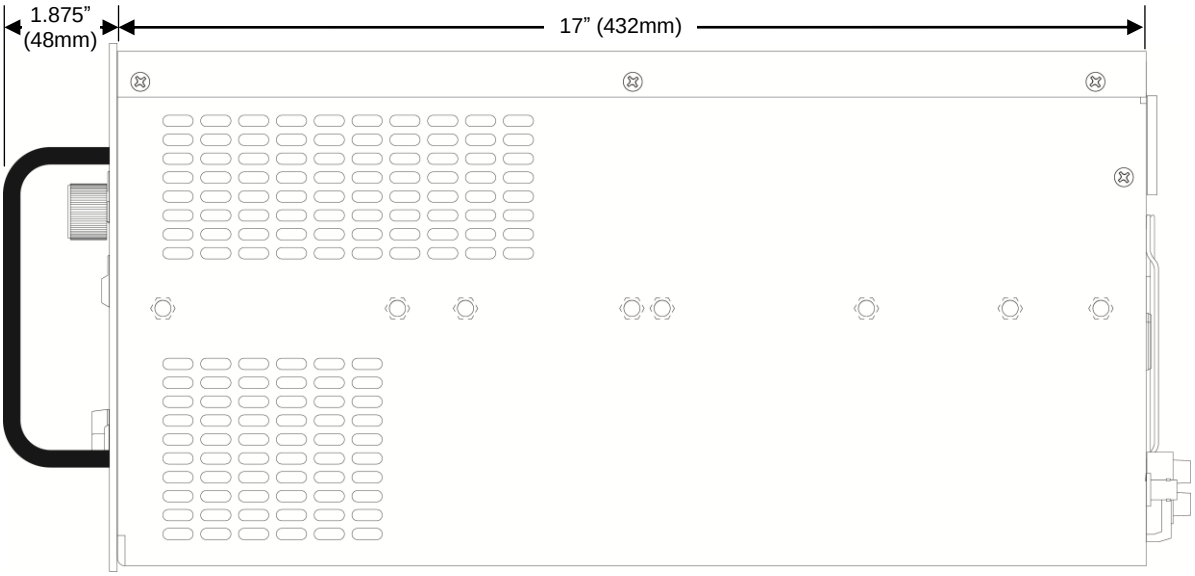

Figure 3. 802L Side View

4.2. Ventilation Requirements

This instrument is fan cooled. Sufficient space must be allocated so that a free flow of cooling air can reach the back and sides of the instrument when it is in operation. Ensure these clearances are met for adequate air flow:

- 4 inches (10 cm) rear
- 1 inch (2.5 cm) on each side.

Cooling air exits through the rear of the unit, and enters through the side panels and around the HV tank. This power supply should not be operated with its cover removed since the cover directs the flow from the internal fan.

When operating in an enclosed system, care must be taken to ensure the ambient inlet air to the power supply does not exceed the maximum operating temperature of 45°C. This may require addition of a system heat exchanger.

4.3. Orientation

The power supply must be operated in a level horizontal orientation. More than a quarter of an inch (6.25mm) difference in height in any direction could potentially cause an arcing condition in the high voltage tank and should be avoided.

4.4. AC Power Connection

For 200-240VAC models, the maximum voltage allowed between any two AC input terminals is 264VAC. For 380-440VAC models, the maximum voltage allowed between any two AC input terminals is 460VAC. If this voltage is exceeded, catastrophic damage will result, that is not covered by TDK-Lambda Americas standard warranty.

The customer's AC power line connects to the 802 via a UL/CSA approved 5 position terminal block on the rear panel of the unit (see Figure 1). Only use a power cable with the correct voltage and current rating (see Table 2). The ground wire must be equal to or larger than the recommended gauge. Secure grounding of the input AC power is required to reduce the risk of electric shock. The metal chassis of the power supply is grounded through the earth wire at the input AC power terminal block. Use extreme caution when connecting input AC power and never apply the incorrect input power.

An external switch or circuit breaker with the following parameters must be used as means of disconnection:

a) Rated voltage not less than maximum rated voltage of the power supply

b) Rated current not less than 150% of the power supply rated current

The switch or circuit breaker must be located in proximity to the power supply and within easy access of the operator. The switch or circuit breaker must be marked as disconnecting device for the equipment.

The Protective Earth Ground must be connected before applying AC Line Power to the 802.

Connect the three lines of the input power to the L1, L2, L3 terminals and the earth ground to the terminal marked with the ground symbol (⏚). No neutral connection is required for the 200-240VAC configuration. For models with the 380-440VAC input configuration (340-460VAC) the neutral wire must be connected to terminal marked N. The power connections are not phase rotation sensitive, so any phase can be connected to any of the AC inputs.

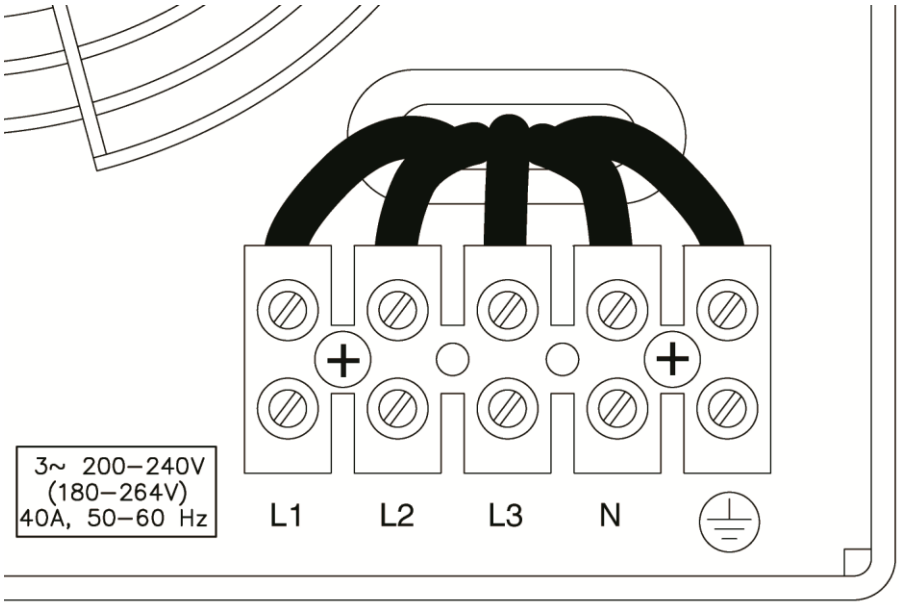

Figure 4 AC Input Terminal Block

If the power supply was purchased with the 400VAC input configuration, in addition to the three phases, the neutral wire must be connected to terminal marked N. Failure to connect the Neutral wire in a 400VAC unit may result in damage to the supply.

AC INPUT VOLTAGE	MODE	RECCOMENDED AC INPUT CABLE SIZE & RATING
200-240VAC (180-264VAC), 50-60 Hz, 3ϕ	Cap Charging	$9mm^2$/8 AWG, 600V
	Continuous DC	$9mm^2$/8 AWG, 600V
380-440VAC (340-460VAC), 50-60 Hz, 3ϕ	Cap Charging	$6mm^2$/10 AWG, 600V
	Continuous DC	$6mm^2$/10 AWG, 600V

Table 2 Recommended AC Input Cable

The AC input rating is marked on the rear terminal of the power supply. The rating is also part of the unit's model description shown in Table 1.

4.5. Connecting the High Voltage Output

> Ensure that the power supply is off and disconnected from the AC input power and that all load capacitors are discharged and shorted to ground before making any connections. Never handle the HV cable while the supply is operating. Never operate the supply without a load capacitor connected.

Before connecting the HV output cable, inspect the cable and check for signs of damage.

Always use the HV connector and cable provided with the power supply or an equivalent substitute provided by TDK-Lambda Americas. Fully insert the connector end of the HV cable and tighten the locking nut only "hand tight".

When operating above 20kV or 200Hz rep rate, silicone grease (such as Dow Corning DC-4) must be applied to the HV cable before insertion into the HV connector. The grease is used to displace air in the connector and reduce long-term corona effects. A cable greasing procedure is available for download from the TDK-Lambda Americas web site.

The load ground must be connected to the chassis ground through a separate safety ground cable with a minimum wire size of 10 AWG in addition to the HV output cable shield (see Figure 5).

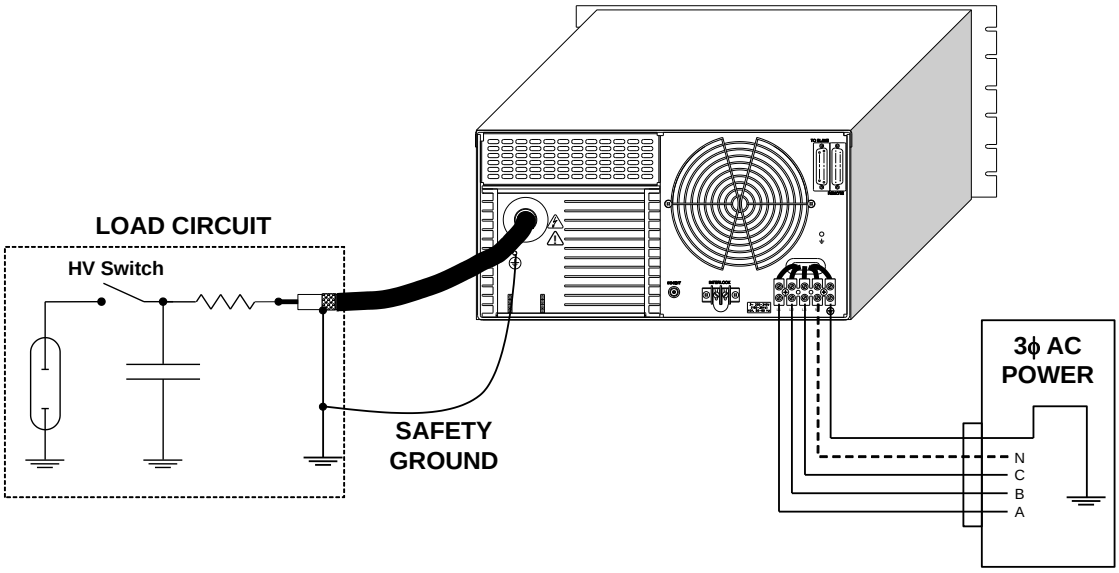

Figure 5 Typical Load Circuit Connection

Some peak current will flow out of the power supply during discharge and return through the HV return and system chassis. This current comes from voltage reversal in underdamped systems and from normal discharge of filter and cable capacitance. The path for this current should not parallel control signal returns since the resulting voltages could interfere with normal system operation.

Currents due to voltage reversal, particularly at high repetition rates can damage the power supply. Generally, a resistor in series with the HV output can be added to limit this current to an acceptable level, but an additional clamp diode may also be required.

Refer to Application Note 517 (available from the factory or at http://www.us.tdk-lambda.com/hp/product_html/high_volt.htm) for more detailed information.

Dress the high voltage cable to create a gentle curve ensuring there are no sharp bends as this will tend to reduce the cable's insulation strength. Strain relieve the load end of the high voltage cable to prevent breaking of, or damage to the center conductor. Keep the HV cables as distant as possible from the input power and the control signals.

To connect the HV cable to the load it is necessary to remove the cable jacket, shield, and any semiconducting layer (if applicable) that remains on the cable insulation after removing the shield.

The cable outer jacket should be removed to reveal the cable shield. At least 12” or 300mm of outer jacket should be removed for suitable voltage hold-off. The exposed shield should be trimmed to an appropriate length and terminated with a ground connection.

For models shipped with DS2214 HV cable (>40kV rated voltage), after the shield is removed, the black semiconducting layer is exposed. This layer should be very carefully removed using a sharp craft knife, and a peeling action. Once the semiconducting layer is removed, the exposed EPR insulation should be cleaned with IPA or an equivalent solvent. If any of the semiconducting layer remains on the HV cable insulation it may cause the cable termination to fail.

For models shipped with the DS2124 HV cable (<40kV rated voltage), there is no semiconducting layer to be removed from the cable insulation, however the exposed polythene cable insulation should be cleaned with IPA.

5. CONTROLS, INDICATORS, CONNECTORS

5.1. Front Panel Layout (L Model)

The 802L series power supply is equipped with a fully instrumented front panel featuring output voltage control, voltage and current metering, and comprehensive status LEDs, along with local/remote mode keyswitch, and power on switch. The 802L can be operated locally from the front panel or remotely via the control connector located on the rear panel (see Section 6.2). Front panel layout of the 802L power supply is shown in Figure 3 below.

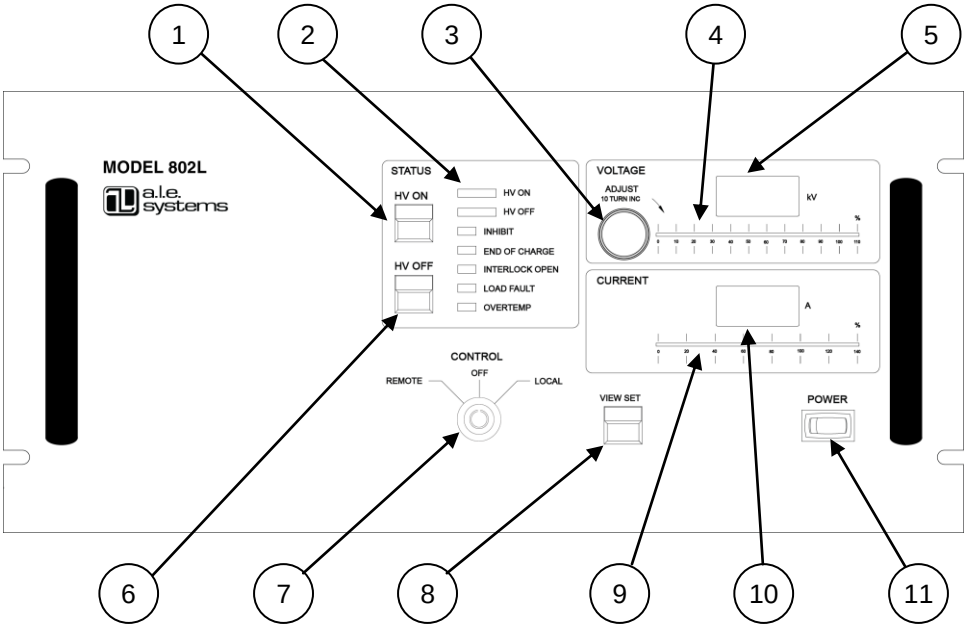

Figure 6 802L Front Panel Controls and Indicators

REF	DESCRIPTION	NOTE	SECTION
1	HV ON Push Button	Turns on HV output	5.2
2	Status LEDs	Indicates status of supply and presence of any faults	5.3
3	Local Voltage Set	10 turn pot for setting output voltage in local mode	5.4
4	Voltage bar graph	Analog bar graph showing output voltage (%)	5.5
5	Voltage Display	Digital display of output or set voltage	5.6
6	HV OFF Push Button	Turn off HV output	5.7
7	Off/Local/Remote Key	Switches control between remote, local, and off modes	5.8
8	View set push button	Push to view the output voltage set point in local mode	5.9
9	Current bar graph	Analog bar graph showing average output current (%)	5.10
10	Current Display	Digital display of average output current	5.11
11	Power switch	Turns on/off power to auxiliary circuits	5.12

Table 3 Front Panel Controls and Indicator Functions (L Model)

The front panel controls/indicators are described in detail in the following sections.

5.2. HV ON Push Button (Ref 1)

DO NOT DEPRESS THE HV ON PUSH-BUTTON UNLESS A SUITABLE CAPACITIVE LOAD IS CONNECTED TO THE POWER SUPPLY'S OUTPUT CABLE, AND THE LOAD IS CORRECTLY GROUNDED.

The HV ON push button is a momentary switch that when depressed turns on HV output in local mode (keyswitch in local position) only if there are no faults present within the supply. If faults are present when the HV ON button is pushed the supply **will not turn on**, and both the HV ON and HV OFF LEDs will illuminate. When both the HV ON and HV OFF LEDS are illuminated together this indicates a Summary Fault. If the keyswitch is in the remote position the HV ON push button has no function.

5.3. Status LEDs (Ref 2)

There are 6 status LEDs on the front panel, indicating the state of the HV Output circuit and various fault detection circuits in the control system.

5.3.1. HV ON LED

The HV ON LED indicates that the HV output circuit is enabled and the supply will deliver output current if it is not inhibited by an external inhibit input. If the HV ON and HV OFF LEDs are illuminated together this indicates a Summary Fault. HV ON LED is active in local and remote modes.

5.3.2. HV OFF LED

The HV OFF LED indicates that the HV output circuit is disabled and the supply cannot deliver output current. If the HV OFF and HV ON LEDs are illuminated together this indicates a Summary Fault. HV OFF LED is active in local and remote modes.

5.3.3. Inhibit LED

If the Inhibit LED is illuminated it indicates the presence of an active inhibit signal, and the supply will not deliver charging current after the HV ON button is pushed. Inhibit is applied either via the rear panel mounted BNC connector or either inhibit input via the remote control connector. Inhibit LED is active in local and remote modes.

5.3.4. END OF CHARGE LED

The END OF CHARGE or EOC LED indicates that the load or output voltage has reached the programmed voltage. EOC LED is active in local and remote modes.

5.3.5. Interlock Open LED

The interlock open LED illuminates if the safety interlock circuit is not closed. The power supply cannot be turned on if the interlock loop is open. If the interlock loop is opened when the unit is running (ie when HV in ON), the unit will turn off with a latching fault, requiring an HV ON/OFF/ON reset cycle before it can be restarted. Interlock Open LED is active in local and remote modes.

5.3.6. Load Fault LED

The load fault LED indicates the presence of a fault in the load circuit due to a short circuit large external capacitor, or an output Overvoltage. An output Overvoltage condition will cause a latching fault requiring an HV ON/OFF/ON reset cycle before it can be restarted. Load Fault LED is active in local and remote modes.

5.3.7. **Overtemp LED**

The overtemp LED indicates an inverter overtemperature condition internal to the supply. The temp fault will clear once the temperature is below the fault threshold, but the unit will not restart without a reset cycle. Overtemp LED is active in local and remote modes.

5.4. Local Voltage Set (Ref 3)

The local voltage set control is an analog 10-turn potentiometer for adjusting the output voltage from zero to full rated output. This control will only operate in local mode. If the supply is operated in remote mode the local voltage set control has no effect.

5.5. Voltage bar graph (Ref 4)

The voltage bar graph is a 'quick view' analog percentage indication of the voltage measured at the power supply output. Bar graph is active in local and remote modes.

5.6. Voltage Display (Ref 5)

The Voltage Display is a 4 digit LED indicator showing the voltage measured at the power supply output. This display momentarily shows the output program voltage after the View Set button is depressed. Voltage Display is active in local and remote modes.

5.7. HV OFF Push Button (Ref 6)

The HV OFF push button is a momentary switch that when depressed turns off HV output. If the power supply shuts off with a summary fault (indicated by HV ON and HV OFF LEDs both illuminated), then this condition can be reset by pushing the HV OFF, HV ON, HV OFF button sequence. If the supply is operated in remote mode the HV OFF push button will still function.

5.8. Off/Local/Remote Keyswitch (Ref 7)

DO NOT MOVE THE KEYSWITCH POSITION FROM OFF TO LOCAL OR REMOTE UNLESS A SUITABLE CAPACITIVE LOAD IS CONNECTED TO THE POWER SUPPLY'S OUTPUT CABLE, AND THE LOAD IS CORRECTLY GROUNDED.

The Off/Local/Remote Keyswitch switches the 802L power supply operating modes between OFF, LOCAL, and REMOTE. The key can be removed in the OFF position to prevent unauthorized use. If the switch is in the LOCAL position the supply will operate from the front panel. In the REMOTE position the supply can only be operated via the remote control interface. An L model supply can simulate an S or OEM model with the key in the REMOTE position.

5.9. View set push button (Ref 8)

The view set push button changes the reading on the digital voltage display from the power supply output voltage, to the programmed voltage set on the local voltage set potentiometer. After pushing this button the set voltage is displayed for approximately 3 seconds.

5.10. Current bar graph (Ref 9)

The current bar graph is a 'quick view' analog percentage indication of the average current delivered by the supply. Bar graph is active in local and remote modes.

5.11. Current Display (Ref 10)

The Current Display is a 4 digit LED indicator showing the average current delivered by the power supply output. Current display is active in local and remote modes.

5.12. Power switch (Ref 11)

The power switch connects AC input power to the control circuitry and causes the internal AC contactor to close if the interlock loop is closed.

5.13. Front Panel Layout (S Model)

The 802S series power supply is equipped with a partially instrumented front panel featuring status LEDs, and a power on switch. The 802S can only be operated remotely via the control connector located on the rear panel (see Section 6.2).

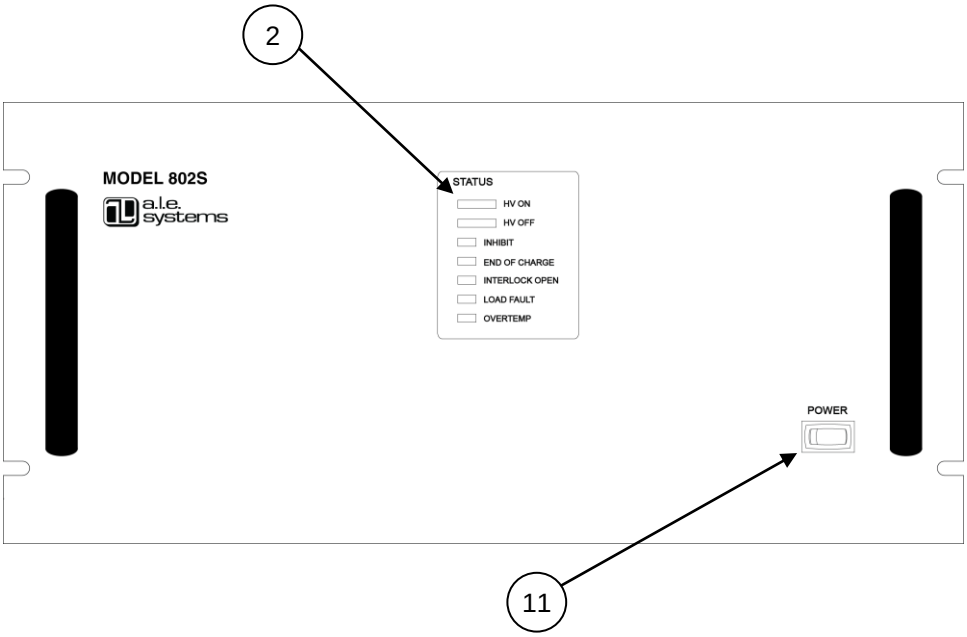

Figure 7 Front Panel Controls and Indicators (S Model)

REF	DESCRIPTION	NOTE	SECTION
2	Status LEDs	Indicates status of supply and presence of any faults	5.3
11	Power switch	Turns on/off power to auxiliary circuits	5.12

Table 4 Front Panel Controls and Indicators (S Model)

A description of the function of the LEDs and the power switch are given in sections 5.3 and 5.12 respectively.

5.14. Front Panel Layout (OEM Model)

The 802OEM front panel is completely blank and features no indicators or switches.

5.15. Rear Panel Layout (L Models)

All of the interconnect and HV connections for the 802L are located on the power supply rear panel.

Figure 8 shows the rear panel layout and location of the various connectors.

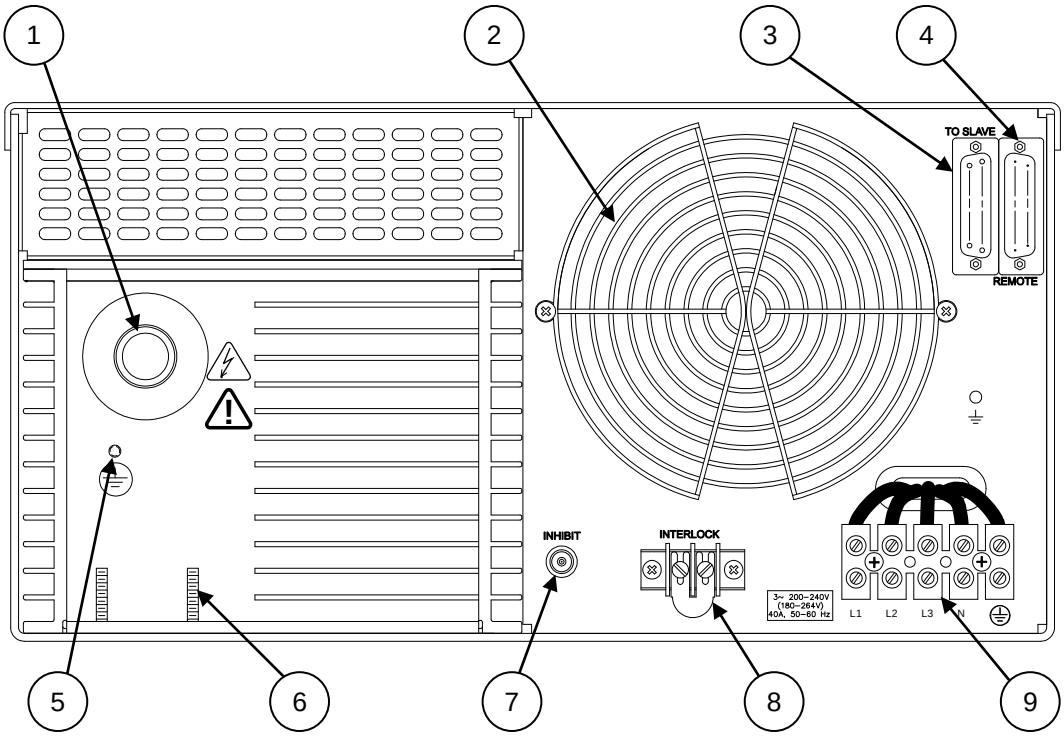

Figure 8 802L Rear Panel Connections

REF	DESCRIPTION	NOTE	SECTION
1	HV Output	HV Output connector, mates with supplied cable via proprietary connector	5.15.1
2	Cooling fan	Main AC cooling fan. Leave at least 4" clearance	5.15.2
3	Slave Interface	25pin male sub-D type plug for control of slave supplies in a parallel system (AMPHENOL 17BDFRA25P)	5.15.3
4	Remote Interface	25pin sub-D type receptacle for remote control of supply in remote mode (AMPHENOL 17BDFRA25S)	5.15.4
5	GND stud	10-32 UNC ground stud	5.15.5
6	GND stud	M5 ground stud (2 positions)	5.15.6
7	Inhibit input	BNC input to allow inhibit of output current	5.15.7
8	Interlock	Terminal for connection to interlock circuit. Contacts are isolated from ground and require dry contact closure for supply to operate.	5.15.8
9	AC Input	5 position terminal block for AC input power	5.15.9

Table 5 802L Rear panel Functions

The function of each item in Table 5 is described in the following sections.

5.15.1. **HV Output Connector (Ref 1)**

Connector socket for mating HV cable supplied with unit. The connector should be kept clean and free from debris at all times. If supply is operated at 20kV or 200Hz rep rate or above the cable should be greased to ensure corona free operation. The cable connector should only be hand tightened, never use a wrench or apply excessive force.

5.15.2. **Cooling Fan (Ref 2)**

Allow at least 4 inches of clearance and do not obstruct clear air flow around the fan. Cooling air exits through the rear of the unit, and enters through the side panels and around the HV tank.

5.15.3. **Slave Connector (Ref 3)**

A 25 pin D-sub female connector that allows connection to a slave supply for increased power operation.

5.15.4. **Remote Connector (Ref 4)**

A 25 pin D-sub male connector that allows remote operation and monitoring of all power supply functions when the unit is operated in REMOTE mode.

5.15.5. **Safety Ground (Ref 5)**

10-32UNC threaded safety ground stud installed in HV tank. Should be used for additional safety ground cable between supply and load circuit.

5.15.6. **Safety Ground (Ref 6)**

M5 threaded safety ground stud installed in HV tank. Should be used for additional safety ground cable between supply and load circuit.

5.15.7. **INHIBIT BNC (Ref 7)**

The inhibit BNC input is a standard BNC socket that allows an external connection to a pulse generator or control system and gives the user control of the power supply output current. A logic 1 (5-15V) input will inhibit the supply (shuts off the output current) and a logic 0 (ground or open) allows the supply to operate.

5.15.8. **Interlock Terminal strip (Ref 8)**

Provides an external dry contact connection for the customer to allow interlock functions to be controlled. The interlock terminals should be connected to any safety interlock circuitry in the power supply installation. When the interlock is open the AC line contactor disconnects the AC line from the power circuitry. The power supply is shipped with a factory installed shorting link across the interlock terminals.

NOTE

The Interlock terminals are chassis referenced 24VAC circuits and must never be connected to ground.

5.15.9. **AC Input Terminal (Ref 9)**

Main AC input power terminal block see section 4.4 for further details. For 200-240VAC connect three phases and ground. For 380-440VAC option connect three phases, Neutral and Ground. AC input is not phase rotation sensitive.

5.16. Rear Panel Layout (S Models)

The 802S rear panel is similar to the 802L except these is no SLAVE or INHIBIT BNC connector. If a number of units are to be connected in parallel, a daisy chain type ribbon cable should be used to connect the supplies together. See section 6.4 for more details.

Note:

The numbers in Figure 9 refer to Table 5.

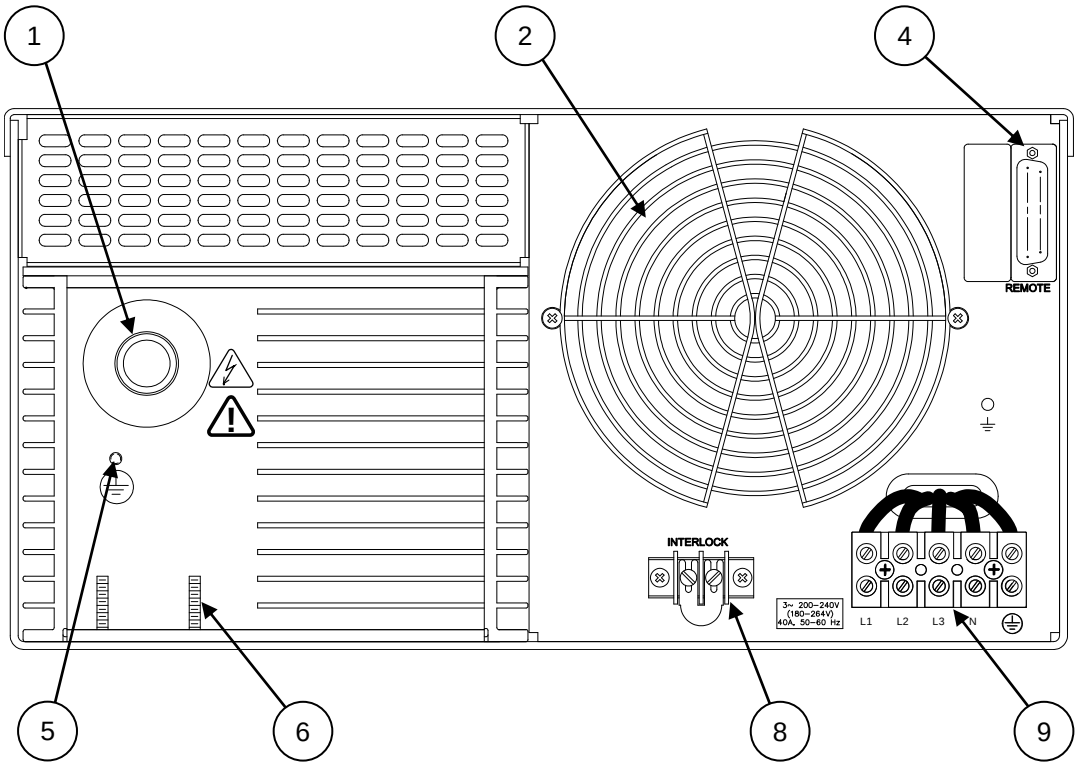

Figure 9 802S Rear Panel

5.17. Rear Panel Layout (OEM Models)

The 802OEM rear panel is similar to the 802S except there is no interlock terminal, unless the CT option is installed. If a number of units are to be connected in parallel, a daisy chain type ribbon cable should be used to connect the supplies together. See section 6.4 for more details.

Note:

The numbers in Figure 10 refer to Table 5.

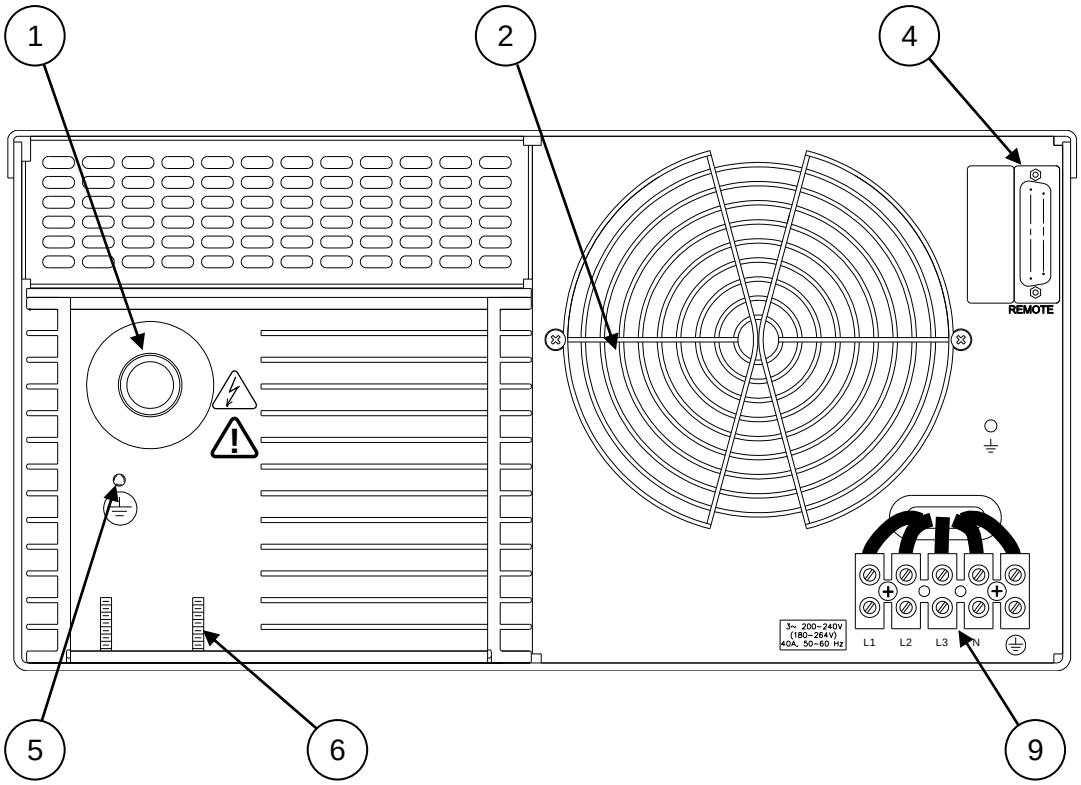

Figure 10 802OEM Rear Panel

5.18. REMOTE CONTROL CONNECTOR PIN DIAGRAM

Figure 11 shows a summary of the remote control signals on the connector labeled 4 in Figure 5 through 8. The connector is a 25-pin sub D-type receptacle (female).

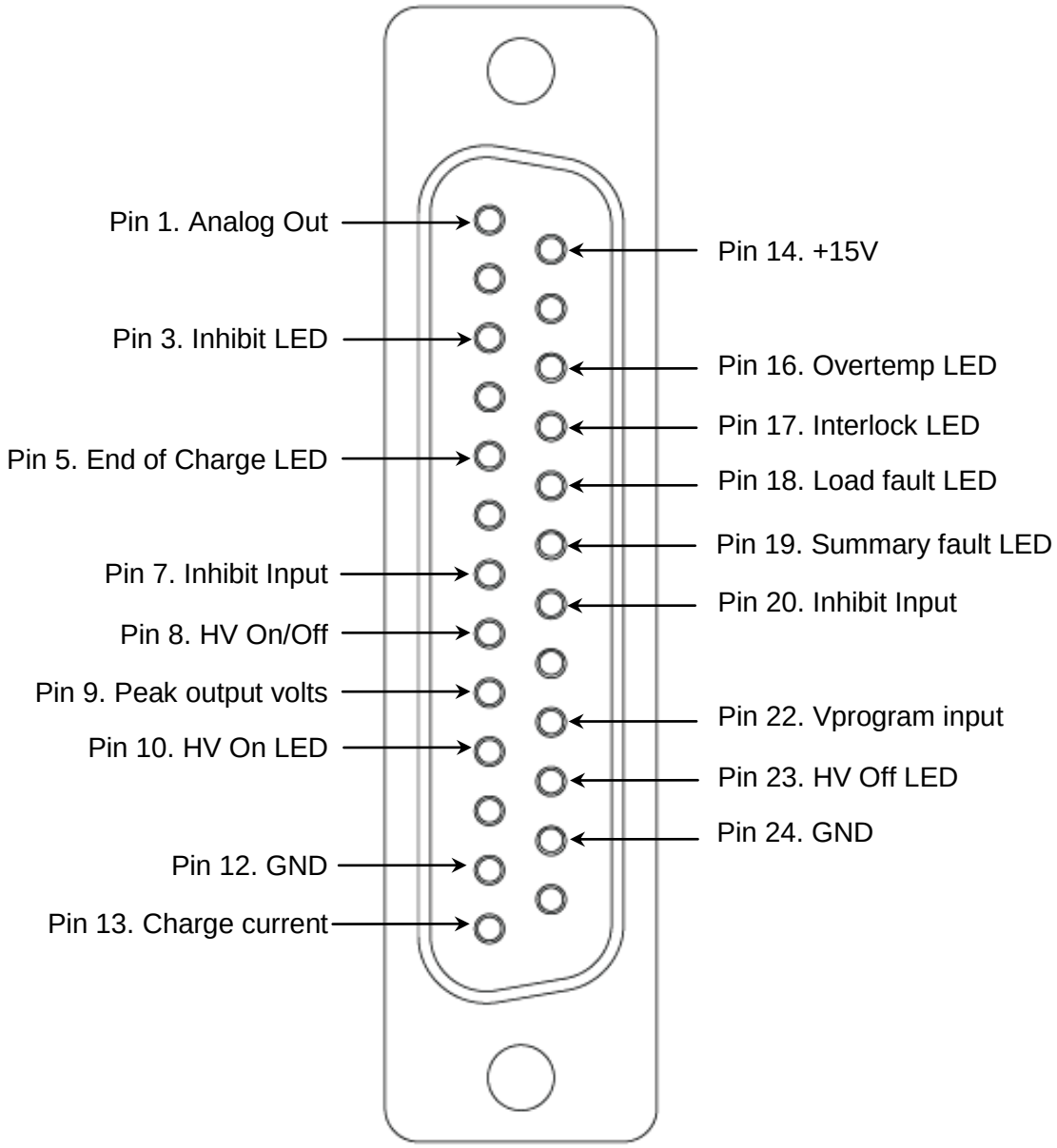

Figure 11 Remote Interface Connector and Signals.

Notes

6. OPERATING INSTRUCTIONS

The 802 power supply is designed for operation in two modes. The first mode is local, where the power supply can be controlled from the front panel. Local operation is only possible with the L model supply. The second mode is remote, where control signals are passed via the 25pin remote connector. Remote operation is possible with all 802 model power supplies (L, S, or OEM).

6.1. Local Operation (802L only)

The model 802L has full front panel instrumentation and controls for use in laboratory, prototype or OEM systems. The front panel controls include power on/off, remote/local and HV on/off switches, output voltage adjust, view set switch, digital voltage and current meters, quick reference bar graphs and status indicators. An internal AC contactor is included which is controlled by the front panel power switch and the interlock terminals located on the rear of the unit. A BNC connector is provided on the rear panel for easily connecting a pulsed INHIBIT signal when operating from the front panel. The model 802L can be operated as a "master" unit in parallel with several model 802S or OEM "slave" units for increased output power. Refer to Section 6.4 "Paralleling Units".

Before operating the power supply ensure a load capacitor is connected between the power supply output, and the other terminal of the capacitor is connected to ground or the appropriate point in the load circuit. Failure to correctly connect a capacitive load prior to operating the power supply may result in damage.

HIGH VOLTAGES MAY POTENTIALLY EXIST FROM THIS POINT FORWARD.

The power supply should be connected to 3 phase AC power as described in section 4.4. The interlock terminals should be closed either with the supplied shorting link or by an isolated external dry contact. Follow the steps below;

1. Ensure the output voltage potentiometer is turned fully counter clockwise.
2. Turn on the AC power switch, the cooling fan should start and the front panel indicators will illuminate.
3. Turn the control key to the local position.
4. Push the View Set button and turn the Voltage potentiometer until the required load voltage is displayed. The view set mode stays active for approximately 3 seconds before the voltage display reverts to the output voltage mode.
5. Push the HV ON button. The load will charge to the preset voltage and once this voltage is reached the End of Charge LED will illuminate. The supply will maintain this voltage until the HV OFF button is pushed, or the load capacitor is discharged via the HV switch in the load circuit.

After the load has been discharged the external Inhibit function can be used to shut down the power supply output current which aids in the HV switch recovery. Application of an inhibit signal will typically shut down the output current in approximately 15microseconds.

To turn OFF the power supply depress the HV OFF button, or use the Inhibit input to shut off the output current but leave the supply in the HV ON condition. Opening the interlock terminals will also cause the power supply to turn off. In this case the unit can only be turned back on after the interlock has been closed and the HV ON button depressed followed by the HV OFF button to RESET the fault. Any other fault occurring in the internal protection

circuitry will interrupt the power supply's operation causing it to turn OFF. For a full explanation of each control and indicator refer to Section 5.

6.2. Remote Operation (All models)

All 802 models are easily controlled through the 25 pin sub D-type remote interface connector located on the rear panel. The minimum required signals for remote control operation are; HV ON/OFF, Vprogram and GND. The remaining signals are provided for status monitoring and fault diagnosis, or more sophisticated control methodologies. The function each signal is shown in Table 6, with a schematic showing a suggested remote interface circuit shown in Figure 12.

Pin	Signal Name	I/O	Description
1	Analog Out	O	0-10V (±1%) Analog of output voltage waveform. Impedance 1kΩ. If the 5V option is installed the voltage level is 0-5V.
3	Inhibit LED	O	Open collector through 100Ω. Low impedance when INHIBIT signal applied.
5	End of Charge LED	O	Open collector through 100Ω. Low impedance when power supply reaches End of Charge.
7	Inhibit Input	I	5-15V Inhibits unit, open or ground allows operation. Input impedance >10kΩ. Note use either INHIBIT or $\overline{\text{INHIBIT}}$, never both signals. Do not use the INHIBIT BNC as well as the INHIBIT signal.
8	HV ON/OFF	I	15V=On, ground or open =Off. Also used to reset latching faults by cycling from On to Off. Input impedance >1MΩ. If the EN option is installed 15V=Off, Ground or open = On
9	Peak output volts	O	0-10V (±1%) Peak detector of output voltage waveform. Can be used to drive a meter displaying peak charging voltage. Impedance 10kΩ. If the 5V option is installed the voltage level is 0-5V.
10	HV ON LED	O	Open collector through 100Ω. Low impedance when HV output is enabled.
12	GND		Control circuit return. Also chassis/earth ground.
13	Charge current	O	Uncalibrated Analog of output current waveform. Impedance 10kΩ
14	+15V	O	+15V through 100Ω
16	Overtemp LED	O	Open collector through 100Ω. Low impedance when inverter overtemperature condition occurs.
17	Interlock LED	O	Open collector through 100Ω. Low impedance when external interlock circuit is open.
18	Load fault LED	O	Open collector through 100Ω. Low impedance when load fault condition occurs. Load fault is normally a non-latching fault and will self-reset after approximately 500ms, unless caused by an output overvoltage where the supply will latch off. For models with the LP option, an external RESET cycle is required to restart the unit.
19	Summary Fault LED	O	Open collector through 100Ω. Low impedance indicated a summary fault condition. Summary fault is a logical OR of Overvoltage, Overtemp, AC Line, and Open Interlock conditions.
20	$\overline{\text{Inhibit Input}}$	I	0V Inhibits unit, 15V or open allows operation. Input impedance >10 kΩ. Note use either INHIBIT or $\overline{\text{INHIBIT}}$, never both signals. Do not use the INHIBIT BNC as well as the INHIBIT signal.
22	Vprogram	I	0-10V = 0-100% of rated output voltage. Input impedance >1MΩ. If the 5V option is installed the voltage level is 0-5V.
23	HV OFF LED	O	Open collector through 100Ω. Low impedance when HV output is off/disabled.
24	GND		Control circuit return. Also chassis/earth ground.

Table 6 802 Remote Interface Description

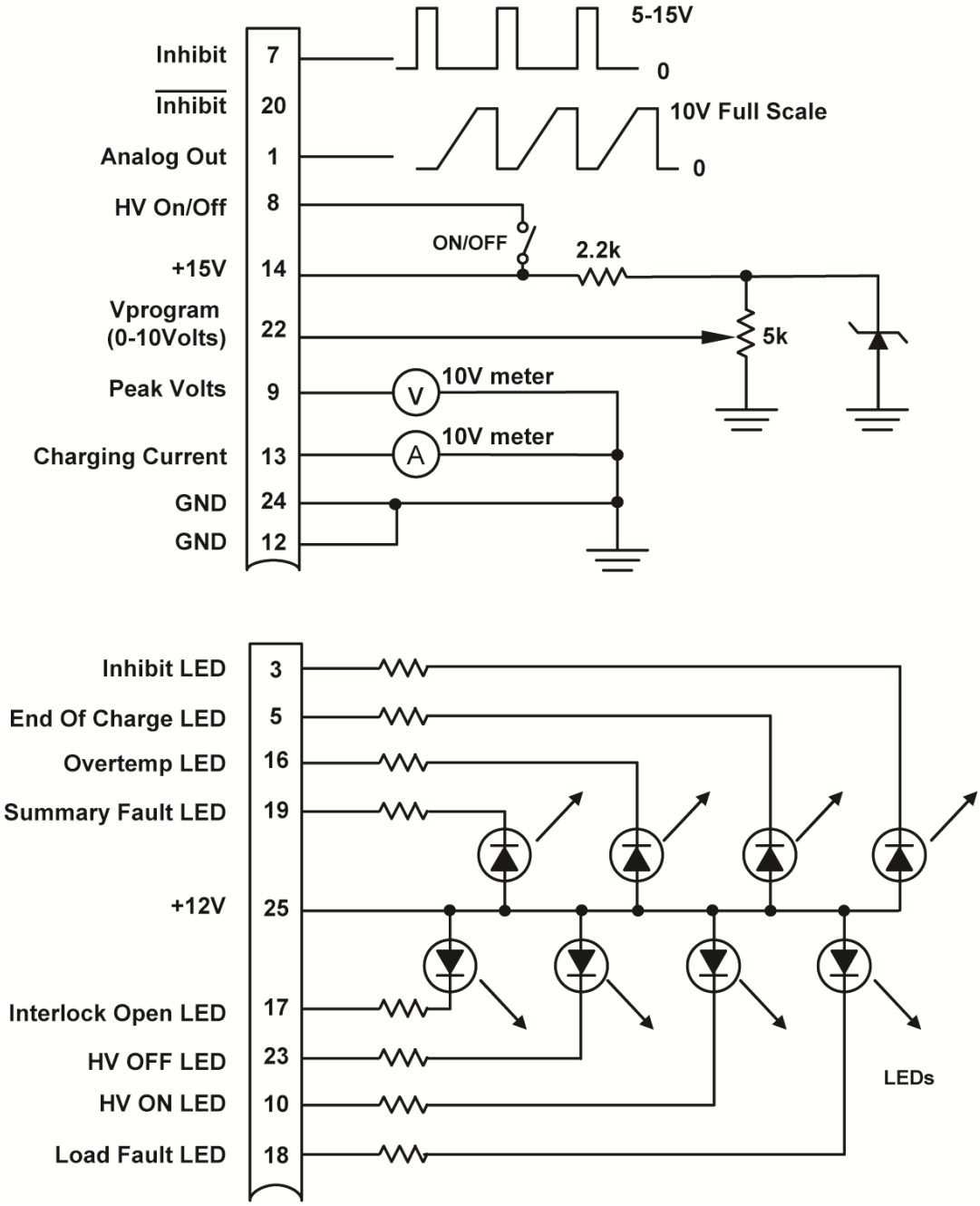

Figure 12 Suggested external remote interface circuit.

A detailed description of each remote control signal is given in the following sub-sections.

6.2.1. Analog Out

Pin 1. Analog of output voltage waveform as measured at the output terminals of the power supply. Signal is 0-10V +/-1% (0-5V if 5V option installed).

6.2.2. Inhibit LED

Pin 3. Open collector Active Low output indicating presence of an external Inhibit signal. Max rated voltage - 60V, 100Ω series resistance.

6.2.3. End Of Charge (EOC) LED

Pin 5. Open collector Active Low output indicating power supply output voltage has reached the programmed voltage or end of charge cycle. Max rated voltage - 60V, 100Ω series resistance.

6.2.4. Inhibit Input

Pin 7. 5-15V Inhibits unit (turns off output current), open or ground allows operation. Input impedance >10kΩ. Signal can be used to aid load switch recovery.

6.2.5. HV ON/OFF

Pin 8. +15V = HV ON, ground or open = HV OFF. Also used to reset latching faults by cycling from ON to OFF. Input impedance > 1MΩ. If EN option is installed +15V = OFF, Open or Ground = ON.

6.2.6. Peak Output Volts

Pin 9. Peak detector of Analog output voltage waveform. Can be used to drive a meter displaying peak charging voltage. Signal is 0-10V +/-1% (0-5V if 5V option installed).

6.2.7. HV ON LED

Pin 10. Open collector Active Low output indicating power supply output is ON/Enabled. Max rated voltage - 60V, 100Ω series resistance. If the HV ON and HV OFF signals are both active at the same time, this indicates a Summary Fault.

6.2.8. Ground

Pin 12. Control circuit return. Also chassis/earth ground.

6.2.9. Charge current

Pin 13. Analog of output current waveform. Signal is not calibrated.

6.2.10. +15V Output

Pin 14. +15V through 100Ω, maximum current is 20mA.

6.2.11. Overtemp LED

Pin 16. Open collector Active Low output indicating an inverter overtemperature condition has occurred. Once temperature has returned to normal levels this fault will clear, but the power supply will not restart without a Reset Cycle. Max rated voltage - 60V, 100Ω series resistance.

6.2.12. Interlock LED

Pin 17. Open collector Active Low output indicating the external interlock circuit is open. Max rated voltage - 60V, 100Ω series resistance.

6.2.13. Load Fault LED

Pin 18. Open collector Active Low output indicating a load fault condition. Load fault is a non-latching fault and will self-reset after approximately 500ms (for models without LP option). Load fault is caused by an output overvoltage condition (110% of rated voltage) or an output short circuit/large capacitor (load charges for 500ms without reaching programmed voltage). Max rated voltage - 60V, 100Ω series resistance.

6.2.14. Summary Fault LED

Pin 19. Open collector Active Low output indicating a summary fault condition. Summary fault is a logical OR of Overvoltage, Overtemp, AC Line, and Open Interlock conditions. Summary Fault is also indicated by both HV ON and HV OFF LEDs/indicators being illuminated at the same time. Max rated voltage - 60V, 100Ω series resistance.

6.2.15. Not Inhibit Input

Pin 20. Logical Inverse of Inhibit input (Pin 7), 0V Inhibits unit, 15V or open allows operation. User should control supply with either the Inhibit or Not Inhibit signal, both signals should not be used together. Input impedance >10kΩ.

6.2.16. Vprogram

Pin 22. 0-10V Analog Input = 0-100% of rated output voltage (0-5V if 5V option is installed). Input impedance >1MΩ.

6.2.17. HV Off LED

Pin 23. Open collector Active Low output indicating HV output is off/disabled. Max rated voltage - 60V, 100Ω series resistance.

6.2.18. Ground

Pin 24. Control circuit return. Also chassis/earth ground.

6.3. Remote Control Sequence

Note

The logic levels in the description below are for a supply without EN option. If EN is installed the logic levels for HV ON/OFF should be reversed.

Before operating either an 802L, S, or OEM in remote mode it must first be connected to a master supply, or an appropriate external control system. To operate a model 802L in remote mode the front panel keyswitch must be in the REMOTE position.

It is suggested that the INHIBIT signal is used in addition to the HV ON/OFF signal to control the output current of the power supply during the normal charge/discharge cycle. The INHIBIT signal should be asserted (Pin 7=5-15V) prior to activating the HV ON signal. Do not connect the INHIBIT BNC and the Inhibit signal on the remote interface, only the remote interface should be used in remote mode.

Once HV ON has been set (Pin 8=15V), then INHIBIT can be removed (Pin 7=0V), and the supply will begin charging the load. A few tens of microseconds before the load switch is triggered to close, the INHIBIT signal should be asserted to turn-off the output current, and aid in switch recovery.

After the load is discharged, and the HV switch has recovered to an insulating state, INHIBIT can be removed and the load re-charged. A typical set of remote control waveforms illustrating this sequence is shown in Figure 13.

There is no need to turn HV ON and OFF during the normal charge/discharge cycle, just use the INHIBIT signal to control the power supply. HV should be turned off (Pin 8=0V) as soon as the load circuit is no longer required to operate.

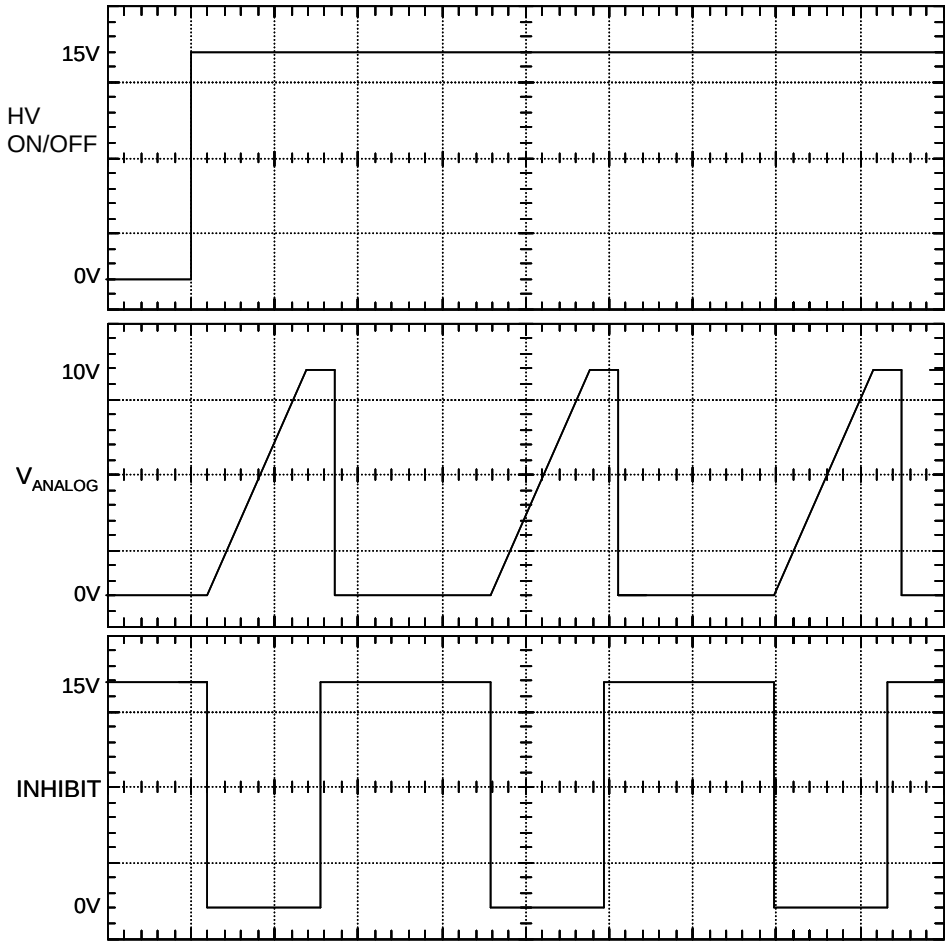

Figure 13 Typical remote Interface waveforms

The 802 supply can also be controlled without using the Inhibit signal (leaving Pin 7or 20 unconnected), and in this case the output current is immediately turned ON when the HV ON signal is activated assuming there are no faults present.

6.4. Parallel Operation

The 802 series capacitor charging power supplies are constant current sources, and can simply be connected in parallel for applications requiring increased power. Parallel supplies should have the same output voltage rating and programming options (if one unit has the 5V option, all others in parallel must have this option). Note that it is also possible to operate power supplies in parallel from different series (ie a model 802 in parallel with a model 402), but the user has to ensure the remote interface connections are compatible.

To operate more than one unit in parallel all that is required is a parallel control cable, and to connect the HV output cables together at the load. The output currents from the parallel supplies simply add together to increase the overall system current. Any model 802 supply, or any combination of units can be operated in parallel. If at least one model 802L is connected in a parallel system then the system can be operated without an external controller by using the 802L as a master supply in local mode.

If status, voltage, and current displays/measurements are required individually for each supply in a parallel system then the ‘daisy chain’ control cable is not appropriate, and each unit must be individually connected to a remote control system.

6.4.1. Parallel system comprising 802L supplies

If all of the parallel units are L model supplies then one unit should be operated as the master supply in either local or remote mode. The other parallel supplies can be connected to the SLAVE 25-pin D-sub connector on the master unit rear panel (refer to Figure 14). The SLAVE control cable can be a pin-to-pin ribbon or other cable that is ‘daisy chained’ to the REMOTE connector on each of the SLAVE supplies. Note: The master 802L supply in a parallel system only displays the status, voltage, and current output for that unit, not for the entire system. The slave supplies will also display the voltage and current only for that specific unit.

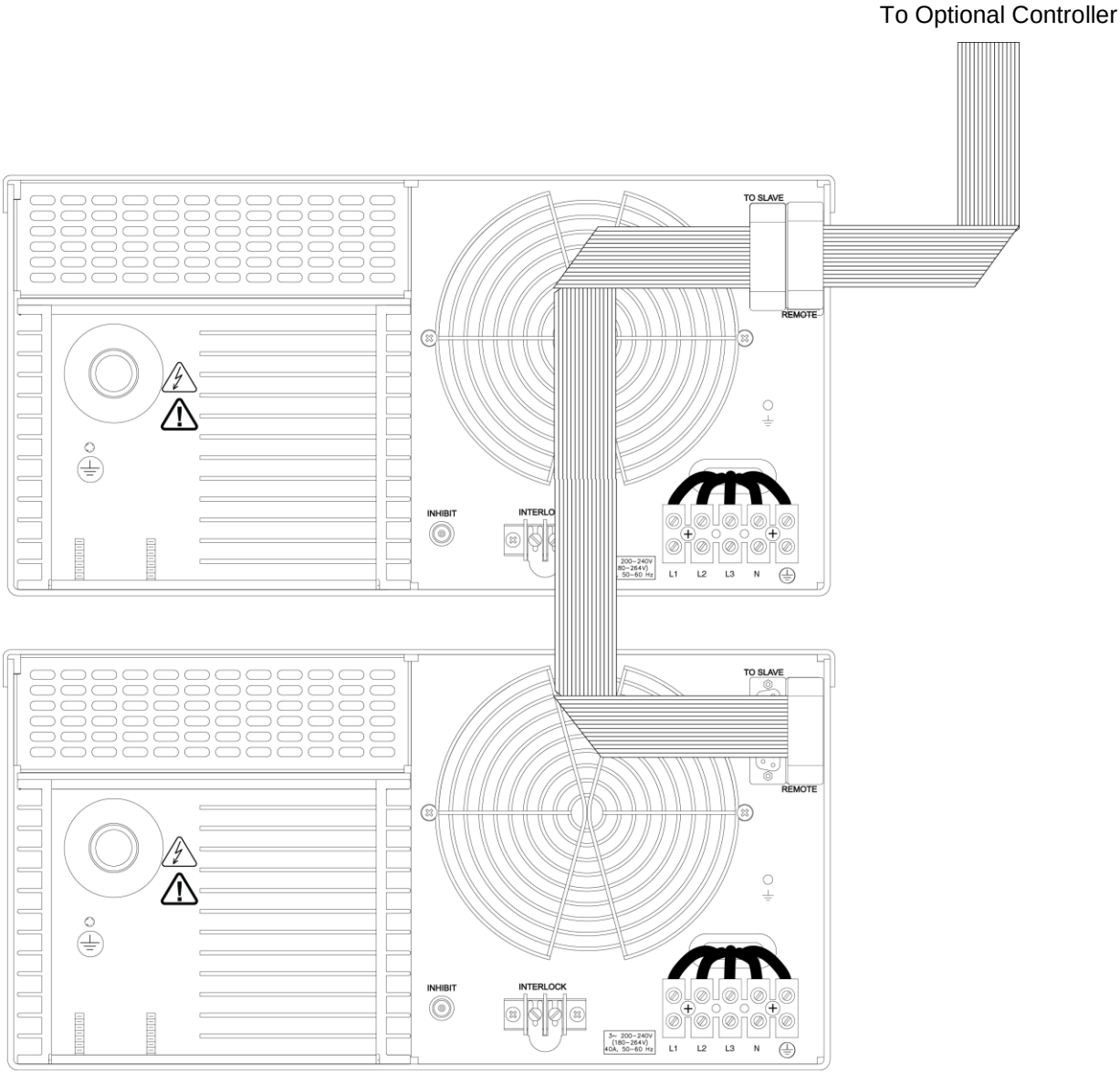

Figure 14 802L Parallel System Control Connections.

6.4.2. Parallel system comprising both 802L and 802S or OEM supplies

For a system comprising both 802L and S/OEM units, a single L model should be operated as a master in either local or remote mode. The other parallel supplies can be connected to the SLAVE 25-pin D-sub connector on the master unit rear panel (refer to Figure 15). The SLAVE control cable can be a pin-to-pin ribbon or other cable that is ‘daisy chained’ to the REMOTE connector on each of the SLAVE supplies.

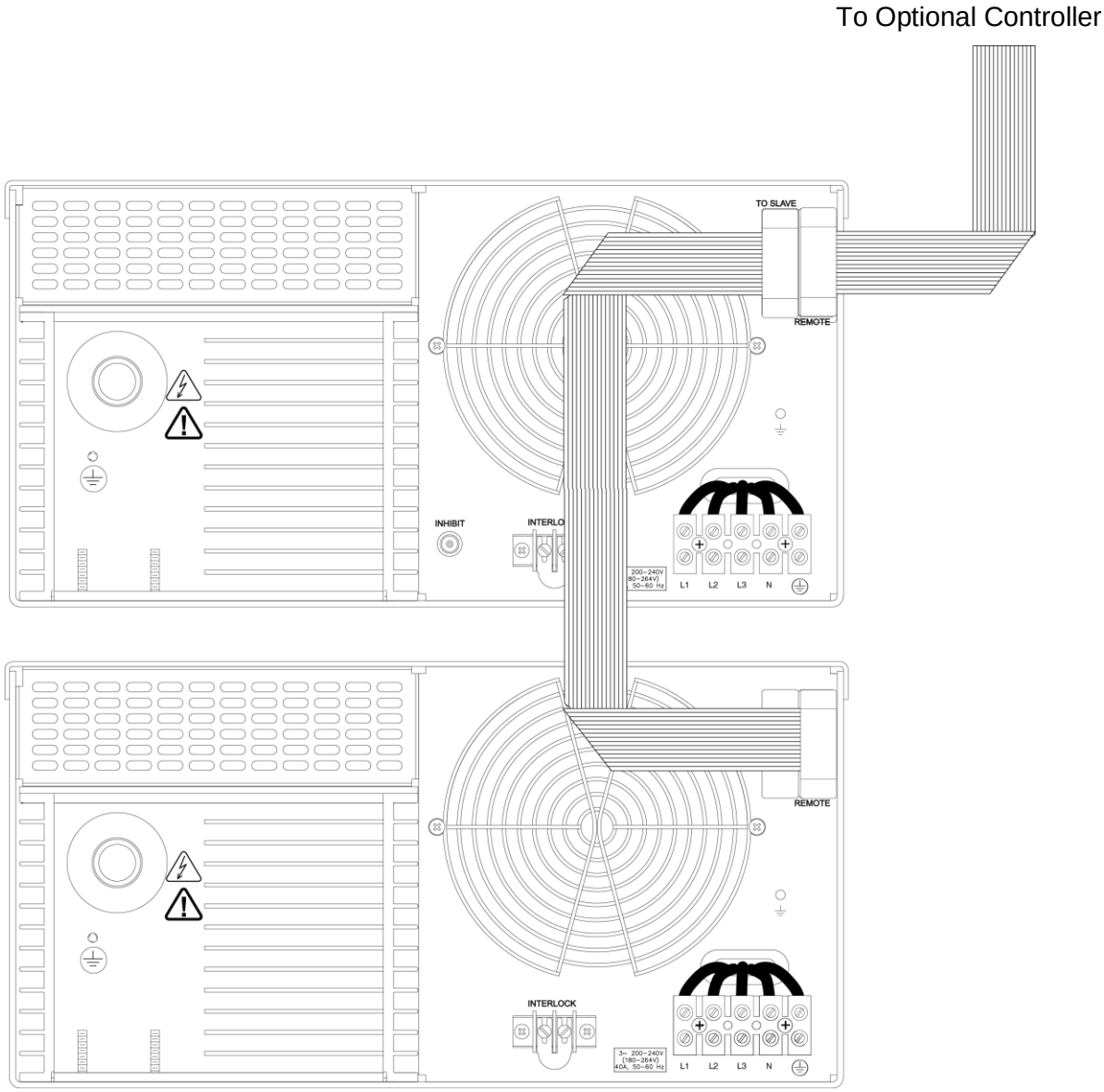

Figure 15 802L and 802S/OEM Parallel System control Connections.

6.4.3. Parallel system comprising 802S/OEM supplies

A system comprising only model 802S/OEM supplies must be operated from an external control system. The control system should be connected using a pin-to-pin ribbon or other cable that is ‘daisy chained’ to the REMOTE connector on each of the 802S/OEM supplies in the system. A sketch is shown in Figure 16.

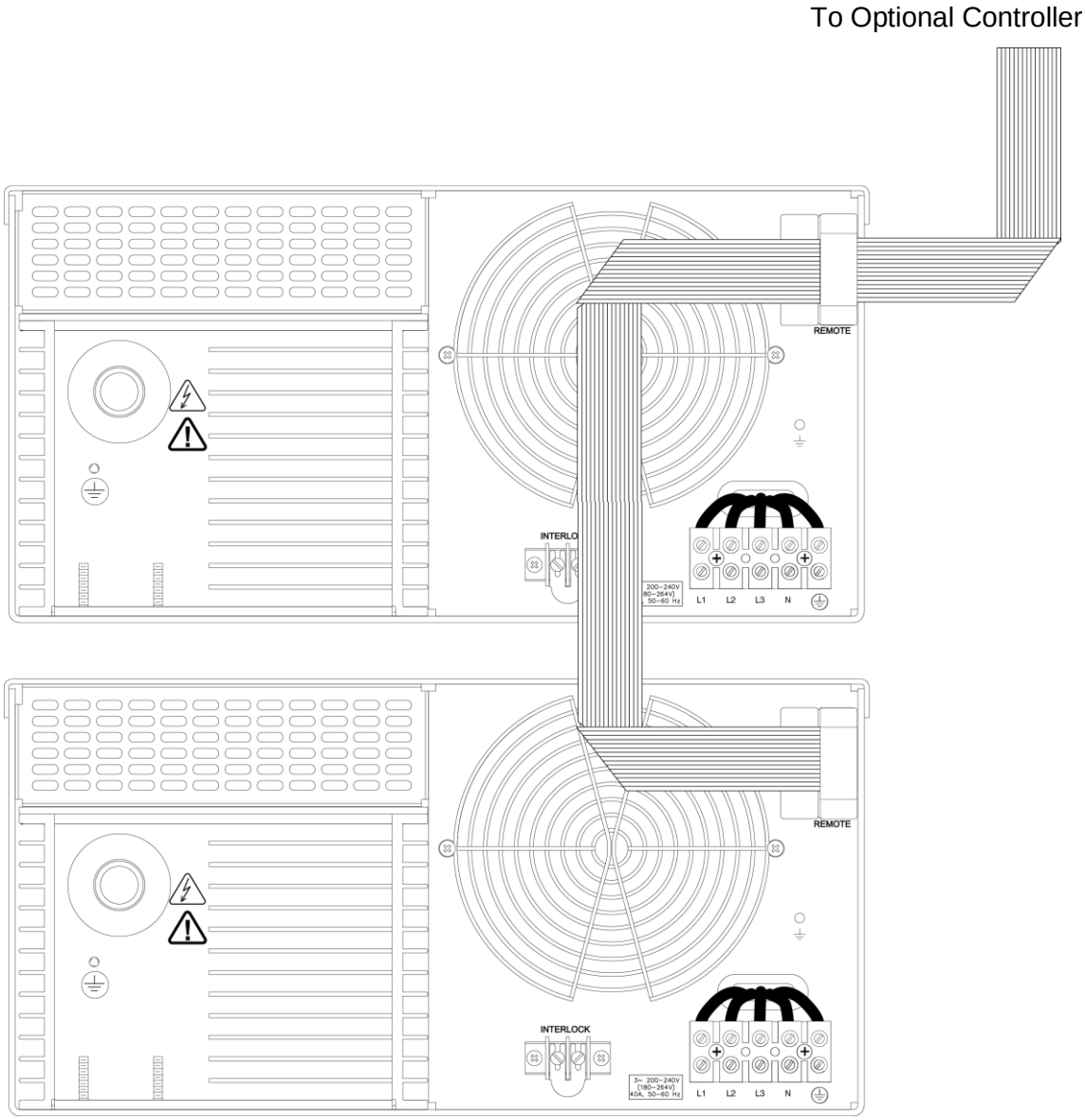

Figure 16 Parallel Operation Connections for 802S/OEM Supplies

Notes

7. APPLICATION NOTES

The 802 series power supplies are high voltage power sources and great care should be taken when connecting and operating these units. In order to aid installation and system design, a number of application notes have been produced to support the design engineer with certain load circuit component rating and selection. The latest versions of these application notes are available for download at the TDK-Lambda High Power web site (http://www.us.tdk-lambda.com/hp/product_html/high_volt.htm).

The following App Notes were available at the time this manual was produced. These documents are continually being improved and expanded, so always check for the latest revision on-line.

APP Note 500: Calculating Capacitor Charge Time

APP Note 502: Calculating AC Line Currents

APP Note 505: Charging units as Continuous Output DC Supplies

APP Note 507: Charging Large Load Capacitors

APP Note 509: What is Regulation and Repeatability?

APP Note 513: Power Factor Correction

APP Note 517: Protection Against Voltage Reversal

If there are any other application issues or questions that are not covered in these Application Notes, or elsewhere in this manual, please do not hesitate to contact the factory and our team of experienced HV application engineers.

Contact the Factory – We are here to help!

Tel: +1 732 922 9300 x229

Fax: +1 732 922 1441

THIS IS A COMPUTER GENERATED DWG.
NO MANUAL REVISIONS ARE PERMITTED.

APPLICATION			LTR	E.C.O. NO.	BY	APP.
USED ON	NEXT ASSY.	QTY.	00	RELEASE ECO 304 10/90	JT	
802-L	003-0274		01	ECO #320 4/91	JT	
			A	TG 3 REL. 10/20/95	CJS	
			B	ECO #16288 6/18/97	CJS	

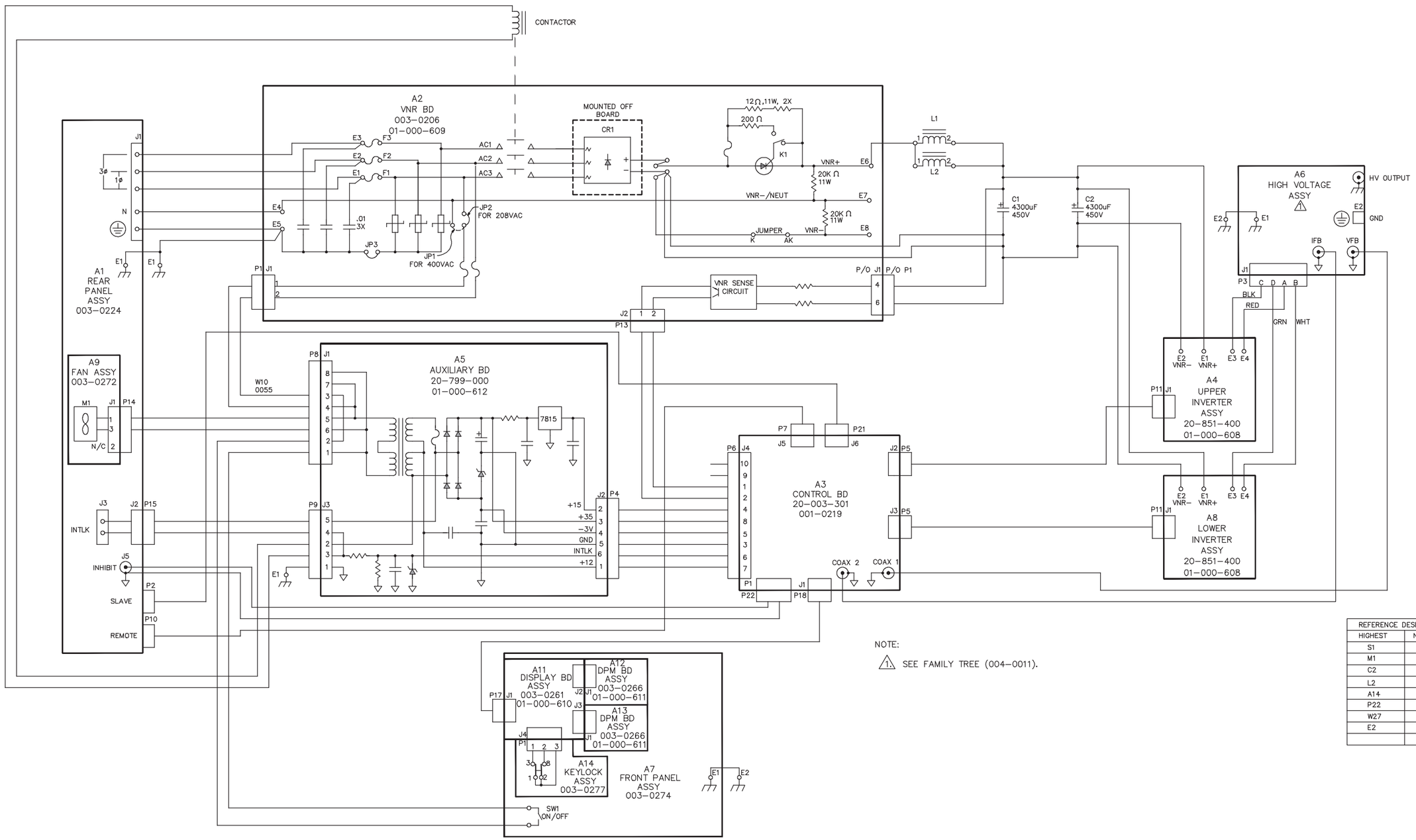

NOTE:

1. SEE FAMILY TREE (004-0011).

REFERENCE DESIGNATIONS	
HIGHEST	NOT USED
S1	
M1	
C2	
L2	
A14	
P22	
W27	W24
E2	

SHEET 1 OF 1

MTL:	TOL: .X = ± .02" .XX = ± .01" .XXX = ± .005" FRAC. = ± 1/64" ANGLES = ± 1/2°	REL. TO MFG. PRJ. ENG. DATE: / MFG: DATE: / DOC. REL. DATE:	ENG. CTL. DWN: TURCOTTE DATE: 4/90 / CHK: B.WEAVER DATE: 10/90 / APP: DATE: 6/9/95	ELECTRONIC MEASUREMENTS, INC.
FIN:	P/L: 488			TITLE: SCHEMATIC 802L 208V AC SYSTEM
	SCALE: NONE	DO NOT SCALE DWG.	APP: DATE: 6/9/95	DWG. NO. 001-0108 REV. B

THIS IS A COMPUTER GENERATED DWG.
NO MANUAL REVISIONS ARE PERMITTED.

APPLICATION			LTR	E.C.O. NO.	BY	APP.
USED ON	NEXT ASSY.	QTY.	00	REL. ECO# 304 10/90	JT	
003-0234	802-S		01	ECO# 320 4/91	JT	
			A	ECO #16288 6/16/98	CJS	

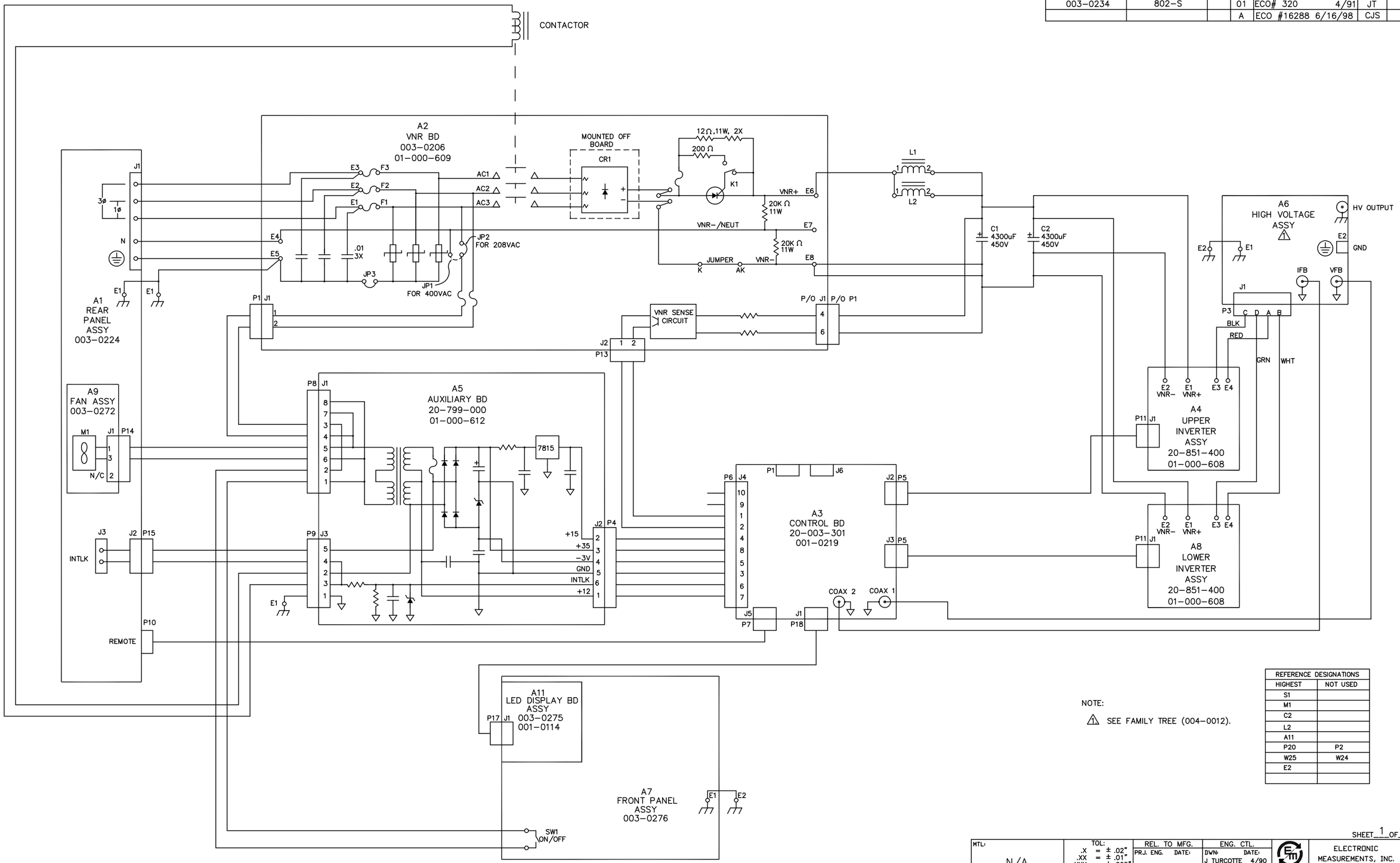

NOTE:

1. SEE FAMILY TREE (004-0012).

REFERENCE DESIGNATIONS	
HIGHEST	NOT USED
S1	
M1	
C2	
L2	
A11	
P20	P2
W25	W24
E2	

SHEET 1 OF 1

MTL: N/A	TOL: .X = ± .02" .XX = ± .01" .XXX = ± .005" FRAC. = ± 1/64" ANGLES = ± 1/2°	REL. TO MFG. PRJ. ENG. DATE: MFG: DATE:	ENG. CTL. DWN: J TURCOTTE DATE: 4/90 CHK: B.WEAVER DATE: 10/90	ELECTRONIC MEASUREMENTS, INC.
FIN: N/A	P/L: 488	DOC. REL. DATE:	ENG: DATE:	TITLE: SCHEMATIC 802S 208V AC SYSTEM
	SCALE: N/A	DO NOT SCALE DWG.	APP: DATE:	DWG. NO. 001-0112 REV. A

THIS IS A COMPUTER GENERATED DWG.
NO MANUAL REVISIONS ARE PERMITTED.

APPLICATION			LTR	E.C.O. NO.	BY	APP.
USED ON	NEXT ASSY.	QTY.	00	REL. ECO #301 7/90	JT	
802-OEM LV AC	003-0230		01	ECO #320 7/90	JT	
			A	TG 3 REL. 8/24/94	CJS	

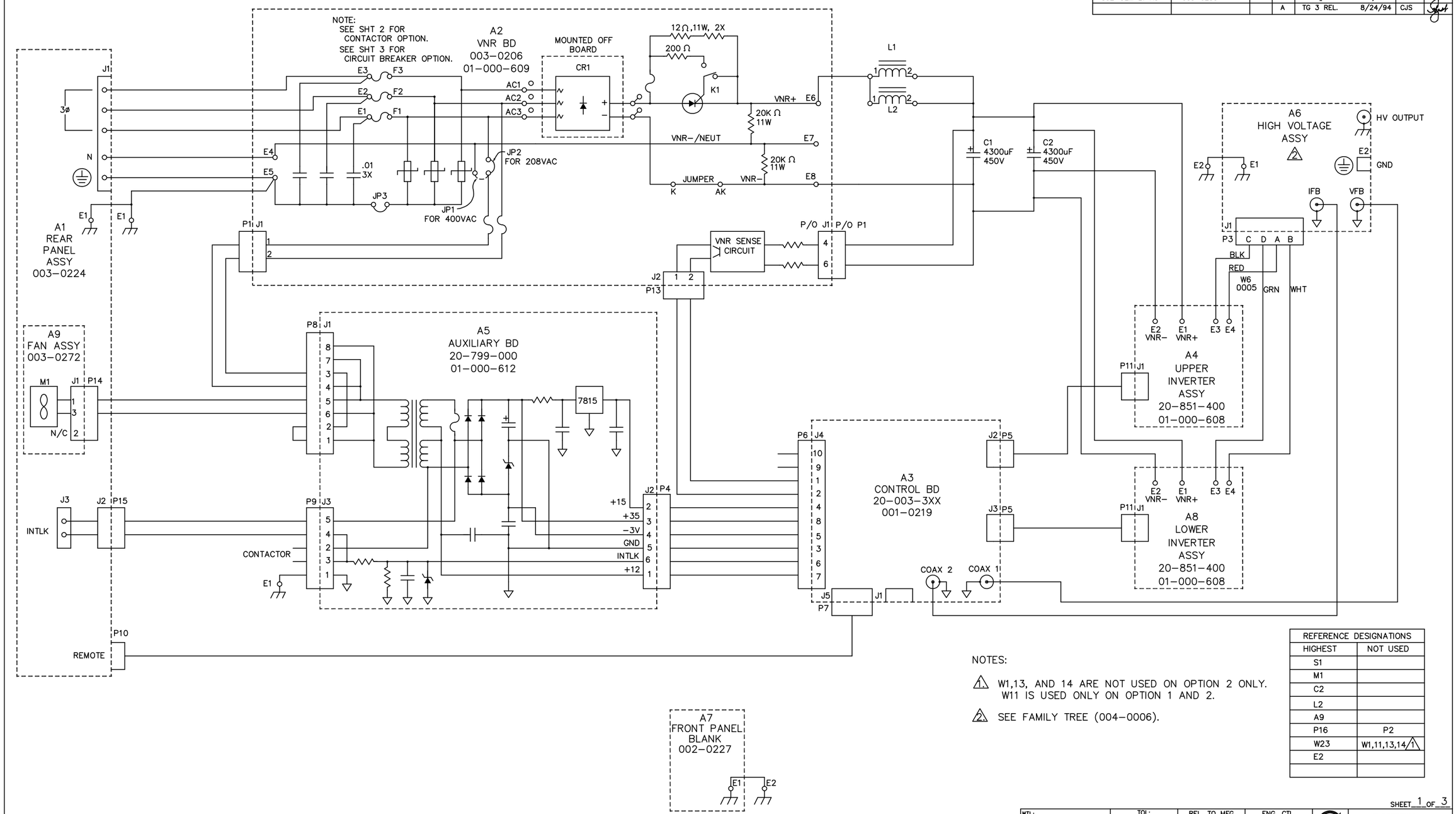

NOTES:

1. W1,13, AND 14 ARE NOT USED ON OPTION 2 ONLY. W11 IS USED ONLY ON OPTION 1 AND 2.
2. SEE FAMILY TREE (004-0006).

REFERENCE DESIGNATIONS	
HIGHEST	NOT USED
S1	
M1	
C2	
L2	
A9	
P16	P2
W23	W1,11,13,14 (1)
E2	

SHEET 1 OF 3

MTL:	TOL: .X = ± .02" .XX = ± .01" .XXX = ± .005" FRAC. = ± 1/64" ANGLES = ± 1/2°	REL. TO MFG. PRJ. ENG. DATE: MFG: DATE:	ENG. CTL. DWN: TURCOTTE DATE: 4/90 CHK: B.WEAVER DATE: 10/90	ELECTRONIC MEASUREMENTS, INC.
FIN:	P/L: 487 SCALE: N/A	DOC. REL. DATE: 10/13/95 DO NOT SCALE DWG.	ENG. DATE: 6/17/94 APP: DATE: 6/17/94	TITLE: SCHEMATIC 802-OEM 208V AC SYSTEM DWG. NO. 001-0103 REV. A

THIS IS A COMPUTER GENERATED DWG.
NO MANUAL REVISIONS ARE PERMITTED.

APPLICATION			LTR	E.C.O. NO.	BY	APP.
USED ON	NEXT ASSY.	QTY.	00	RELEASE ECO #301 7/90	JT	
802-OEM LV AC	003-0230		01	ECO #320 7/90	JT	
			A	TG 3 RELEASE 8/24/94	CJS	

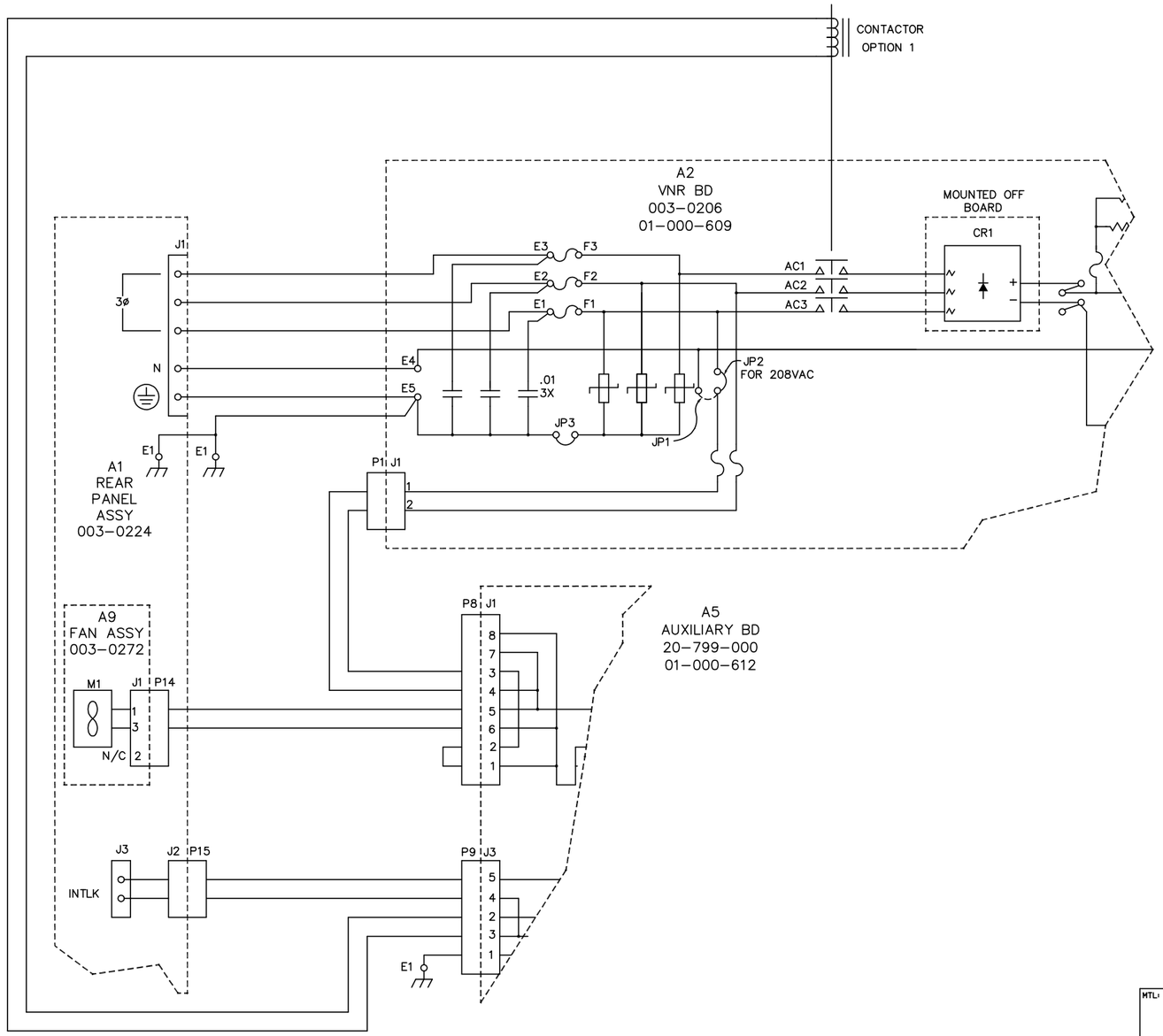

OPTION 1

802 OEM VERSION WITH CONTACTOR

SHEET 2 OF 3

MTL:	TOL: .X = ± .02" .XX = ± .01" .XXX = ± .005" FRAC. = ± 1/64" ANGLES = ± 1/2°	REL. TO MFG. PRJ. ENG. DATE: MFG: DATE:	ENG. CTL. DWN: TURCOTTE DATE: 4/90 CHK: DATE: 6/17/94	ELECTRONIC MEASUREMENTS, INC.
FIN:	P/L: 487	DOC. REL. DATE: 10/13/95	ENG: DATE: 6/17/94	TITLE: SCHEMATIC 802-OEM 208V AC SYSTEM
	SCALE: N/A	DO NOT SCALE DWG.	APP: DATE: 6/17/94	DWG. NO. 001-0103 REV. A

THIS IS A COMPUTER GENERATED DWG.
NO MANUAL REVISIONS ARE PERMITTED.

APPLICATION			LTR	E.C.O. NO.	BY	APP.
USED ON	NEXT ASSY.	QTY.	00	RELEASE ECO #301 7/90	JT	
802-OEM LV AC	003-0230		01	ECO #320 7/90	JT	
			A	TG 3 REL. 8/24/94	CJS	

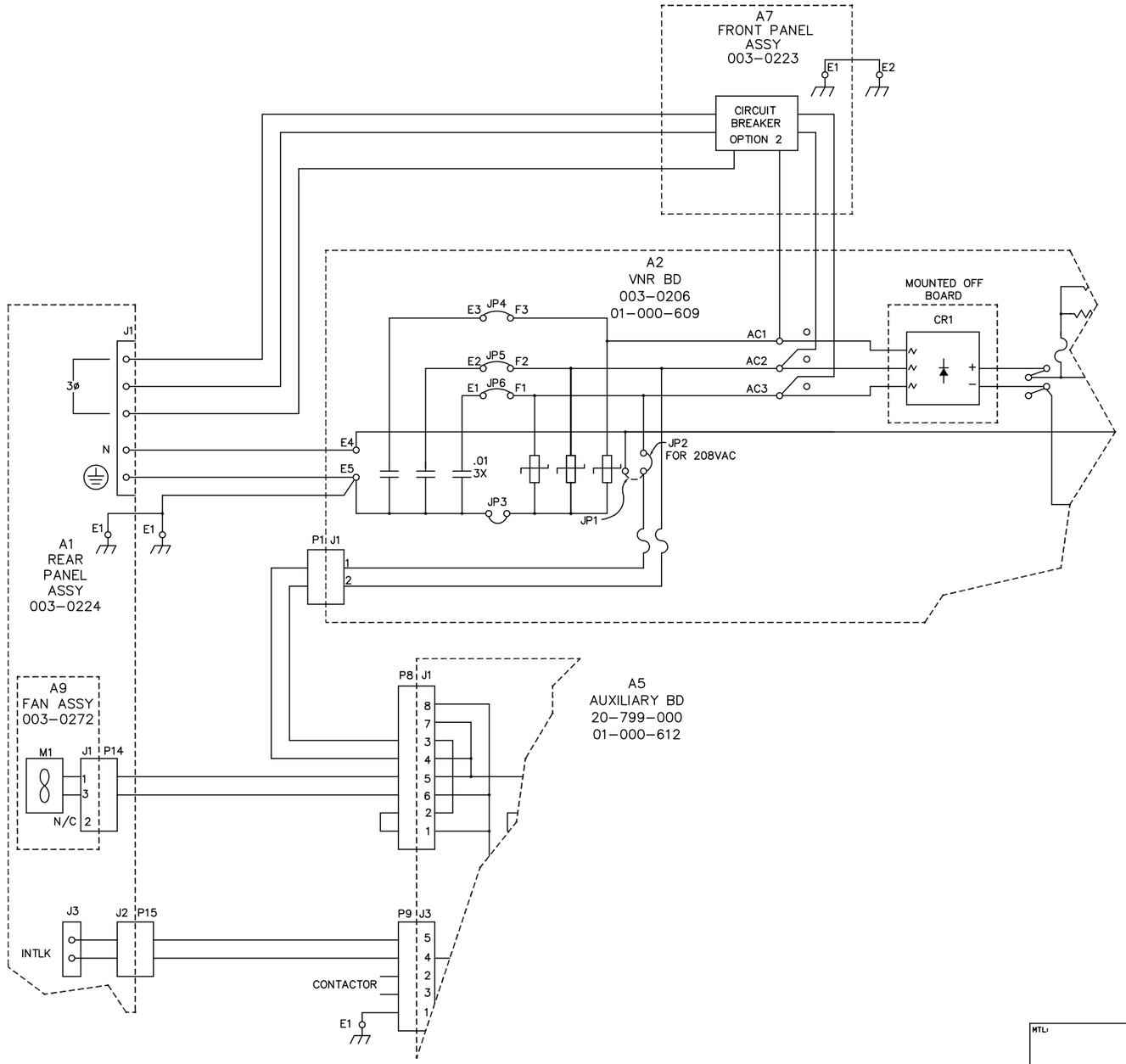

OPTION 2

802 OEM VERSION WITH CIRCUIT BREAKER
AND WITHOUT FUSES.

SHEET 3 OF 3

MTL:	TOL: .X = ± .02" .XX = ± .01" .XXX = ± .005" FRAC. = ± 1/64" ANGLES = ± 1/2°	REL. TO MFG. PRJ. ENG. DATE:	ENG. CTL. DWN: TURCOTTE DATE: 4/90	ELECTRONIC MEASUREMENTS, INC.	
		MFG: DATE:	CHK: DATE: 6/17/94	TITLE: SCHEMATIC 802-OEM 208V AC SYSTEM	
FIN:	P/L: 487	DOC. REL. DATE: 10/13/95	ENG: DATE: 6/17/94		
	SCALE: N/A	DO NOT SCALE DWG.	APP: DATE: 6/17/94	DWG. NO. 001-0103	REV. A

THIS IS A COMPUTER GENERATED DWG.
NO MANUAL REVISIONS ARE PERMITTED.

APPLICATION			LTR	E.C.O. NO.	BY	APP.
USED ON	NEXT ASSY.	QTY.	1	INT REL 2/9/96		
802-L	FINAL	REF	A	TG REL 6/19/96	CJS	

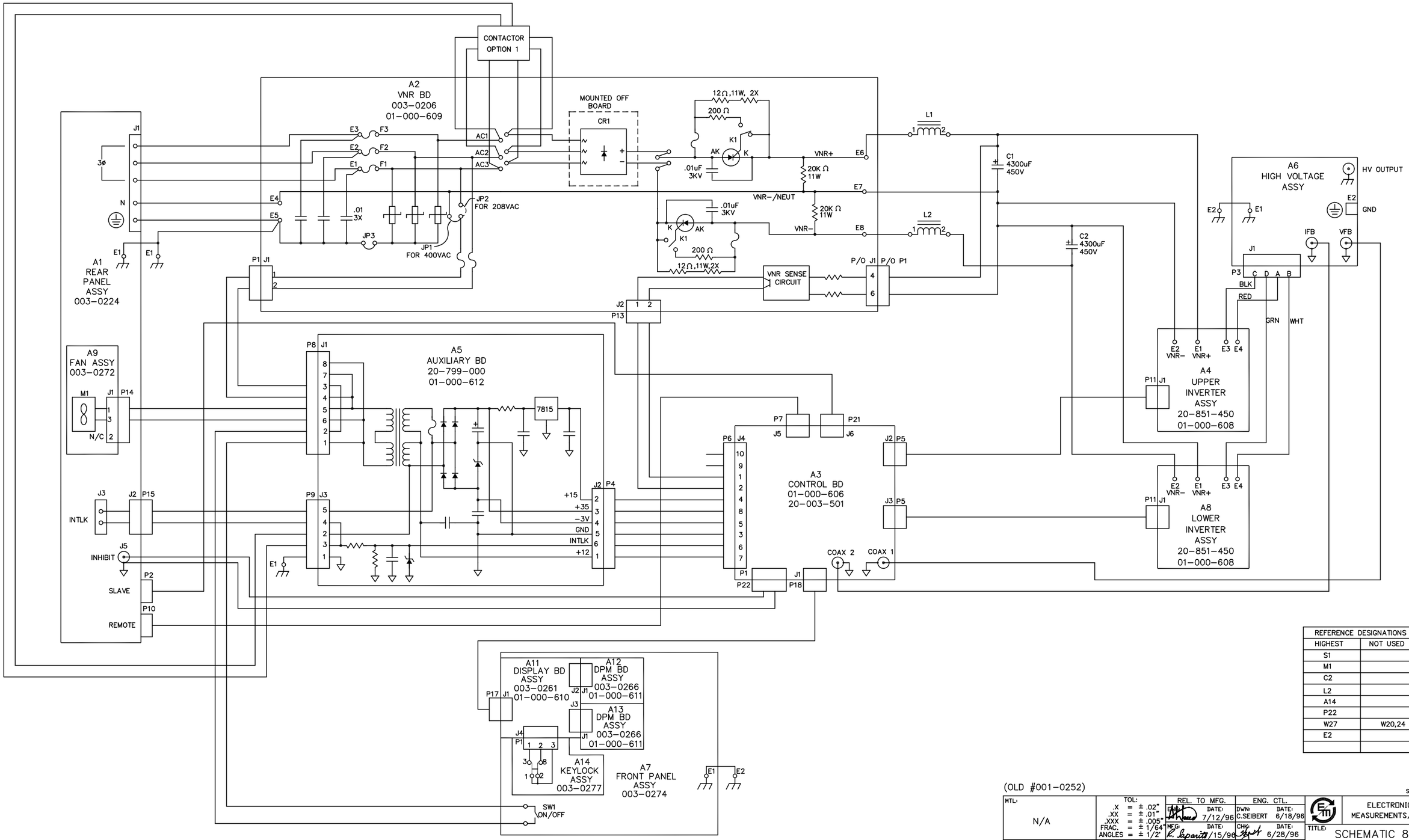

REFERENCE DESIGNATIONS	
HIGHEST	NOT USED
S1	
M1	
C2	
L2	
A14	
P22	
W27	W20,24
E2	

(OLD #001-0252)

SHEET 1 OF 1

MTL: N/A	TOL: .X = ± .02" .XX = ± .01" .XXX = ± .005" FRAC. = ± 1/64" ANGLES = ± 1/2°	REL. TO MFG. DRN: DATE: 7/12/96	ENG. CTL. DWN: C.SEIBERT DATE: 6/18/96	ELECTRONIC MEASUREMENTS, INC.
		MFG: DATE: 7/15/96	CHK: DATE: 6/28/96	TITLE: SCHEMATIC 802L 400VAC SYSTEM
FIN: N/A	P/L: 488	DOC. REL. DATE: 6/28/96	APP: DATE: 7/12/96	
DO NOT SCALE DWG.	SCALE: NONE	CHK: DATE:	APP: DATE: 6/28/96	DWG. NO. 01-488-016 REV. A

THIS IS A COMPUTER GENERATED DWG.
NO MANUAL REVISIONS ARE PERMITTED.

APPLICATION			LTR	E.C.O. NO.	BY	APP.
USED ON	NEXT ASSY.	QTY.	00	REL ECO #320 4/91	JT	
802S	003–0350		1PB	REV.01 PENDING 4/92	JT	
			A	ECO #16288 6/16/97	CJS	

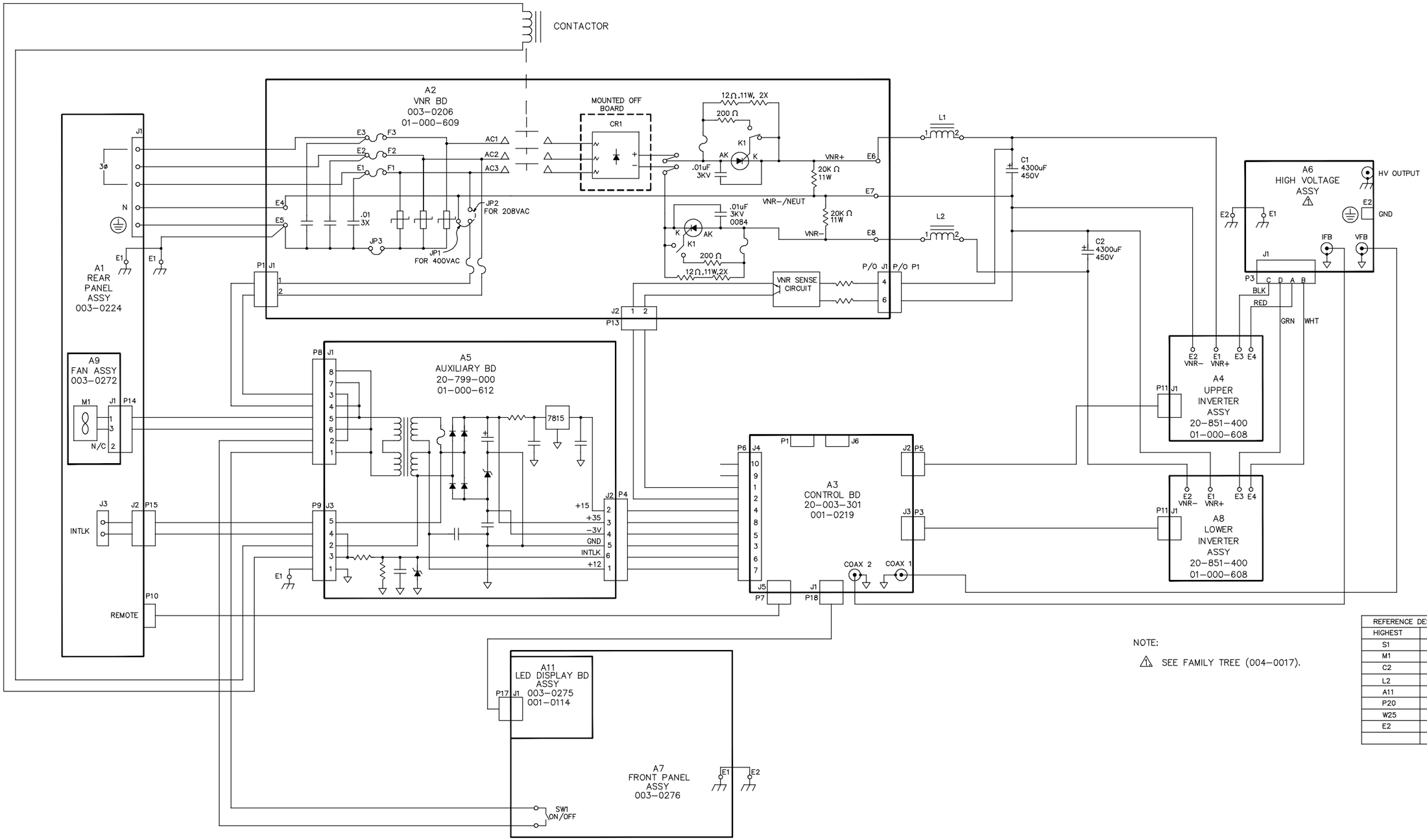

NOTE:

⚠ SEE FAMILY TREE (004–0017).

REFERENCE DESIGNATIONS	
HIGHEST	NOT USED
S1	
M1	
C2	
L2	
A11	
P20	P2
W25	W20,24
E2	

SHEET 1 OF 1

MTL: N/A	TOL: .X = ± .02" .XX = ± .01" .XXX = ± .005" FRAC. = ± 1/64" ANGLES = ± 1/2°	REL. TO MFG. PRJ. ENG. DATE: MFG: DATE: DOC. REL. DATE:	ENG. CTL. DWN: B.WEAVER DATE: 12/90 CHK: DATE: ENG: DATE: APP: DATE:	ELECTRONIC MEASUREMENTS, INC.
FIN: N/A	P/L: 488			TITLE: SCHEMATIC 802S–400VAC SYSTEM
	SCALE: NONE	DO NOT SCALE DWG.		DWG. NO. 001–0253 REV. A

THIS IS A COMPUTER GENERATED DWG.
NO MANUAL REVISIONS ARE PERMITTED.

APPLICATION			LTR	E.C.O. NO.	BY	APP.
USED ON	NEXT ASSY.	QTY.	00	REL. ECO #320 4/91	JT	
802-OEM			A	TG 3 REL. 11/1/95	CJS	

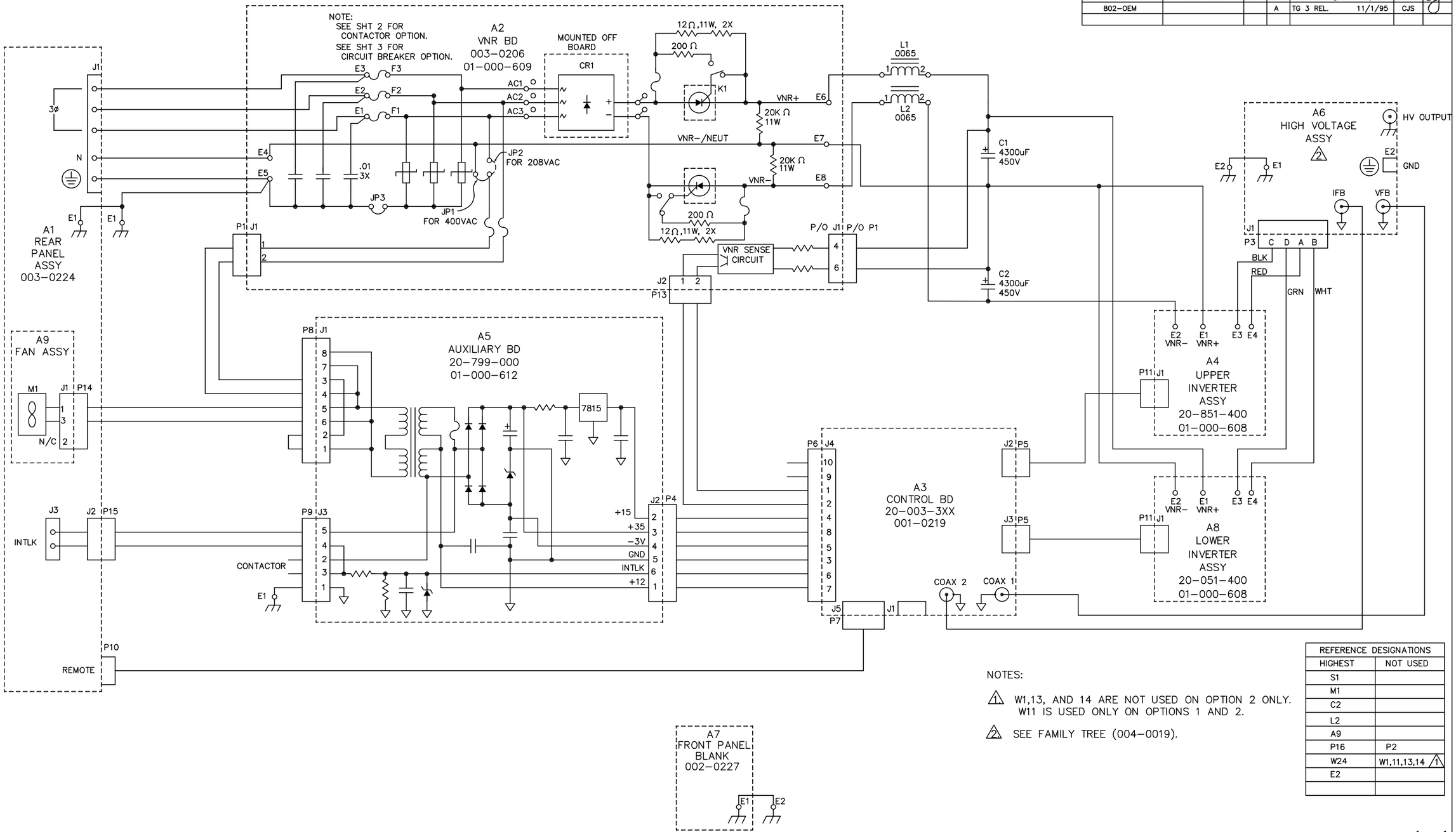

NOTES:

1. W1,13, AND 14 ARE NOT USED ON OPTION 2 ONLY. W11 IS USED ONLY ON OPTIONS 1 AND 2.
2. SEE FAMILY TREE (004-0019).

REFERENCE DESIGNATIONS	
HIGHEST	NOT USED
S1	
M1	
C2	
L2	
A9	
P16	P2
W24	W1,11,13,14 (1)
E2	

SHEET 1 OF 1

MTL:	TOL: .X = ± .02" .XX = ± .01" .XXX = ± .005" FRAC. = ± 1/64" ANGLES = ± 1/2°	REL. TO MFG. PRJ. ENG. DATE:	ENG. CTL. DWN: B.WEAVER DATE: 12/90	ELECTRONIC MEASUREMENTS, INC.
		MFG: DATE:	CHK: DATE: 6/17/95	TITLE: SCHEMATIC 802-OEM 400VAC SYSTEM
FIN:	P/L: 488	DOC. REL. DATE:	DATE: 6/17/95	
	SCALE: N/A	DO NOT SCALE DWG.	APP: DATE: 6/17/95	DWG. NO. 001-0257 REV. A

THIS IS A COMPUTER GENERATED DWG.
NO MANUAL REVISIONS ARE PERMITTED.

APPLICATION			LTR	E.C.O. NO.	BY	APP.
USED ON	NEXT ASSY.	QTY.		SEE SHEET ONE		

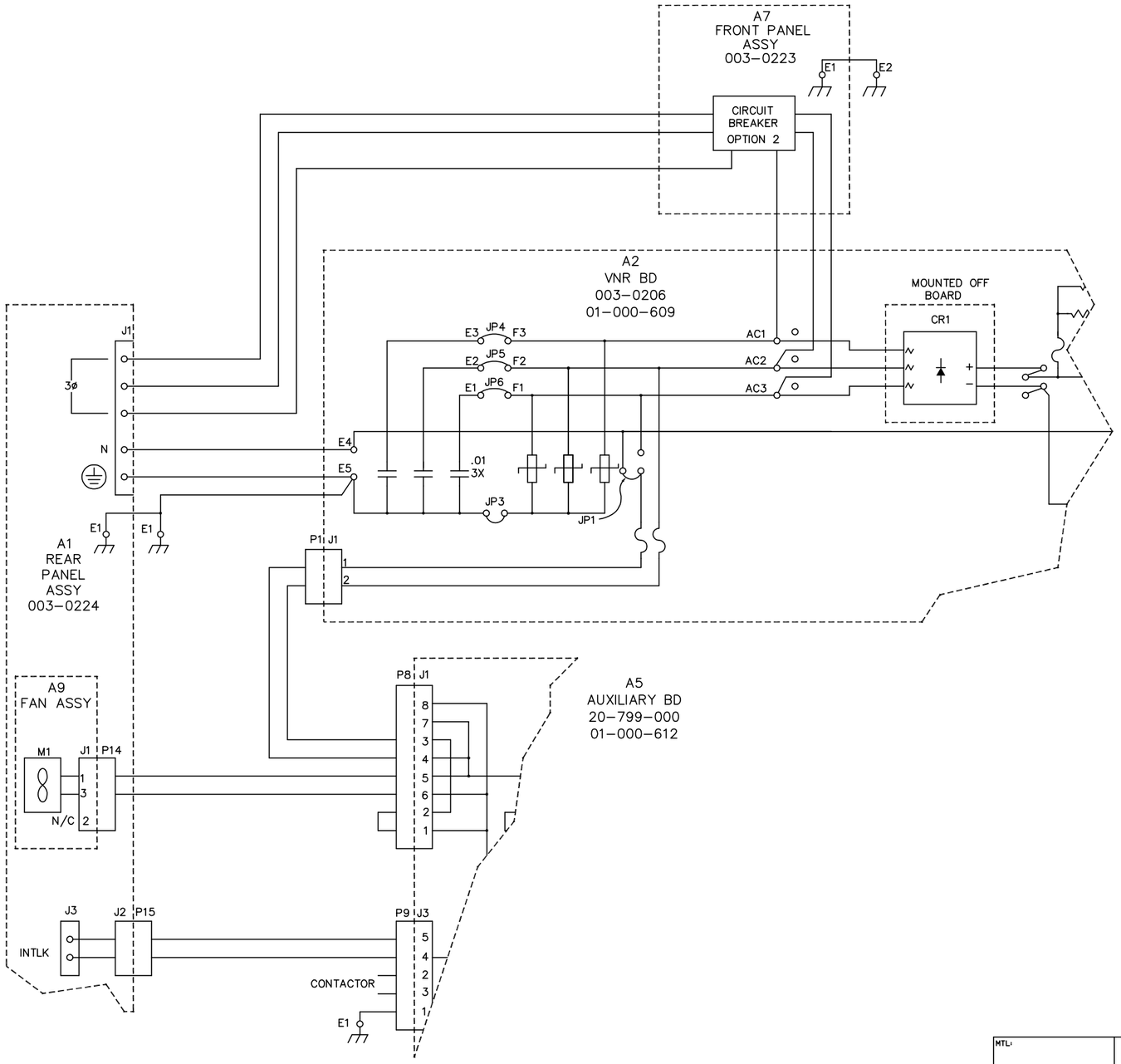

OPTION 2

802 OEM VERSION WITH CIRCUIT BREAKER
AND WITHOUT FUSES.

SHEET 3 OF 3

MTL:	TOL: .X = ± .02" .XX = ± .01" .XXX = ± .005" FRAC. = ± 1/64" ANGLES = ± 1/2°	REL. TO MFG. PRJ. ENG. DATE: MFG: DATE:	ENG. CTL. DWN: B.WEAVER DATE: 12/90 CHK: DATE: 6/17/95 ENG: DATE: 6/17/95	ELECTRONIC MEASUREMENTS, INC.
FIN:	P/L: 488	DOC. REL. DATE:		TITLE: SCHEMATIC 802-OEM 400VAC SYSTEM
	SCALE: N/A	DO NOT SCALE DWG.	APP: DATE: 6/17/95	DWG. NO. 001-0257 REV. A

THIS IS A COMPUTER GENERATED DWG.
NO MANUAL REVISIONS ARE PERMITTED.

APPLICATION			LTR	E.C.O. NO.	BY	APP.
USED ON	NEXT ASSY.	QTY.		SEE SHEET ONE		

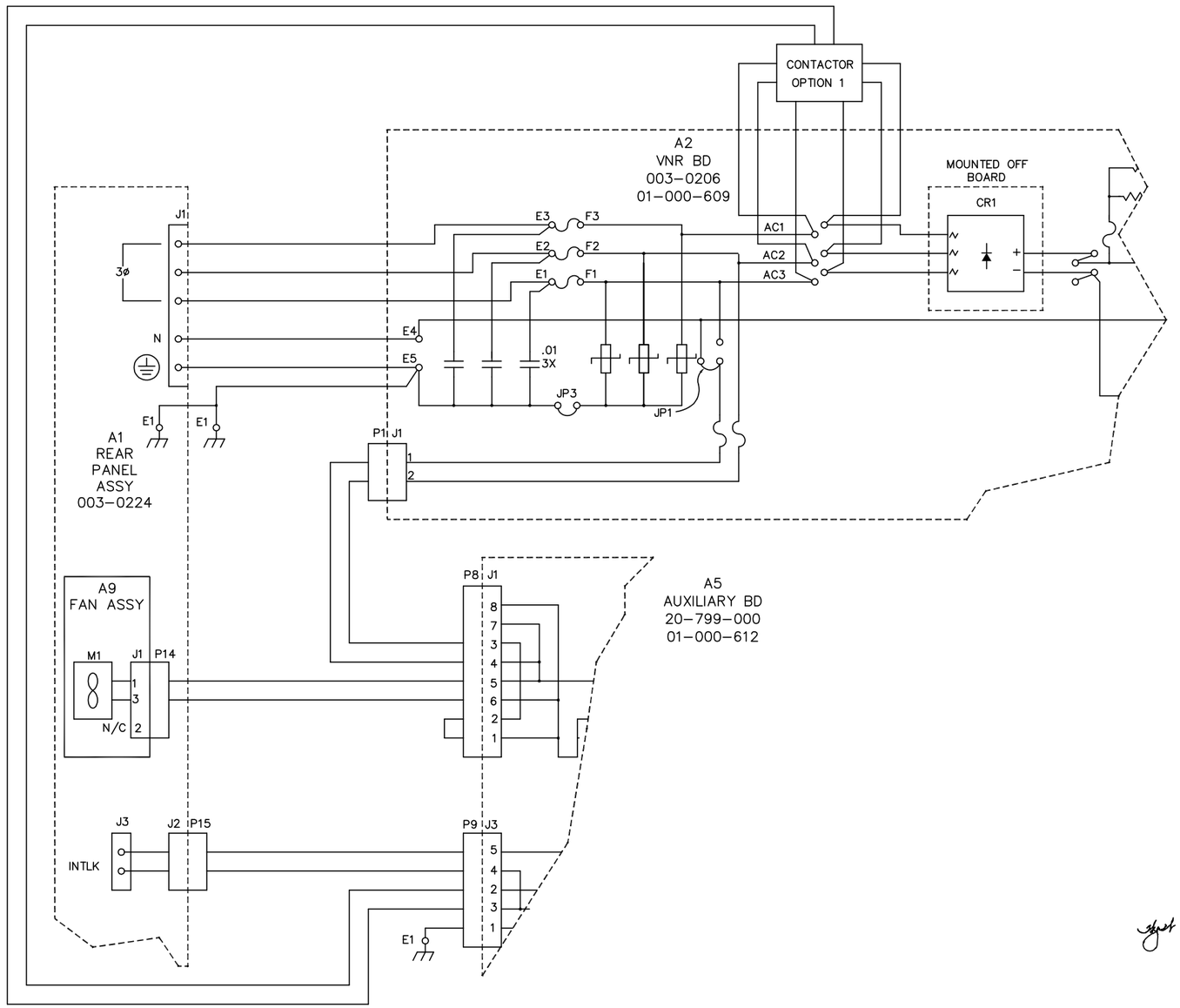

OPTION 1

802 OEM VERSION WITH CONTACTOR

SHEET 2 OF 3

MTL:	TOL: .X = ± .02" .XX = ± .01" .XXX = ± .005" FRAC. = ± 1/64" ANGLES = ± 1/2°	REL. TO MFG. PRJ. ENG. DATE: MFG: DATE:	ENG. CTL. DWN: B.WEAVER DATE: 12/90 CHK: DATE: 6/17/95	ELECTRONIC MEASUREMENTS, INC.	
FIN:	P/L: 488	DOC. REL. DATE:	ENG: DATE: 6/17/95	TITLE: SCHEMATIC 802-OEM 400VAC SYSTEM	
	SCALE: N/A	DO NOT SCALE DWG.	APP: DATE: 6/17/95	DWG. NO. 001-0257	REV. A

APPLICATION			REVISION RECORD			
USED ON	NEXT ASSY	QTY	LTR	DESCRIPTION	APPROVED	DATE
402, 802, 1202			1	PROTO RELEASE	GB 8/29/96	GFS
			2	INITIAL RELEASE	GB 3/11/97	GFS
			3	GENERAL CLEANUP	JB 6/13/97	GFS
			A	TC RELEASE	LPN 7/31/97	GFS
			B	ECO # 16636	LPN 9/4/97	GFS
			C	ECO # 17449	LPN 11/16/98	GFS
			D	ECO # 18660	LPN 9/10/99	

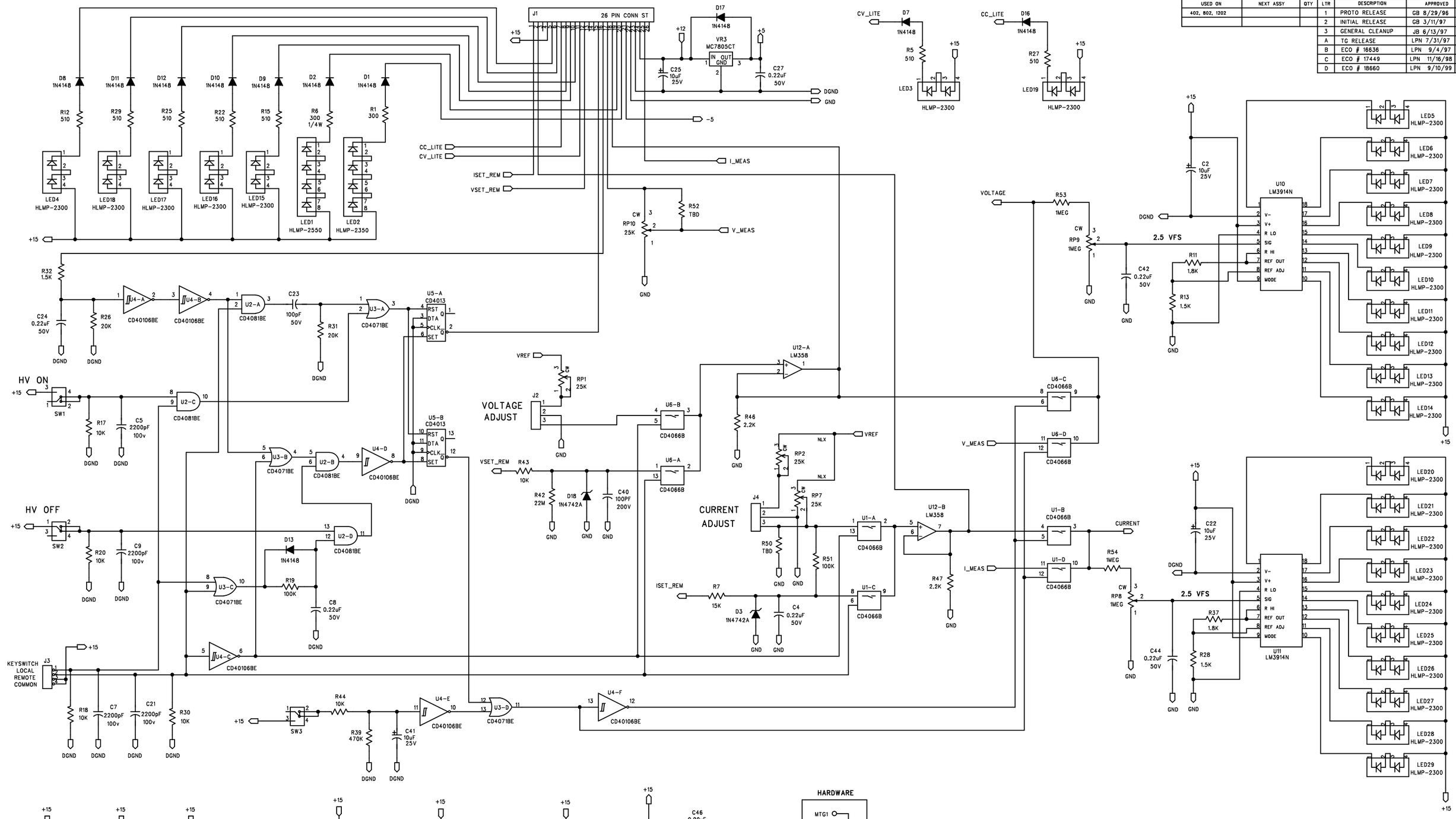

NOTES:

1. UNLESS SPECIFIED, ALL RESISTORS ARE IN OHMS, CARBON COMP, 1/4W, 5%. ALL CAPACITORS ARE IN MICROFARADS. K = 1,000 AND M = 1,000,000.
2. REF. ASSEMBLY 20-008-400.

RELEASE TO MFG		ENG CONTROL		ELECTRONIC MEASUREMENTS INC.	
PROJ ENG: JAB	DATE: 9/5/97	DRAWN: DSF	DATE: 8/29/96	TITLE: SCHEMATIC 1202 DISPLAY PCB	
MFG: R.S.	DATE: 9/5/97	CHK: DRB	DATE: 8/29/96		
DOC REL: GFS	DATE: 9/5/97	ENG: GB	DATE: 8/29/96	P/L: 493	PCB NO: PCB # 21-003-900 / SHEET 1 OF 2
		APPVD: GFS	DATE: 9/5/97	DRAWING NO: 01-000-728	REV: D

APPLICATION			REVISION RECORD			
USED ON	NEXT ASSY	QTY	LTR	DESCRIPTION	APPROVED	DATE
				SEE SHEET 1 FOR CHANGES		

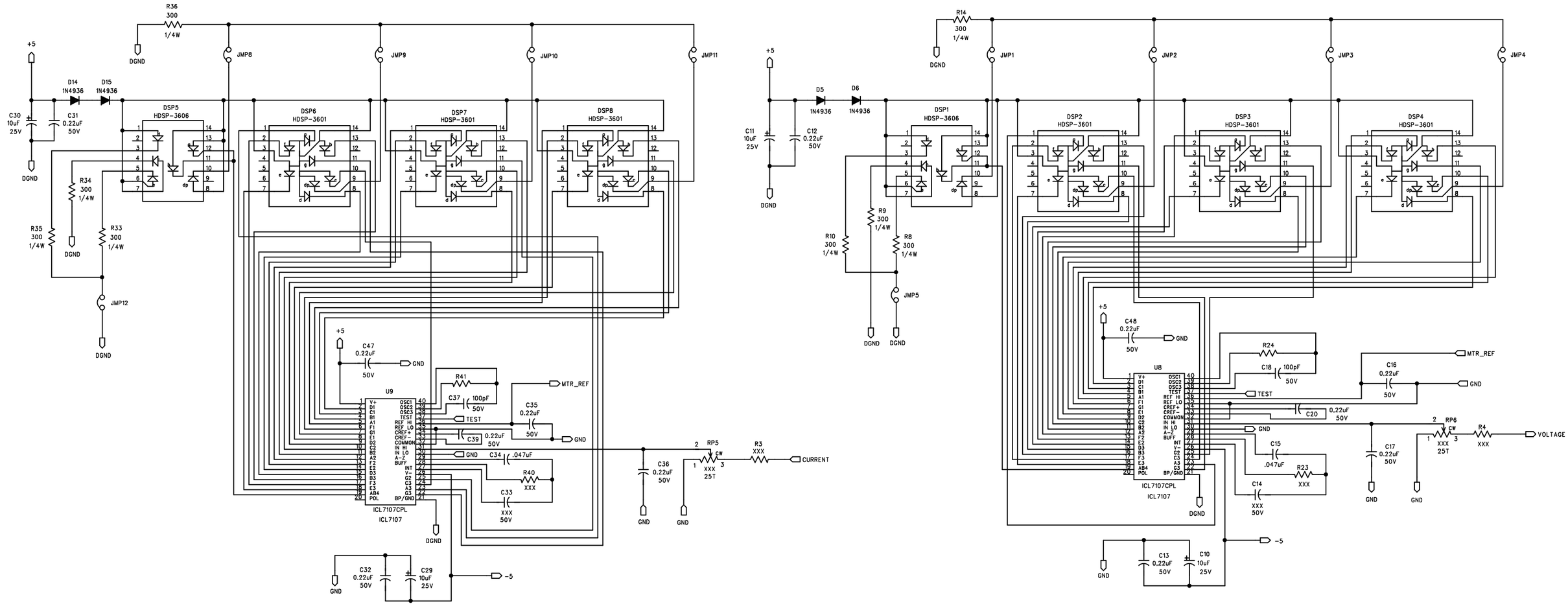

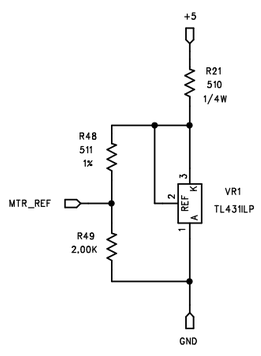

METER TEST

J5-1 — TEST

J5-2 — +5

ELECTRONIC MEASUREMENTS INC.	
TITLE: SCHEMATIC 1202 DISPLAY PCB	
	SHEET 2 OF 2
DRAWING NO: 01-000-728	REV: D

THIS IS A COMPUTER GENERATED DWG.
NO MANUAL REVISIONS ARE PERMITTED.

APPLICATION			LTR	E.C.O. NO.	BY	APP.
USED ON	NEXT ASSY.	QTY.	06	REVISED PER ECO# 424 8/91	JT	
CONTROL BD.	102, 152, 402, 802		07	ENGINEERING CHANGE 7/95	AK	
			A	ECO 16090 04/30/02	RFC	
			B	ECO 22352 09-27-06	KHL	

NC→J1-1 NC→J1-2 NC→J1-7 NC→J1-11 NC→J1-13 NC→J1-14 NC→J1-26
NC→J2-3 NC→J3-6 NC→J2-9
NC→J3-3 NC→J3-6 NC→J9-9
NC→J5-3 NC→J5-4 NC→J5-7 NC→J5-16 NC→J5-21 NC→J5-26
NC→J6-1 NC→J6-2 NC→J6-3 NC→J6-4 NC→J6-7 NC→J6-16
NC→J6-17 NC→J6-21 NC→J6-24 NC→J6-25 NC→J6-26

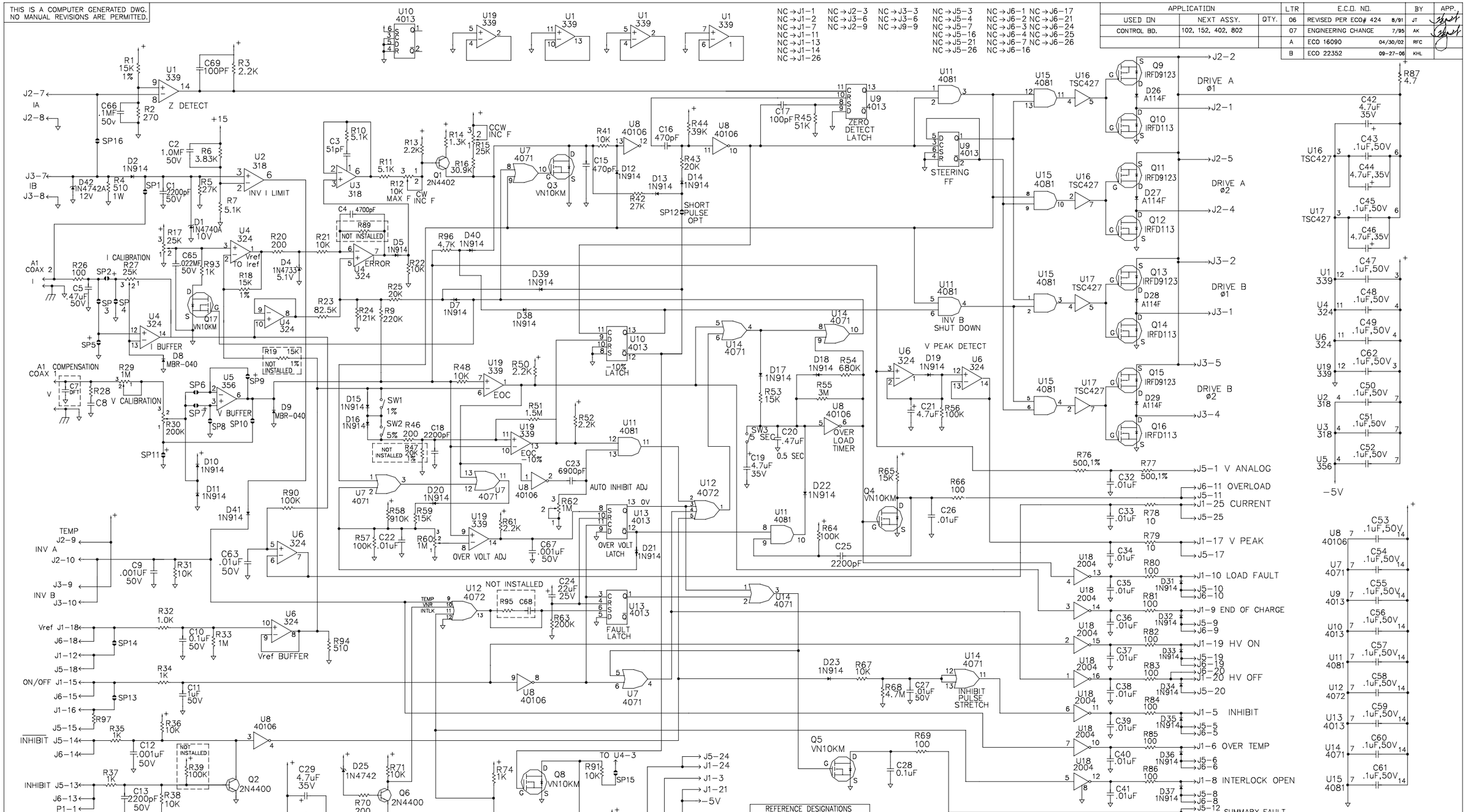

REFERENCE DESIGNATIONS	
HIGHEST	NOT USED
C69	
COAX2	
D42	
J6	
P1	
Q17	
R96	R92,94
SP15	
SW3	
U19	

NOTE: REF. DES. NOT POPULATED ARE C8,64,68;D3,30;R8,9,47,49,88,95.

AUTOCAD DRAWING.
THIS IS A STANDARD FORMAT.
NOT ALL BOXES APPLY TO EVERY
DRAWING AND MAY NOT BE FILLED IN.

SHEET 1 OF 1

MTL: N/A	TOL: .X = ± .02" .XX = ± .01" .XXX = ± .005" FRAC. = ± 1/64" ANGLES = ± 1/2°	REL. TO MFG. PRJ. ENG. DATE: MFG: DATE: DOC. REL. DATE:	ENG. CTL. DWN: AMGAD 7/13/95 CHK: 7/13/95 APP: 7/13/95
FIN:	P/L: SCALE:	DO NOT SCALE DWG.	

LAMBDA EMI

TITLE: SCHEMATIC CONTROL BD

DWG. NO. 001-0219 REV. B

*THIS IS A COMPUTER GENERATED DWG.
NO MANUAL REVISIONS ARE PERMITTED.

APPLICATION			LTR	E.C.O. NO.	BY	APP.
USED ON	NEXT ASSY.	QTY.	00	ECO # 299 8/90	DRP	
YD-4 OEM YD-6 OEM			01	ECO # 340 3/91	JT	
402 802			02	ECO # 387 5/91	JT	
			03	CHANGE TO EMI FORMAT 10/19/94	SAdB	
			A	TG3 RELEASE 11/95	SAdB	
			B	ECO #15212 2/13/96	WJW	GFS
			C	ECO #16806 11/13/97	CJS	GFS
			D	ECO #19281 7/7/00	LPN	

REFERENCE DESIGNATIONS	
HIGHEST	NOT USED
C6	
CR8	
F1	
J3	
R3	
T1	
U1	

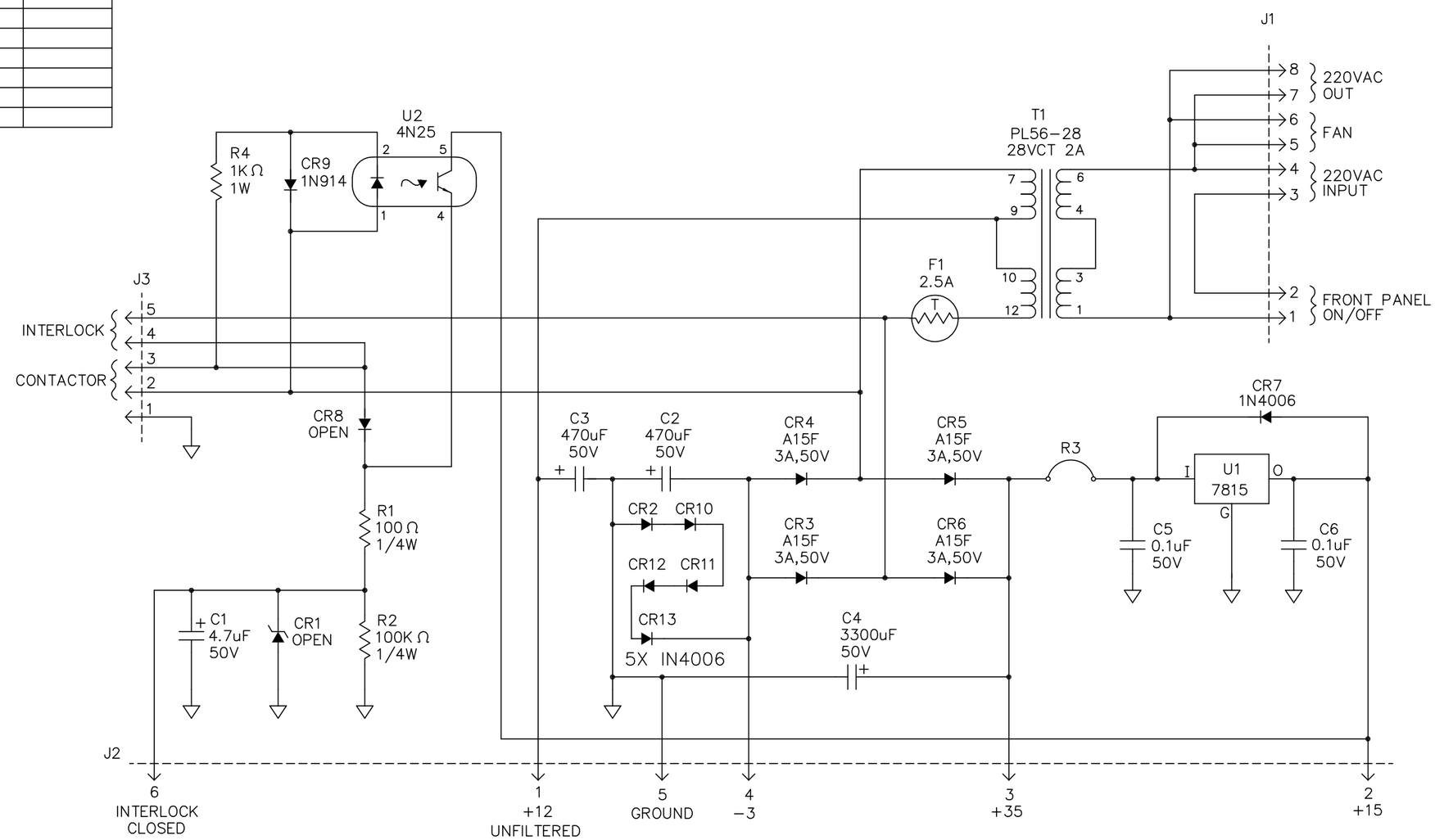

SHEET 1 OF 1

TOL:	REL. TO MFG.	ENG. CTL.	
.X = ± .02"	PRJ. ENG. DATE: 11/16/95	DWN: TURCOTTE DATE: 3/20/90	LAMBEDMAT An Invensys company
.XX = ± .01" .XXX = ± .005" FRAC. = ± 1/64" ANGLES = ± 1/2°	MFG: R.S. DATE: 11/21/95	CHK: DATE: 10/19/94	TITLE: SCHEMATIC PCB A5 AUXILIARY BD 802 STD
P/L: 488	DOC. REL. DATE: 11/16/95	ENG: DATE: 10/19/94	
SCALE: N/A	DO NOT SCALE DWG.	APP: DATE: 10/19/94	DWG. NO. 01-000-612 REV. D

THIS IS A COMPUTER GENERATED DWG.
NO MANUAL CHANGES ARE PERMITTED.

REVISIONS			
LTR	DESCRIPTION	BY/DATE	APP/DATE
1	INITIAL RELEASE	RFC	GFS
2	TG CHANGE	RHS	GFS
A	ECO # 18955 REDRAWN FROM AUTOCAD	LPN 5/4/00	GFS
B	ECO # 19360	LPN 9/15/00	GFS
C	ECO # 19423	LPN 9/27/00	GFS
D	ECO 21939A	KHL 10-19-05	

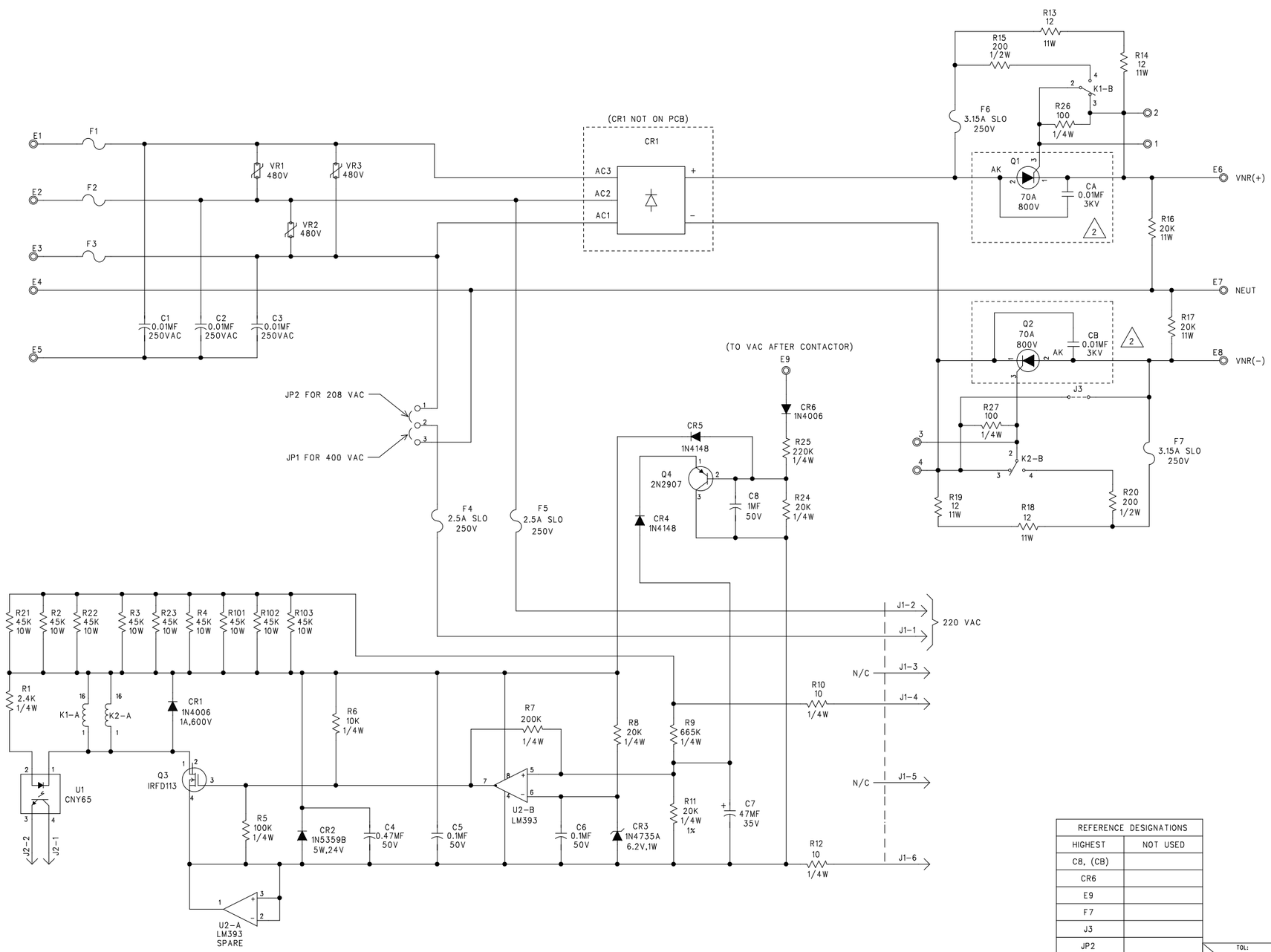

NOTES:

1. VNRUV ↑ = 233V

   VNRLV ↓ = 191V

2. CAPS CA & CB AND RECTIFIERS Q1 & Q2 ARE NOT ON PRINTED CIRCUIT BD.

3. UNLESS SPECIFIED, ALL RESISTORS ARE IN OHMS. ALL CAPACITORS ARE IN MICROFARADS. K = 1,000 AND M = 1,000,000.

4. REF. ASSEMBLY 20-023-900.

REFERENCE DESIGNATIONS	
HIGHEST	NOT USED
C8, (CB)	
CR6	
E9	
F7	
J3	
JP2	
K2	
Q4	
R103	R28 THRU R100
U2	
VR2	

TOL: .X = ±.02 .XX = ± .01 .XXX = ± .005 FRAC = ± 1/64 ANGLES = ± 1/2	RELEASE TO MFG	ENG CONTROL	LAMBDA EMI
	PRJ.MGR: SA DATE: 10/6/00	DWN: LPN DATE: 4/27/00	TITLE: SCHEMATIC PCB A2 VNR BOARD XR802 STD
	MFG: RS DATE: 11/20/00	CHK: GFS DATE: 1/27/00	
P/L: 488	DOC.REL: GFS DATE: 10-4-00	ENG: S.A. DATE: 1/27/00	PCB: 21-023-900 SHEET 1 OF 1
SCALE:		APP: GFS DATE: 1/27/00	DRAWING NO: 01-023-900 REV. D

PADS DRAWING.
THIS IS A STANDARD FORMAT.
NOT ALL BOXES APPLY TO EVERY DRAWING AND MAY NOT BE FILLED IN.

Dimensonal Outline Drawing
Models 802S EM
Dimensions in inches (mm)

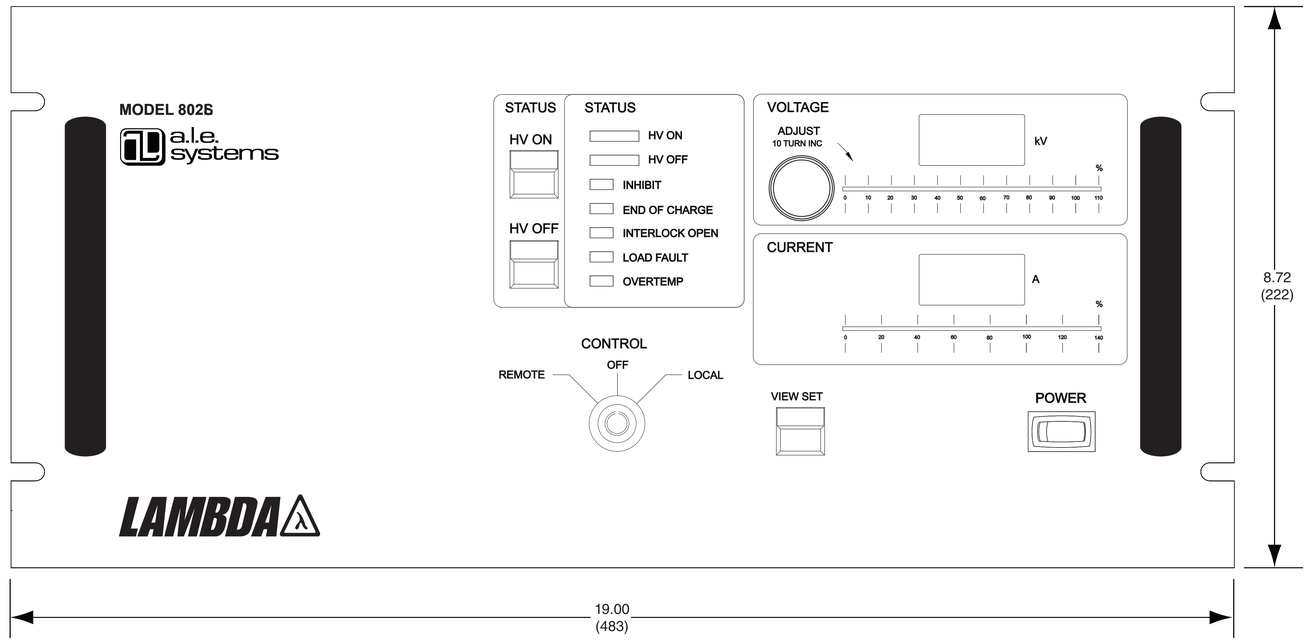

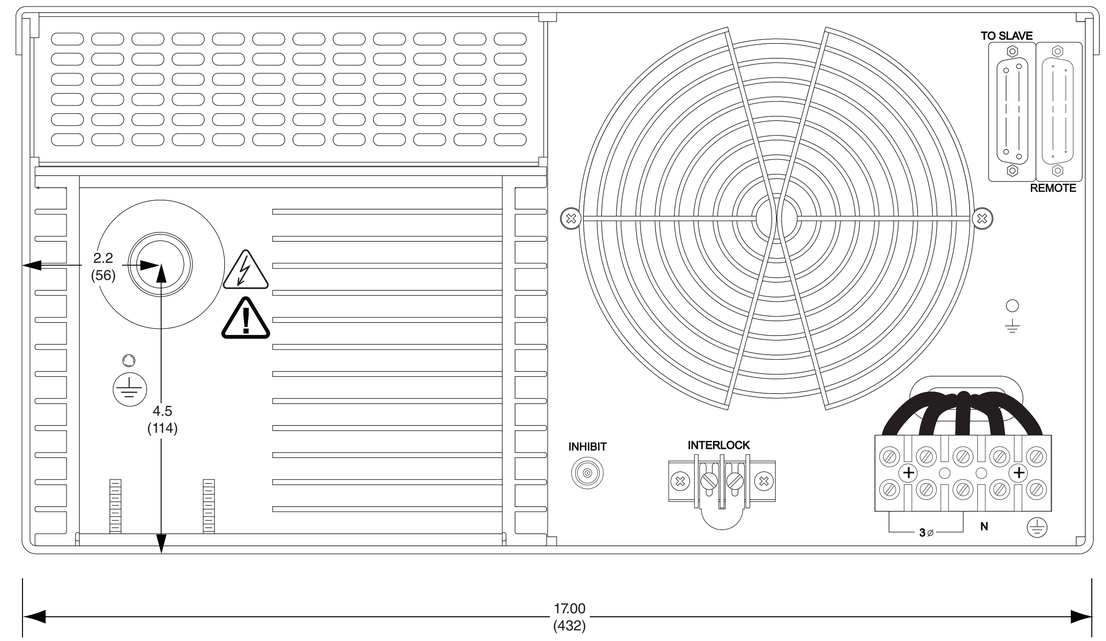

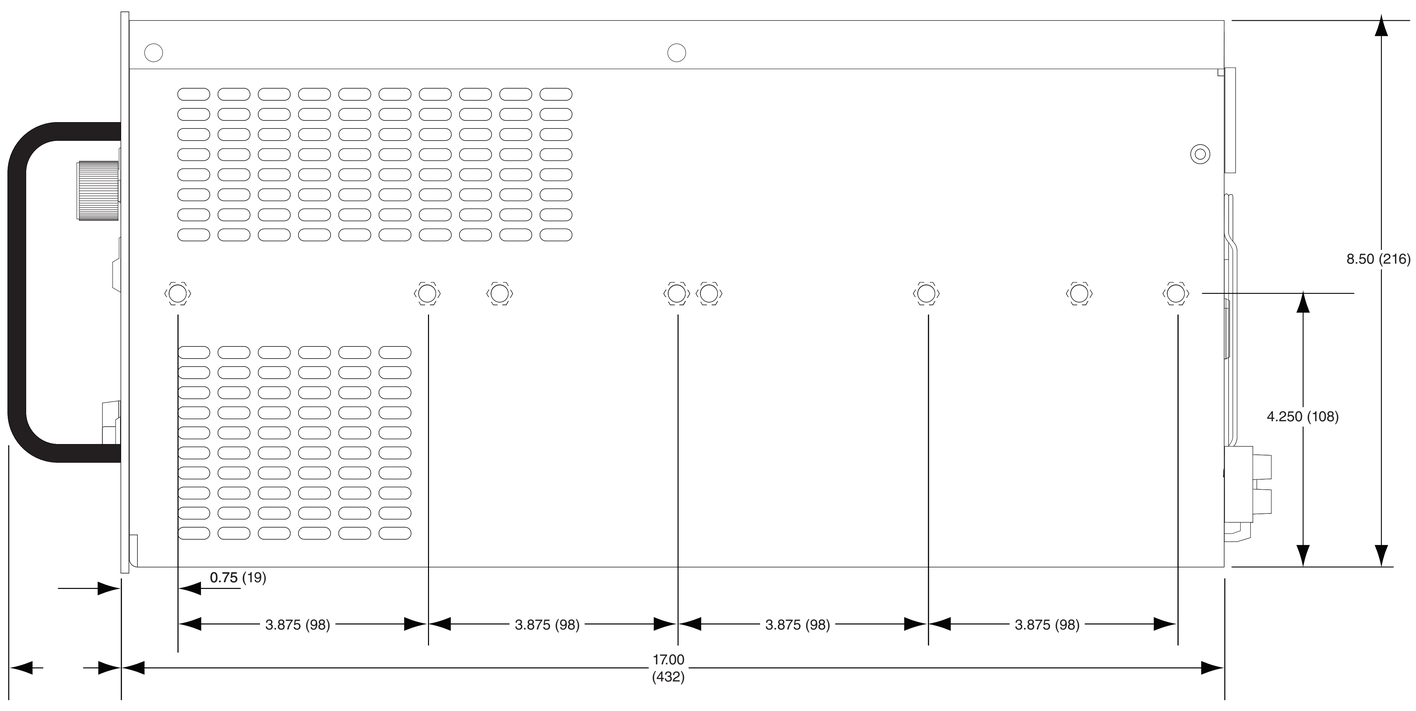

Notes:

1 - Chassis slide mounting pattern matches General Devices CT series or equivalent with 3.875" hole spacing.

2 - Cooling air exits rear of unit and enters at either side. Do not block air vents or cooling fan and allow several inches of clearance at rear of unit.

3 - Allow 6" bend radius at rear of unit for HV cable.

Dimensonal Outline Drawing
Models 802S EM
Dimensions in inches (mm)

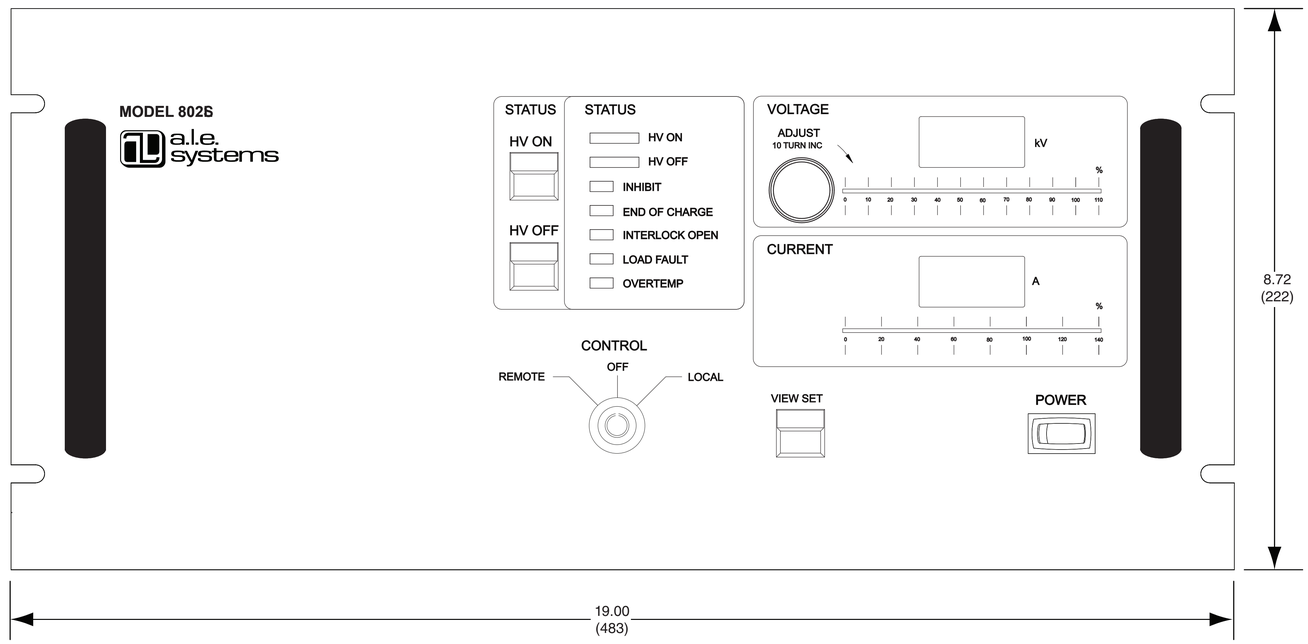

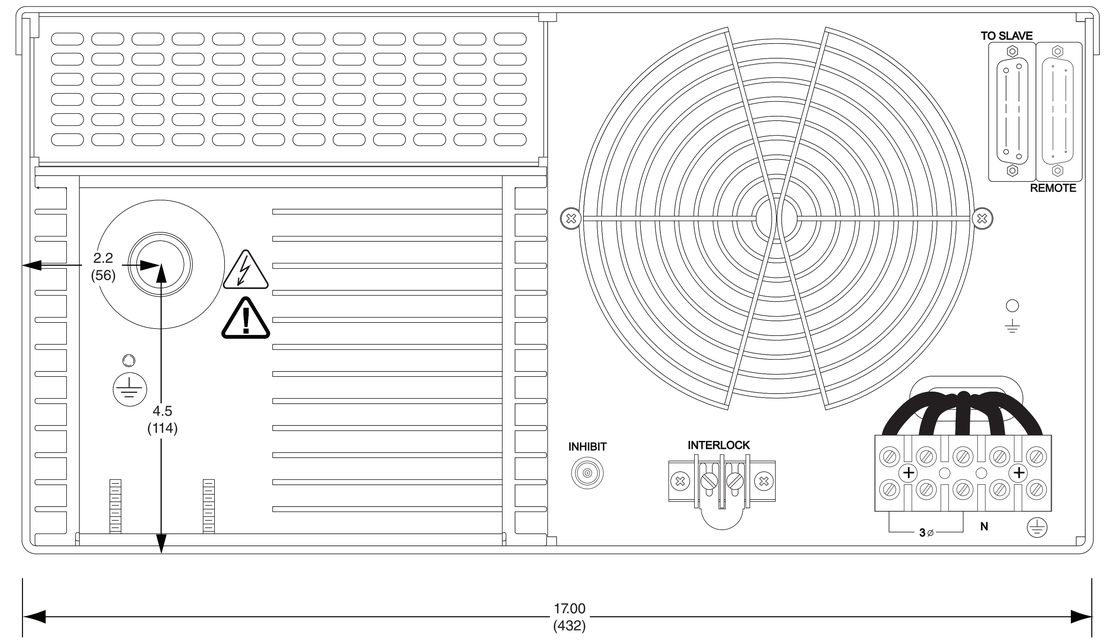

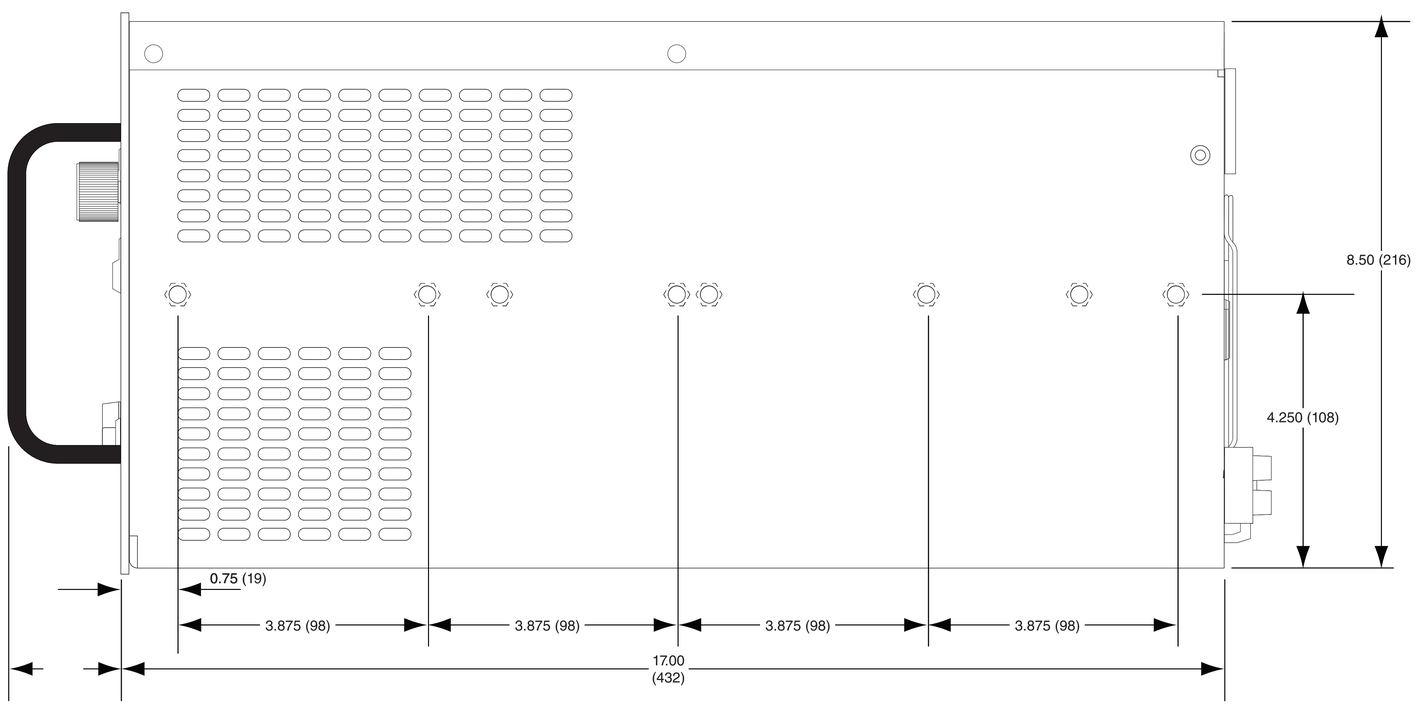

Notes:

1 - Chassis slide mounting pattern matches General Devices CT series or equivalent with 3.875" hole spacing.

2 - Cooling air exits rear of unit and enters at either side. Do not block air vents or cooling fan and allow several inches of clearance at rear of unit.

3 - Allow 6" bend radius at rear of unit for HV cable.

Dimensonal Outline Drawing
Models 802S EM
Dimensions in inches (mm)

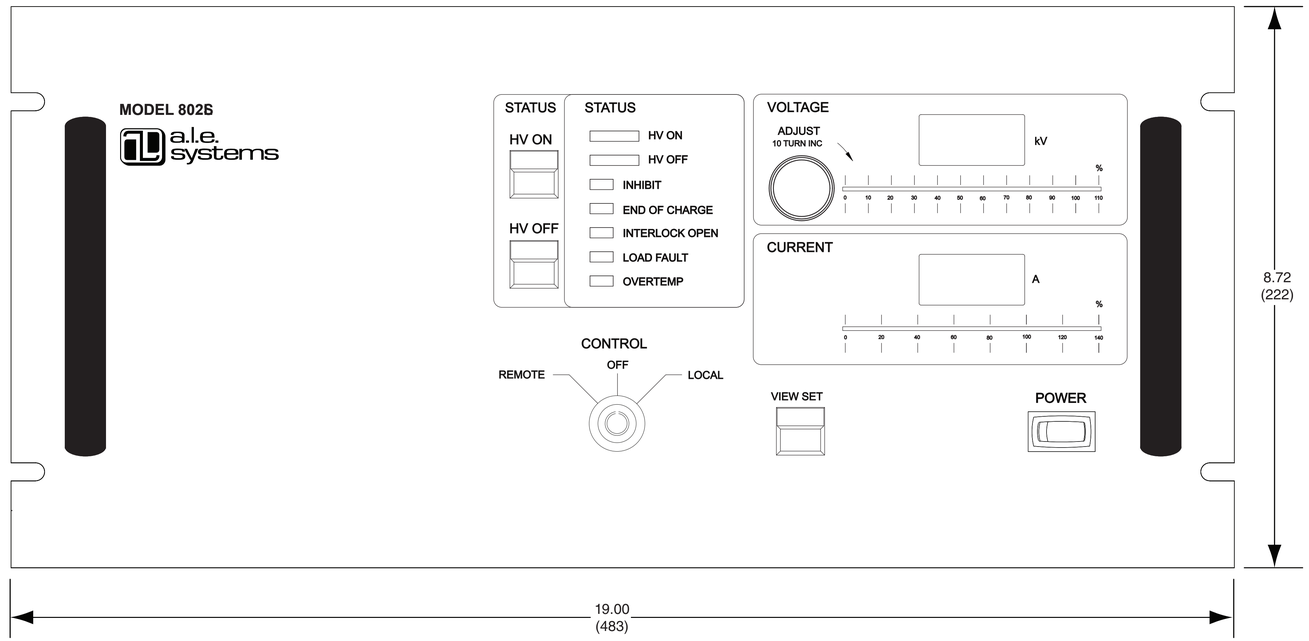

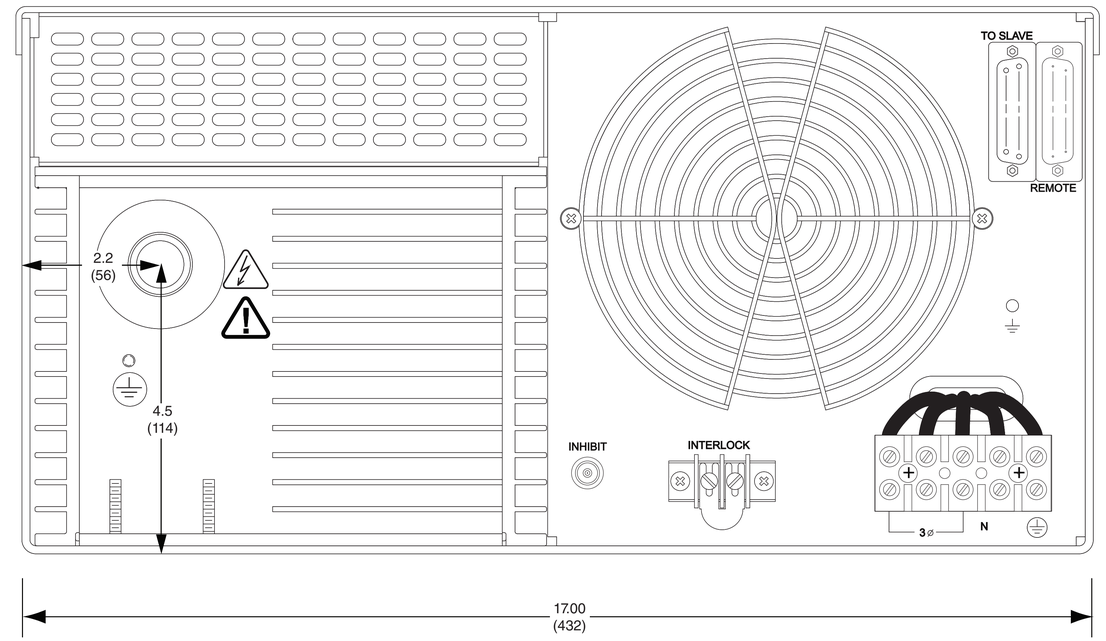

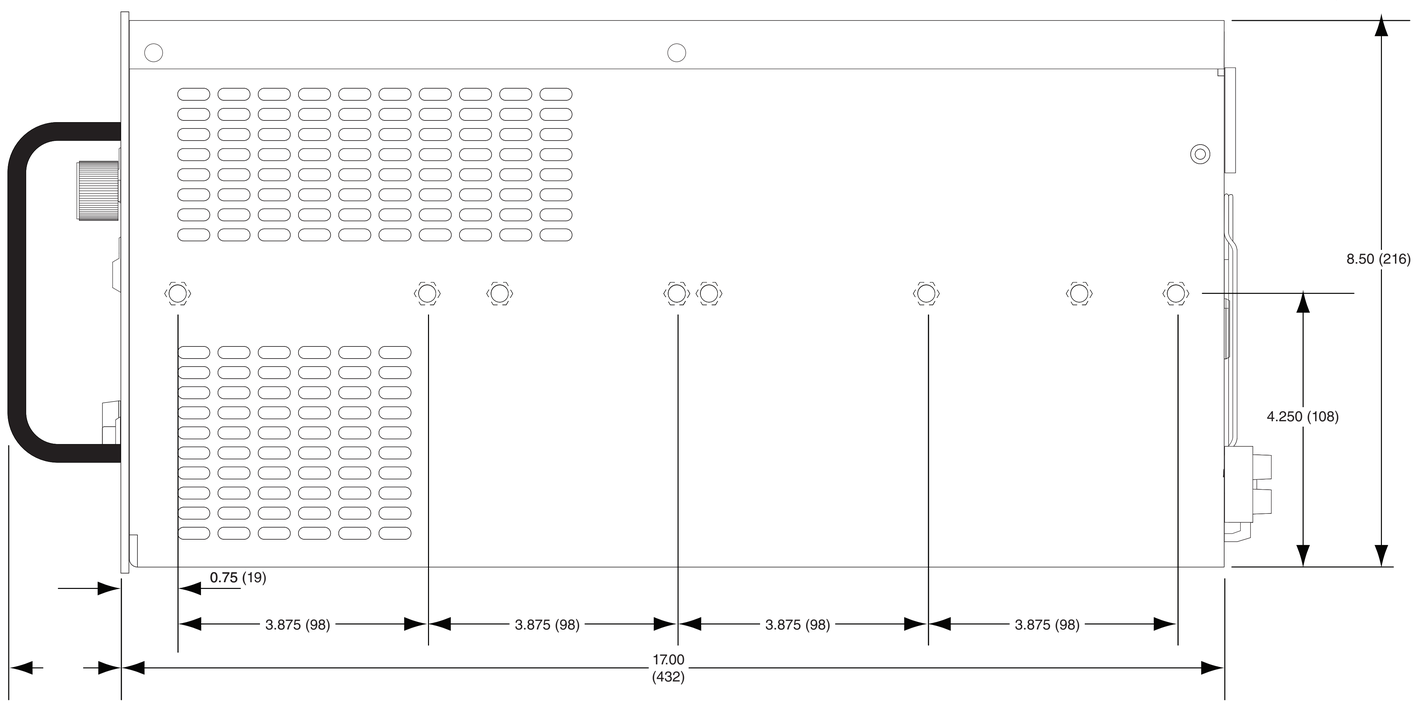

Notes:

1 - Chassis slide mounting pattern matches General Devices CT series or equivalent with 3.875" hole spacing.

2 - Cooling air exits rear of unit and enters at either side. Do not block air vents or cooling fan and allow several inches of clearance at rear of unit.

3 - Allow 6" bend radius at rear of unit for HV cable.

Specification for the Charge Supplies
Capacitor Charge/Discharge Power Supply (CCDPS) for FLARE

February 27, 2016

Contents

List of Tables

List of Figures

1 Overview

A FLARE CCDPS module consists of a number of storage capacitors connected in parallel to a discharge switch. Each module is charged by a matched pair of switching power supplies, connected together to produce a bipolar output. In normal operation, a DPST normally-open relay closes for the charging period and disconnects the charging supplies prior to discharge. A network of resistors and diodes provide protection for the power supply under several failure scenarios discussed in Section 4.

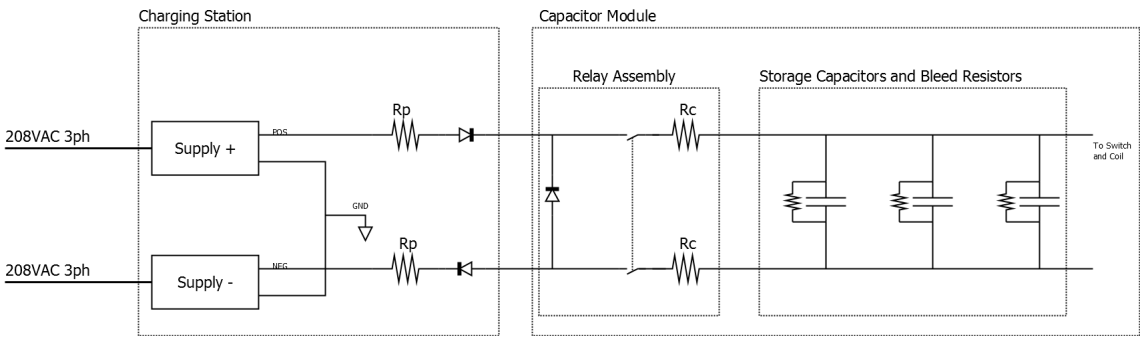

Figure 1: Charging scheme in use for the FLARE CCDPS banks. The resistor values are given in Table 1.

2 Charging Supplies

Each bank for the experiment has at least two supplies - having equal positive output and negative output to produce a bipolar output. TDK-Lambda supplies are used heavily, as their supply curves are closer to constant-power and are therefore more cost-effective in meeting the charge time specification (whereas the Spellman supply is constant-current, resulting in a power output that is quadratic in time). PFA and PFB are charged by the separate bipolar supplies to support charging to different voltages, as are TFA and TFB similarly. Under initial operation the reduced-energy banks will be connected in parallel, trading operational flexibility for reduced expenditures in the early phase. All charging supplies operate on 3-phase 208VAC or 24VDC. For the 24VDC modules a power supply is included so all the power supplies ultimately derive power from 208VAC.

	OH	EF	GF	PFA/B	TFA/B	DCI	DCO
Supply models (see table below)	(b)	(c)	(a)x3	(b)	(d)	(e)	(f)
Protection Resistor value (Rp) [Ω]	180	2.2	54	100	640	180k	70k
Protection Resistor rating [W]	50	20	200	100	20	1	1
Charge Resistor value (Rc) [Ω]	1600	10	720	2000	5600	1.6M	640k
Charge Resistor rating [W]	2000	2000	2000	2000	2000	10	10
Charge module bleed resistor value (Rb) [MΩ]	-	-	-	-	-	2000	800

	Manufacturer	V_{max} [kV]	Qty. Ea. full power	Qty. Ea. initial	Supply (+) model	Supply (-) model
(a)	TDK-Lambda	10	3	1	802L-10kV-POS-208VAC	802L-10kV-NEG-208VAC
(b)	TDK-Lambda	10	3	1	402L-10kV-POS-208VAC	402L-10kV-NEG-208VAC
(c)	TDK-Lambda	1	1	1	402L-1kV-POS-208VAC	402L-1kV-NEG-208VAC
(d)	Spellman	10	2	1	SLM10P1200	SLM10N1200
(e)	UltraVolt	30	1	-	30C24-P60-I10	30C24-N60-I10
(f)	UltraVolt	30	1	-	30C24-P125-I10	30C24-N125-I10

Table 1: Charge supply and resistor specifications.

	Supply Model	Qty. Ea. full power	Current draw (ea) [A]	Subtotal [A]
(a)	TDK-Lambda 802L	6	50	240
(b,c)	TDK-Lambda 402L	8	25	160
(d)	Spellman SLM10	2	7	14
(e,f)	Mean Well LRS-350-24	1	2	2
			Total Amps:	416

Table 2: Facility power requirements for charging supplies. All supplies operate on 208VAC 3-phase.

Manufacturer	HV ON pins	$V_{control}$ range	$V_{control}$ pin	Voltage ref (GND) pin
TDK-Lambda 802L	8,14	0-10V	22	24
TDK-Lambda 402L	8,14	0-10V	22	24
Spellman SLM10	11,12 (J2)	0-10V	3	9
Advanced Energy/UltraVolt	4,7	0-10V	6	5

Table 3: Supply control interface.

Facility power requirements for the charging supplies are listed in Table 3. All charge supplies shall have their power interrupted by normally-open relay upon receipt of the Emergency Stop signal.

The high voltage output stage of each supply shall be enabled by external relay-closure at the CCDPS control computer. All charging supplies are controlled by 0-10VDC analog signal representing a charge voltage from 0 to the maximum supply output voltage listed in Table 1. This control signal shall be produced by analog output at the CCDPS control computer.

3 Charge Connect Modules

One charge connect module is installed at each capacitor bank module. The charge connect module consists of two charge resistors, one DPST relay for connecting the charge supply to the bank, and one protection diode, as seen in Figure 2. The charge resistors reduce the risk of charging supply damage in the case of a busswork arc, ground fault, or capacitor failure; they are rated to 2kW and are of wire-wound type (as the added inductance improves fault isolation) except for DCI and DCO which only require 10W power rating. The role of the protection diode is described in Section 4.

The DCI and DCO modules utilize the 60kV variant of the charge connect module, which is designed for immersion of the components in insulating oil. The 60kV variant may be operated below 30kV without oil. Included in this variant is a bleed resistor that slowly discharges the capacitor as a final redundant energy dump. The bleed resistor is included with the charge connect module in this case in order to reduce the component count near the discharge and crowbar switches, enabling the lowest inductance design. The larger, lower-voltage banks utilize a bleed resistor installed on each individual capacitor; those are discussed in the Dump section of the specification of each of those banks. The 60kV charge connect module also includes the supply protection resistors so that they are immersed in oil without requiring another oil reservoir.

4 Charge supply protection

If a bank pre-fires, the charge relays will still connect the charging supplies to the bank and any programmed crowbar will not operate. This potentially presents a large reversed voltage to the charging supply. The charging supply might also be exposed to reversed voltages if the charge disconnect relay fails in the closed state. A protection diode is installed across the charging supply connection to mitigate these risks. Under normal charging the diode is reverse-biased and does not conduct appreciable current. In the event of a pre-fire and bank reversal the diode becomes forward-biased. The current in the diode is then limited by the

charge resistor, and the voltage reversal presented to the charging supply is limited to the forward voltage drop of the diode.

Protection resistors are installed on the output of each power supply that operate in complement to the protection diodes described above. If a connected capacitor bank pre-fires, reversed voltages on the charging supply cable are limited to the protection diode's forward voltage drop; the additional protection resistor limits the current that arises in the supplies' internal protection diodes due to the resulting forward bias. Additionally if a short-circuit failure occurs along the charge line the protection resistors will limit the prompt current until the supplies can register the overload condition. These resistors are designed not to limit the supply current under normal operation. The combination of charge resistor, protection diode, and protection resistor follows the recommendations of Ref. [2], adapted to a bipolar supply.

In the event of a ground fault the bipolar capacitor bank will shift far away from balanced voltages – potentially doubling the voltage with respect to ground. If such a fault occurs while the charge disconnect relay is still connected to the charge supply then the lifted voltage might destroy the supply. Output diodes are installed that would become reverse-biased in this case, providing a voltage drop to match the supply output and preventing damage.

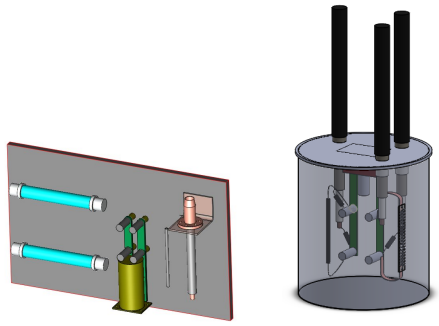

(a) (b)

Figure 2: Charge connect module CAD models: (a) 20kV variant, (b) 60kV variant. The resistor values are given in Table 1.

5 References

References

[1] Statement of Work for Design of Capacitor Charge/Discharge Power Supply (CCDPS) for FLARE FLARE-CCDPS-150828, Revision 0, Sept. 9th 2015

[2] Interfacing Pulsed Power Systems to Switching Power Supplies, Presented at International Power Modulator Conference, Hollywood, California, July 1-3, 2002

6 Appendices

6.1 Vendor specifications

350W Single Output Switching Power Supply

LRS-350 series

Features

- AC input range selectable by switch
- Withstand 300VAC surge input for 5 second
- Protections: Short circuit / Overload / Over voltage / Over temperature
- Forced air cooling by built-in DC fan
- Built-in cooling Fan ON-OFF control
- 1U low profile
- Withstand 5G vibration test
- LED indicator for power on
- No load power consumption<0.75W
- 100% full load burn-in test
- High operating temperature up to 70℃
- Operating altitude up to 5000 meters (Note.8)
- High efficiency, long life and high reliability
- 3 years warranty

Applications

- Industrial automation machinery
- Industrial control system
- Mechanical and electrical equipment
- Electronic instruments, equipments or apparatus

Description

LRS-350 series is a 350W single-output enclosed type power supply with 30mm of low profile design. Adopting the input of 115VAC or 230VAC (select by switch), the entire series provides an output voltage line of 3.3V, 4.2V, 5V, 12V, 15V, 24V, 36V and 48V.

In addition to the high efficiency up to 89%, with the built-in long life fan LRS-350 can work under -25~+70℃ with full load. Delivering an extremely low no load power consumption (less than 0.75W), it allows the end system to easily meet the worldwide energy requirement. LRS-350 has the complete protection functions and 5G anti-vibration capability; it is complied with the international safety regulations such as UL60950-1. LRS-350 series serves as a high price-to-performance power supply solution for various industrial applications.

Model Encoding

LRS - 350 - 3.3

- 3.3 — Output voltage
- 350 — Output power
- LRS — Series name

SPECIFICATION

MODEL		LRS-350-3.3	LRS-350-4.2	LRS-350-5	LRS-350-12	LRS-350-15	LRS-350-24	LRS-350-36	LRS-350-48
OUTPUT	DC VOLTAGE	3.3V	4.2V	5V	12V	15V	24V	36V	48V
	RATED CURRENT	60A	60A	60A	29A	23.2A	14.6A	9.7A	7.3A
	CURRENT RANGE	0 ~ 60A	0 ~ 60A	0 ~ 60A	0 ~ 29A	0 ~ 23.2A	0 ~ 14.6A	0 ~ 9.7A	0 ~ 7.3A
	RATED POWER	198W	252W	300W	348W	348W	350.4W	349.2W	350.4W
	RIPPLE & NOISE (max.) Note.2	150mVp-p	150mVp-p	150mVp-p	150mVp-p	150mVp-p	150mVp-p	200mVp-p	200mVp-p
	VOLTAGE ADJ. RANGE	2.97 ~ 3.6V	3.6 ~ 4.4V	4.5 ~ 5.5V	10.2 ~ 13.8V	13.5 ~ 18V	21.6 ~ 28.8V	32.4 ~ 39.6V	43.2 ~ 52.8V
	VOLTAGE TOLERANCE Note.3	±4.0%	±4.0%	±3.0%	±1.5%	±1.0%	±1.0%	±1.0%	±1.0%
	LINE REGULATION Note.4	±0.5%	±0.5%	±0.5%	±0.5%	±0.5%	±0.5%	±0.5%	±0.5%
	LOAD REGULATION Note.5	±2.5%	±2.5%	±2.0%	±1.0%	±0.5%	±0.5%	±0.5%	±0.5%
	SETUP, RISE TIME	1300ms, 50ms/230VAC 1300ms,50ms/115VAC at full load							
	HOLD UP TIME (Typ.)	16ms/230VAC 12ms/115VAC at full load							
INPUT	VOLTAGE RANGE	90 ~ 132VAC / 180 ~ 264VAC by switch 240 ~ 370VDC (switch on 230VAC)							
	FREQUENCY RANGE	47 ~ 63Hz							
	EFFICIENCY (Typ.)	79.5%	81.5%	83.5%	85%	86%	88%	88.5%	89%
	AC CURRENT (Typ.)	6.8A/115VAC 3.4A/230VAC							
	INRUSH CURRENT (Typ.)	60A/115VAC 60A/230VAC							
	LEAKAGE CURRENT	<2mA / 240VAC							
PROTECTION	OVER LOAD	110 ~ 140% rated output power							
		Protection type : Hiccup mode, recovers automatically after fault condition is removed							
	OVER VOLTAGE	3.8 ~ 4.45V	4.6 ~ 5.4V	5.75 ~ 6.75V	13.8 ~ 16.2V	18 ~ 21V	28.8 ~ 33.6V	41.4 ~ 46.8V	55.2 ~ 64.8V
		Protection type : Hiccup mode, recovers automatically after fault condition is removed							
	OVER TEMPERATURE	Hiccup mode, recovers automatically after fault condition is removed							
FUNCTION	FAN ON/OFF CONTROL (Typ.)	RTH3≧50℃ FAN ON, ≦40℃ FAN OFF							
ENVIRONMENT	WORKING TEMP.	-25 ~ +70℃ (Refer to "Derating Curve")							
	WORKING HUMIDITY	20 ~ 90% RH non-condensing							
	STORAGE TEMP., HUMIDITY	-40 ~ +85℃, 10 ~ 95% RH							
	TEMP. COEFFICIENT	±0.03%/℃ (0 ~ 50℃)							
	VIBRATION	10 ~ 500Hz, 5G 10min./1cycle, 60min. each along X, Y, Z axes							
SAFETY	SAFETY STANDARDS	UL60950-1 approved							
	WITHSTAND VOLTAGE	I/P-O/P:3KVAC I/P-FG:2KVAC O/P-FG:0.5KVAC							
	ISOLATION RESISTANCE	I/P-O/P, I/P-FG, O/P-FG:100M Ohms/500VDC / 25℃/ 70% RH							
OTHERS	MTBF	327.9K hrs min. MIL-HDBK-217F (25℃)							
	DIMENSION	215*115*30mm (L*W*H)							
	PACKING	0.76Kg; 15pcs/12.4Kg/0.78CUFT							

NOTE

1. All parameters NOT specially mentioned are measured at 230VAC input, rated load and 25℃ of ambient temperature.
2. Ripple & noise are measured at 20MHz of bandwidth by using a 12" twisted pair-wire terminated with a 0.1uf & 47uf parallel capacitor.
3. Tolerance : includes set up tolerance, line regulation and load regulation.
4. Line regulation is measured from low line to high line at rated load.
5. Load regulation is measured from 0% to 100% rated load.
6. Length of set up time is measured at cold first start. Turning ON/OFF the power supply very quickly may lead to increase of the set up time.
7. The 150% peak load capability is built in for up to 1 second for 12~48V.LRS-350 will enter hiccup mode if the peak load is delivered for over 1 second and will recover once it resumes to the rated current level(115VAC/230VAC).
8. The ambient temperature derating of 5℃/1000m is needed for operating altitude greater than 2000m(6500ft).

Block Diagram

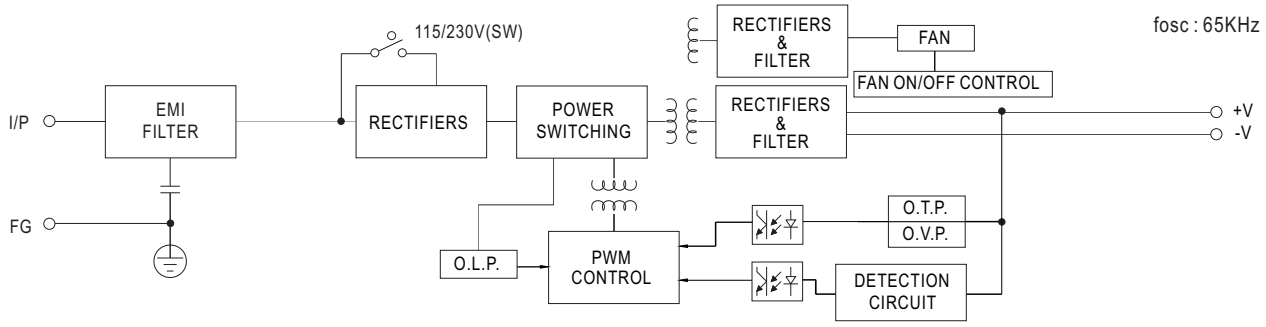

Derating Curve

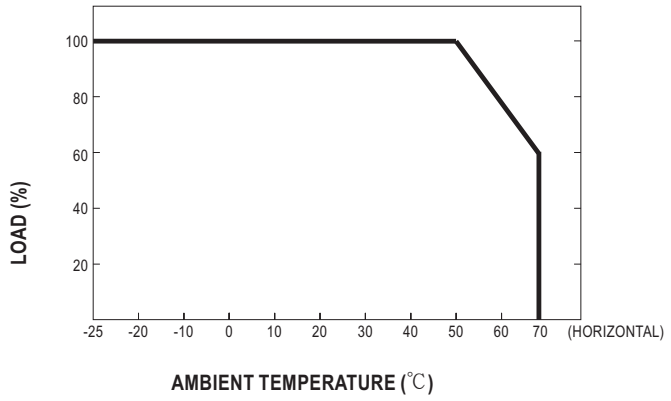

Static Characteristics

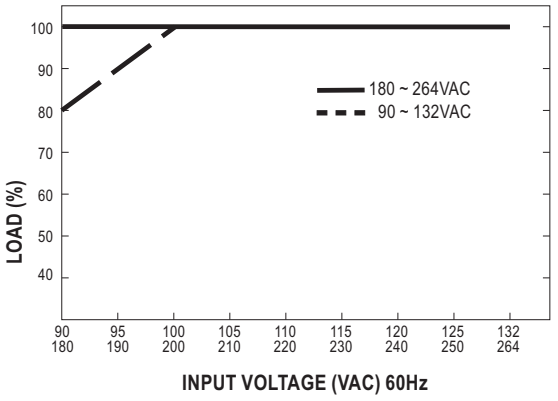

■ Mechanical Specification

Case No.207A Unit:mm

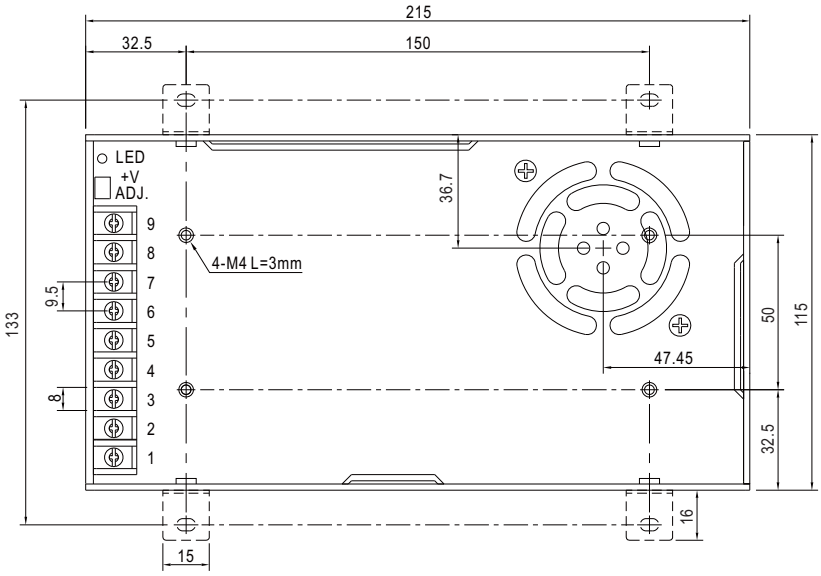

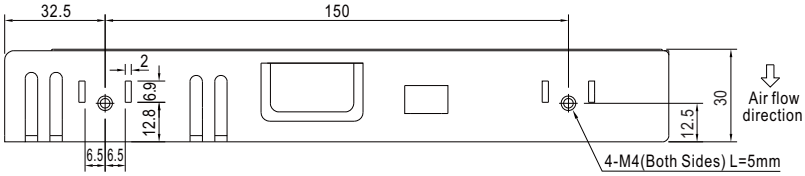

Terminal Pin No. Assignment :

Pin No.	Assignment	Pin No.	Assignment
1	AC/L	4~6	DC OUTPUT -V
2	AC/N	7~9	DC OUTPUT +V
3	FG ⏚		

■ Installation Manual

Please refer to : http://www.meanwell.com/webnet/search/InstallationSearch.html

Edal

SERIES B980

SILICON HIGH VOLTAGE ASSEMBLY BOARD

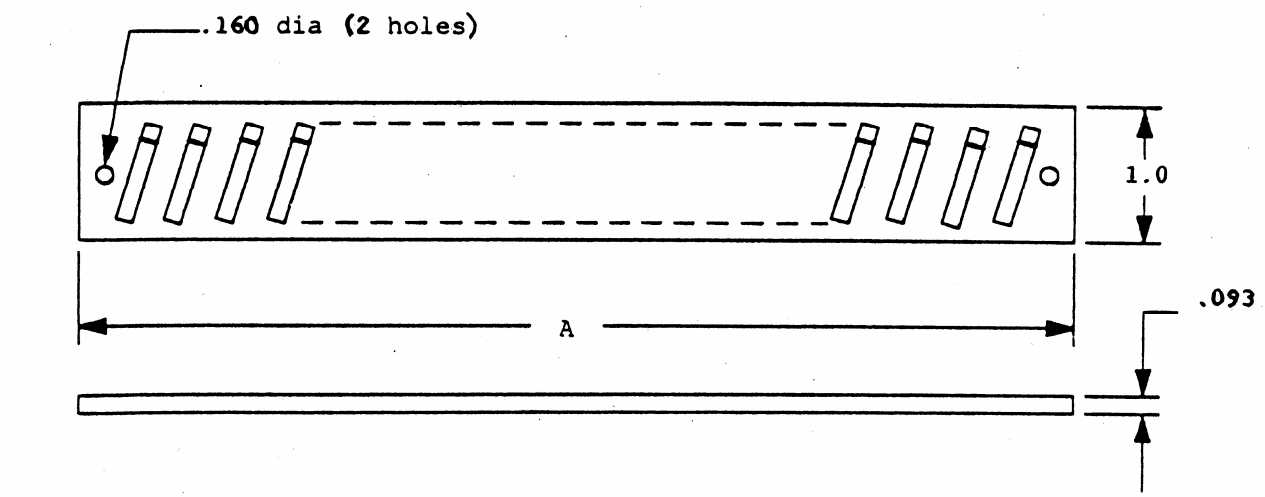

ELECTRICAL RATINGS

PART NUMBER	OPERATING PIV (kV)	TEST PIV (kV)	SINGLE CYCLE SURGE (AMPS)	AVG. RECTIFIED CURRENT **	MAX REVERSE CURRENT @ PIV	NUMBER OF DIODES PER BOARD	OVERALL LENGTH A
B980-100	100	125	25	220 mA	1 uA	16	6 1/16”
B980-125	125	150	25	220 mA	1 uA	19	6 1/6”
B980-150	150	175	25	220 mA	1 uA	22	6 1/6”

CENTER TO CENTER MOUNTING HOLE 5 ¾ “

** TESTED IN OIL @ 55° C

(203) 467-2591 TEL
(203) 469-5928 FAX
Email: Info@ edal.com
Internet:http://www.edal.com

EDAL industries, inc.
51 Commerce St. East Haven, CT 06512

Edal

SERIES B412

Miniature High Voltage Silicon Rectifiers

Smaller in size than other high voltage rectifiers, compact tubular construction and flexible leads facilitate circuit mounting and provide excellent thermal conductivity. These units are ideally suited for commercial and industrial applications including high voltage power supplies, electrostatic applications, cathode ray tubes, oscilloscopes, TV, display, X-ray and laser. Diodes used consist of double diffused junctions, bonded selected and pre-tested for uniform electrical characteristics. Compact, rugged, tubular construction eliminates sharp edges to reduce corona common to rectangular packages. Series B412 units meet moisture resistance requirements of MIL Standard 202A, Method 106. A varied operating range is available from 5,000 volts to 50,000 volts PIV, 5mA to 25mA and available in both standard and fast recovery series.

Electrical Ratings

Maximum Allowable One Cycle Surge Current (60 Hz single phase non-recurrent at rated PRV and no load)	4 amps
Maximum Reverse Current at PIV	
25 ^{o} C	1 ua*
100 ^{o} C	40 ua*

*fast recovery series 2 ua and 100 ua. Maximum reverse recovery time trr @ If =2 ma and Ir = 4 ma. Recovery to 1.0 ma – 250 nanoseconds

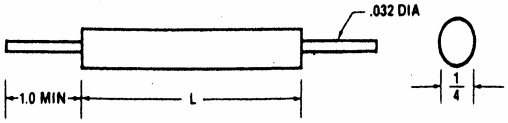

Standard Series / Fast Recovery Series

EDAL P/N* AVG. FWD CURRENT I_o AT 55°C			PIV VOLTS	MAX. FWD VOLTAGE DROP AT 25°C & I_o VOLTS	L IN.	EDAL P/N* AVG. FWD CURRENT I_o AT 55°C			PIV VOLTS	MAX. FWD VOLTAGE DROP AT 25°C & I_o VOLTS	L IN.
5 ma	10 ma	25ma				5 ma	10 ma	25 ma			
B412-5-5	B412-5-10	B412-5-25	5000	12	1.0	BR412-5-5	BR412-5-10	BR412-5-25	5000	15	1.0
B412-7-5	B412-7-10	B412-7-25	7000	12	1.0	BR412-7-5	BR412-7-10	BR412-7-25	7000	15	1.0
B412-10-5	B412-10-10	B412-10-25	10000	18	1.0	BR412-10-5	BR412-10-10	BR412-10-25	10000	30	1.0
B412-12-5	B412-12-10	B412-12-25	12000	18	1.0	BR412-12-5	BR412-12-10	BR412-12-25	12000	30	1.0
B412-15-5	B412-15-10	B412-15-25	15000	35	2.0	BR412-15-5	BR412-15-10	BR412-15-25	15000	60	2.0
B412-20-5	B412-20-10	B412-20-25	20000	35	2.0	BR412-20-5	BR412-20-10	BR412-20-25	20000	60	2.0
B412-25-5	B412-25-10	B412-25-25	25000	35	2.0	BR412-25-5	BR412-25-10	BR412-25-25	25000	60	2.0
B412-30-5	B412-30-10	B412-30-25	30000	50	3.0	BR412-30-5	BR412-30-10	BR412-30-25	30000	90	3.0
B412-40-5	B412-40-10	B412-40-25	40000	50	3.0	BR412-40-5	BR412-40-10	BR412-40-25	40000	90	3.0
B412-50-5	B412-50-10	B412-50-25	50000	70	5.0	BR412-50-5	BR412-50-10	BR412-50-25	50000	120	5.0

* Standard product lines are also available in 50 ma and 100 ma ratings. Other values are available upon request.

(203) 467-2591 TEL
(203) 469-5928 FAX
Email: Info@edal.com
Internet:http://www.edal.com

EDAL industries, inc.
51 Commerce St. East Haven, CT 06512

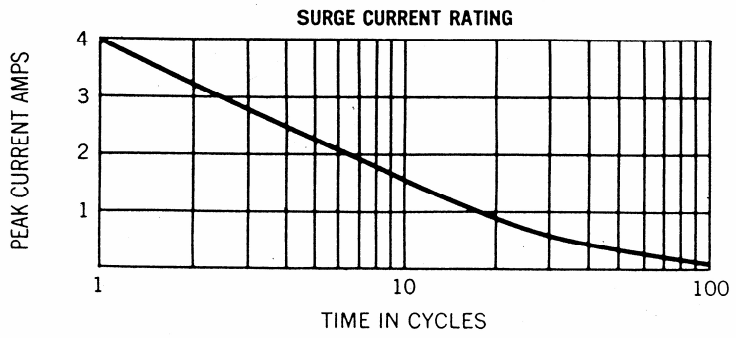

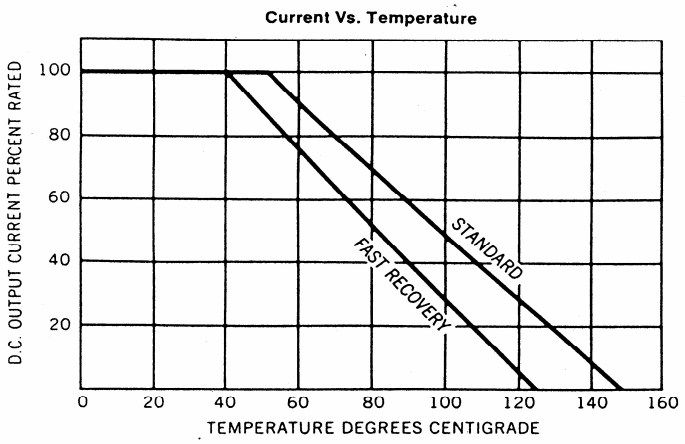

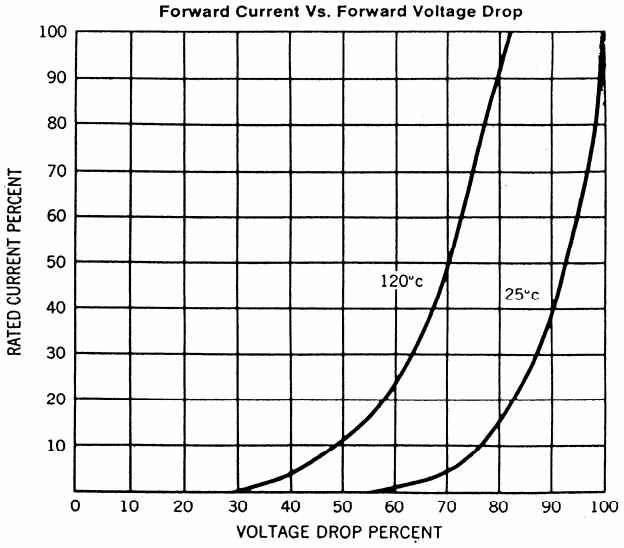

(203) 467-2591 TEL
(203) 469-5928 FAX
Email: Info@edal.com
Internet:http://www.edal.com

EDAL industries, inc.
51 Commerce St. East Haven, CT 06512

SLM 300W-1200W HIGH VOLTAGE MODULE

SPELLMAN HIGH VOLTAGE ELECTRONICS CORPORATION

- ***Compact & Lightweight***
- ***Models from 1kV-70kV, 300W, 600W AND 1200W***
- ***Universal Input, Power Factor Corrected***
- ***Low Cost Modular Design***
- ***Standard Digital Interfaces: USB, Ethernet and RS-232***
- ***CE Compliant, UL Recognized***

www.spellmanhv.com/manuals/SLM

Spellman's SLM Series of high voltage modules are designed for OEM applications up to 70kV at 1200 watts. Its universal input, small package size and choice of three standard digital interfaces simplifies integrating the SLM into your system design. Models are available in either positive or negative polarity. The SLM is fully arc and short protected. Excellent regulation specifications are provided along with outstanding stability performance.

TYPICAL APPLICATIONS

Capacitor Charging
HiPot Testing
CRT Testing
Electrostatics
E Beam Systems
CW Lasers

FIRMWARE CONFIGURATIONS

STANDARD BASED FEATURES

AOL	Adjustable Overload Trip
AT	Arc Trip
NAD	No Arc Detect
NSS	No Slow Start
PSS	Programmable Slow Start
RFR	Remote Fault Reset
RMI	Remote Mode Indicators
ROV	Remote Overvoltage Adjust

SPECIFICATIONS

Input Voltage:
Power factor corrected input, ≥0.98
90-264Vac, 47-63 Hertz, for 300 watt units
180-264Vac, 47-63 Hertz for 600 and 1200 watt units

Output Voltage:
11 models—1kV to 70kV

Output Polarity:
Negative or positive, specify at time of order

Local Indicators:
Arc, HV On, Temp Error, OVP, I Mode
Power On, OC, Reg Error

Power:
3 power ranges available—300, 600 and 1200 watts.
Other power levels available on special order.

Voltage Regulation:
≤0.01% of rated output voltage over specified input voltage range
≤0.01% of rated output voltage for a full load change

Current Regulation:
≤0.01% of rated output current over specified input voltage range
≤0.01% of rated output current for a ±100µA for a full voltage change

Ripple:
≤0.2% rms of maximum rated voltage, measured with a 10 foot long HV cable

Stability:
≤50ppm/hr after a 2 hour warm up

Temperature Coefficient:
≤100ppm per degree C

Environmental:
Temperature Range:
Operating: 0˚C to 40˚C
Storage: -40˚C to 85˚C
Humidity:
20% to 85% RH, non-condensing.

Control Interface

Local Interface:
Potentiometers are provided to adjust voltage and current.

Remote Interface: USB, Ethernet and RS-232 are standard, implemented with 12 bits of resolution.
All digital monitors have an accuracy specification of 2%.

Control Software: A VB GUI will be provided for RS-232/USB, the Ethernet interface will have an embedded applet for control.

HV Control Enable/Interlock:
A dry contact, hardware based interlock is provided for remote mode. In local mode this I/O is the enable.

Monitor Signals:
Voltage and current monitor signals are scaled 0-10Vdc equals 0-100% of full scale, accuracy is 1%.

Cooling:
Forced air

Dimensions:
300/600 watts:
4.75˝H X 6˝W X 12˝D (120.65mm x 152.4mm x 304.8mm)
1200 watts:
4.75˝H X 12˝W X 12˝D (120.65mm x 304.8mm x 304.8mm)

Weight:
300/600 watts: 14 pounds (6.35kg)
1200 watts: 26 pounds (11.8kg)

Spellman High Voltage Electronics Corporation
Corporate Headquarters
Hauppauge, New York USA
+1-631-630-3000 FAX: +1-631-435-1620
e-mail: sales@spellmanhv.com
www.spellmanhv.com

128035-001 REV. P

Input Line Connector:
IEC320 cord set with integrated EMI filter

Output Cable:
A detachable 10' (3.3m) long shielded HV cable is provided

Regulatory Approvals:
Compliant to 204/108/EC, the EMC Directive and 2006/95/EC, the Low Voltage Directive. UL/CUL recognized, File 227588. RoHS compliant.

SLM SELECTION TABLE- 300W

300 Watt		
kV	mA	Model
1	300	SLM1*300
3	100	SLM3*300
5	60	SLM5*300
10	30	SLM10*300
15	20	SLM15*300
20	15	SLM20*300
30	10	SLM30*300
40	7.5	SLM40*300
50	6	SLM50*300
60	5	SLM60*300
70	4.28	SLM70*300

*Specify "P" for positive polarity or "N" for negative polarity

SLM SELECTION TABLE- 600W

600 Watt		
kV	mA	Model
1	600	SLM1*600
3	200	SLM3*600
5	120	SLM5*600
10	60	SLM10*600
15	40	SLM15*600
20	30	SLM20*600
30	20	SLM30*600
40	15	SLM40*600
50	12	SLM50*600
60	10	SLM60*600
70	8.56	SLM70*600

*Specify "P" for positive polarity or "N" for negative polarity

SLM SELECTION TABLE- 1200W

1200 Watt		
kV	mA	Model
1	1200	SLM1*1200
3	400	SLM3*1200
5	240	SLM5*1200
10	120	SLM10*1200
15	80	SLM15*1200
20	60	SLM20*1200
30	40	SLM30*1200
40	30	SLM40*1200
50	24	SLM50*1200
60	20	SLM60*1200
70	17.14	SLM70*1200

*Specify "P" for positive polarity or "N" for negative polarity

SLM ANALOG INTERFACE— J2 15 PIN MALE D CONNECTOR

PIN	SIGNAL	SIGNAL PARAMETERS
1	Power Supply Fault	Open Collector, 35V @ 10mA Maximum
2	Current Program In	0 to 10V=0 to 100% Rated Output, Zin=10MΩ
3	Voltage Program In	0 to 10V=0 to 100% Rated Output, Zin=10MΩ
4	NC	No Connection
5	Local Voltage Prog.	Multi-turn front panel potentiometer
6	NC	No Connection
7	Local Current Prog.	Multi-turn front panel potentiometer
8	Voltage Monitor	0 to 10V=0 to 100% Rated Output, Zout =4.99k, 1%
9	Signal Ground	Ground
10	Current Monitor	0 to 10V=0 to 100% Rated Output, Zout =4.99k, 1%
11	HV Enable Input	Connect to Pin 12 to HV Enable Supply
12	HV Enable Output	+15V @ Open, ≤15mA @ Closed
13	NC	No Connection
14	HV On Output Signal	Open Collector, 35V @10mA Maximum
15	Spare	No Connection

RS-232 DIGITAL INTERFACE— J3 9 PIN FEMALE D CONNECTOR

PIN	SIGNAL	SIGNAL PARAMETERS
1	NC	No Connection
2	TX out	Transmit Data
3	RX in	Receive Data
4	NC	No Connection
5	SGND	Ground
6	NC	No Connection
7	NC	No Connection
8	NC	No Connection
9	NC	No Connection

USB DIGITAL INTERFACE— J4 4 PIN USB "B" CONNECTOR

PIN	SIGNAL	SIGNAL PARAMETERS
1	VBUS	+5 Vdc
2	D-	Data -
3	D+	Data +
4	GND	Ground

ETHERNET DIGITAL INTERFACE— J5 8 PIN RJ45 CONNECTOR

PIN	SIGNAL	SIGNAL PARAMETERS
1	TX+	Transmit Data +
2	TX-	Transmit Data -
3	RX+	Receive Data +
4	NC	No Connection
5	NC	No Connection
6	RX-	Receive Data -
7	NC	No Connection
8	NC	No Connection

Spellman High Voltage Electronics Corporation
Corporate Headquarters
Hauppauge, New York USA
+1-631-630-3000 FAX: +1-631-435-1620
e-mail: sales@spellmanhv.com
www.spellmanhv.com
128035-001 REV. P
Spellman High Voltage is an ISO 9001:2008 and ISO 14001:2004 registered company

DIMENSIONS: in.[mm]

300/600 Watt

BOTTOM VIEW

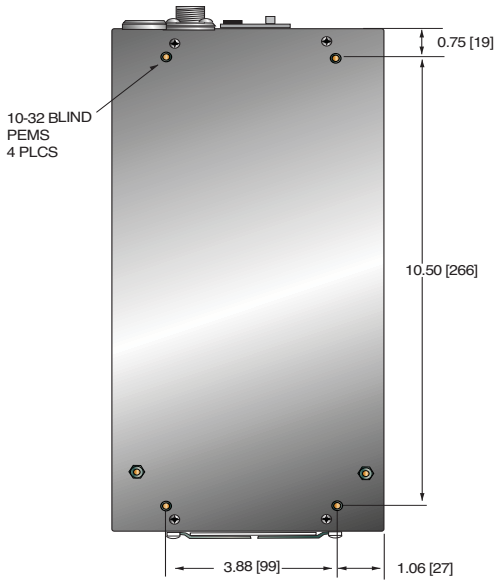

FRONT VIEW

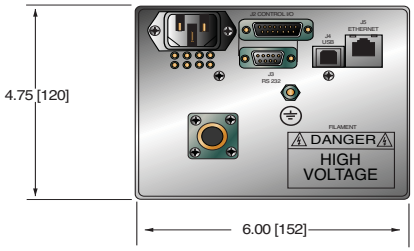

SIDE VIEW

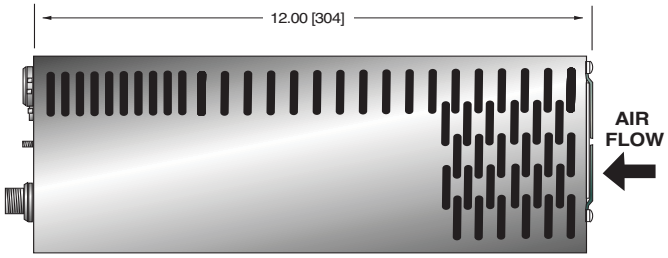

1200 Watt

BOTTOM VIEW

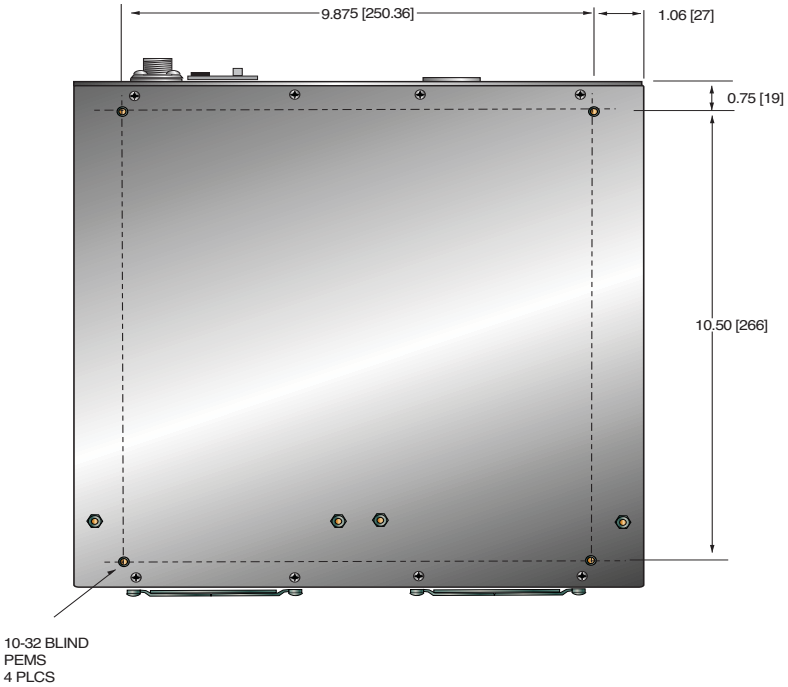

FRONT VIEW

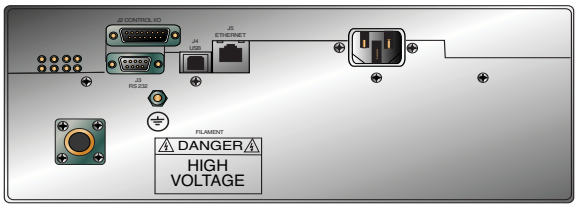

SIDE VIEW

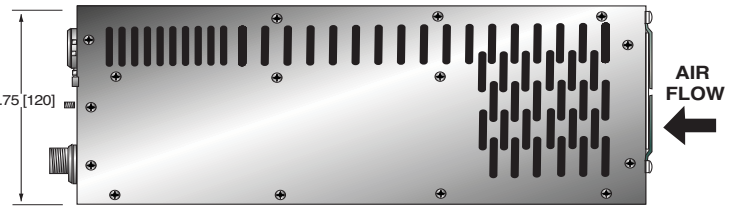

Instruction Manual

SLM SERIES

High Voltage Power Supply

MODEL :
SERIAL# :
DATE :

SPELLMAN
HIGH VOLTAGE ELECTRONICS CORPORATION
475 Wireless Blvd.
Hauppauge, New York, 11788

+1(631) 630-3000*FAX: +1(631) 435-1620*
E-mail: **sales@spellmanhv.com**
Website: www.spellmanhv.com

IMPORTANT SAFETY PRECAUTIONS

SAFETY

THIS POWER SUPPLY GENERATES VOLTAGES THAT ARE DANGEROUS AND MAY BE FATAL. OBSERVE EXTREME CAUTION WHEN WORKING WITH THIS EQUIPMENT.

High voltage power supplies must always be grounded.

Do not touch connections unless the equipment is off and the Capacitance of both the load and power supply is discharged.

Allow five minutes for discharge of internal capacitance of the power supply.

Do not ground yourself or work under wet or damp conditions.

SERVICING SAFETY

Maintenance may require removing the instrument cover with the power on.

Servicing should be done by qualified personnel aware of the electrical hazards.

WARNING note in the text call attention to hazards in operation of these units that could lead to possible injury or death.

CAUTION notes in the text indicate procedures to be followed to avoid possible damage to equipment.

WICHTIGE SICHERHEITSHINWEISE

SICHERHEIT

DIESES HOCHSPANNUNGSNETZTEIL ERZEUGT LEBENSGEFÄHRLICHE HOCHSPANNUNG.
SEIN SIE SEHR VORSICHTIG BEI DER ARBEIT MIT DIESEM GERÄT.

Das Hochspannungsnetzteil muß immer geerdet sein.

Berühren Sie die Stecker des Netzteiles nur, wenn das Gerät ausgeschaltet ist und die elektrischen Kapazitäten des Netzteiles und der angeschlossenen Last entladen sind.

Die internen Kapazitäten des Hochspannungsnetzteiles benötigen ca. 5 Minuten, um sich zu entladen.

Erden Sie sich nicht, und arbeiten Sie nicht in feuchter oder nasser Umgebung.

SERVICESICHERHEIT

Notwendige Reparaturen können es erforderlich machen, den Gehäusedeckel während des Betriebes zu entfernen.

Reparaturen dürfen nur von qualifiziertem, eingewiesenem Personal ausgeführt werden.

“WARNING” im folgenden Text weist auf gefährliche Operationen hin, die zu Verletzungen oder zum Tod führen können.

“CAUTION” im folgenden Text weist auf Prozeduren hin, die genauestens befolgt werden müssen, um eventuelle Beschädigungen des Gerätes zu vermeiden.

PRECAUTIONS IMPORTANTES POUR VOTRE SECURITE

CONSIGNES DE SÉCURITÉ

CETTE ALIMENTATION GÉNÈRE DES TENSIONS QUI SONT DANGEUREUSES ET PEUVENT ÊTRE FATALES.
SOYEZ EXTRÊMENT VIGILANTS LORSQUE VOUS UTILISEZ CET ÉQUIPEMENT.

Les alimentations haute tension doivent toujours être mises à la masse.

Ne touchez pas les connectiques sans que l'équipement soit éteint et que la capacité à la fois de la charge et de l'alimentation soient déchargées.

Prévoyez 5 minutes pour la décharge de la capacité interne de l'alimentation.

Ne vous mettez pas à la masse, ou ne travaillez pas sous conditions mouillées ou humides.

CONSIGNES DE SÉCURITÉ EN CAS DE REPARATION

La maintenance peut nécessiter l'enlèvement du couvercle lorsque l'alimentation est encore allumée.

Les réparations doivent être effectuées par une personne qualifiée et connaissant les risques électriques.

Dans le manuel, les notes marquées « **WARNING** » attire l'attention sur les risques lors de la manipulation de ces équipements, qui peuvent entrainer de possibles blessures voire la mort.

Dans le manuel, les notes marquées « **CAUTION** » indiquent les procédures qui doivent être suivies afin d'éviter d'éventuels dommages sur l'équipement.

IMPORTANTI PRECAUZIONI DI SICUREZZA

SICUREZZA

QUESTO ALIMENTATORE GENERA TENSIONI CHE SONO PERICOLOSE E POTREBBERO ESSERE MORTALI.
PONI ESTREMA CAUTELA QUANDO OPERI CON QUESO APPARECCHIO.

Gli alimentatori ad alta tensione devono sempre essere collegati ad un impianto di terra.

Non toccare le connessioni a meno che l'apparecchio sia stato spento e la capacità interna del carico e dell'alimentatore stesso siano scariche.

Attendere cinque minuti per permettere la scarica della capacità interna dell'alimentatore ad alta tensione.

Non mettere a terra il proprio corpo oppure operare in ambienti bagnati o saturi d'umidità.

SICUREZZA NELLA MANUTENZIONE.

Manutenzione potrebbe essere richiesta, rimuovendo la copertura con apparecchio acceso.

La manutenzione deve essere svolta da personale qualificato, coscio dei rischi elettrici.

Attenzione alle **AVVERTENZE** contenute nel manuale, che richiamano all'attenzione ai rischi quando si opera con tali unità e che potrebbero causare possibili ferite o morte.

Le note di **CAUTELA** contenute nel manuale, indicano le procedure da seguire per evitare possibili danni all'apparecchio.

Table of Contents

Chapter 1

INTRODUCTION

1.1 Description of the SLM Series

The SLM Series of high voltage generator modules are designed for OEM applications up to 70kV and up to 1200watts. Its universal input, small package size and choice of three standard digital interfaces simplifies integrating the SLM into your system. DSP based control circuitry provides excellent regulation, along with outstanding stability performance. User programmable firmware option makes the operation of the SLM flexible.

The dramatically reduced size of the SLM module, compared to traditional high voltage modules, is obtained by a state of the art off-line resonant converter. The resonant converter utilizes a unique control scheme, which allows constant frequency operation while maintaining high efficiency. The high efficiency is obtained by zero current switching (ZCS) resonant control. High operating frequency, typically 50 kHz, allows for low ripple and excellent dynamic response capabilities.

The DC output voltage and current are controllable over the full range of operation. Monitoring and control signals are provided for simple, yet flexible control of the power supply. The SLM series operates from 90 - 265Vac, at 50/60 Hz single phase for the 300Watt models and 180–264Vac, at 50/60 Hz single phase for the 600Watt and 1200Watt models. The input is power factor corrected and the SLM series operates at full power continuous. The ambient temperature must be kept below the maximum rating as specified in 1.2. The standard warranty applies to the modules. Consult factory about the warranty for custom SLM modules.

1.2 SLM Specifications

- **Input Voltage:**

  90-264Vac 47-63Hz, for 300watt models

  180-264Vac 47-63Hz, for 600watt models

  180-264Vac 47-63Hz, for 1200watt models

- **Power Factor:**

  FL: ≥ 0.99

- **Output Voltage:**

  22 models: 1kv to 70kv

- **Voltage Regulation:**

  ≤ 0.01% of rated output voltage over specified input voltage range
  ≤ 0.01% of rated output voltage for a full load change

- **Current Regulation:**

  ≤ 0.01% of rated output current over specified input voltage range
  ≤ 0.01% of rated output current for a ±100µA for a full voltage change

- **Ripple**: ≤ 0.2% rms of maximum rated voltage, measured with a 10 foot long HV cable

- **Polarity:** Positive or Negative polarity with respect to ground. (Specify at time of ordering).

- **Stability:** ≤ 50ppm/hr after a 2 hour warm up

- **Temperature Coefficient**: ≤ 100ppm / °C.

- **Temperature:**

  Operating: 0°C to 40°C
  Storage: -40°C to +85°
  Humidity: 20% to 85% RH, non-condensing.

Control Interface

- **Local Interface:** Voltage and current are externally programmable over the entire range from zero to maximum rating via 0-10VDC input.

- **+10Vdc Reference:** A +10Vdc reference is provided for local programming via two potentiometers to be used to adjust voltage and current.

- **Remote Interface:** USB, Ethernet and RS232 are standard, implemented with 12 bits of resolution. All digital monitors have an accuracy specification of 2%.

- **Control Software:** A VB GUI will be provided for RS-232/USB, the Ethernet interface will have an embedded applet for control.

- **Monitor Signals:**
  Voltage and current monitor signals are scaled 0-10Vdc equals 0-100% of full scale. Accuracy is 1%.

- **HV Control Enable/Interlock:**
  A dry contact, hardware based interlock is provided for remote mode. In local mode this I/O is the enable.

IMPORTANT

This control signal in not a safety interlock and should not be used for protection from high voltage generation for safety purposes.

- **Cooling:**
  Forced air
- **Dimensions:**
  4.75″ H X 6″ W X 12″ D (120.65mm x 152.4mm x 304.8mm)
- **Weight:**
  14 pounds (5.44kg)
- **Input Line Connector:**
  IEC320 cord set with integrated EMI filter
- **Output Cable:**
  A detachable 10’ (3.3m) long shielded HV cable is provided

1.3 Standard Features

The SLM series incorporates several standard features designed to optimize user operation.

Standard Firmware Configurable Features:

Slow Start:
Provides a gradual increase in high voltage output until the maximum set point is reached. This ramp time can be configured in the firmware from 0.1 seconds to 60 seconds, and is stored internally in the SLM memory. The factory default setting is 5 seconds.

Adjustable Overload Trip: AOL
The overload trip protection feature shuts down the high voltage output when the current exceeds the limit set by the current control. The DSP inhibits the generation of high voltage and reverts the unit to HV OFF mode, illuminating the OVER CURRENT indicator. This can be enabled in the firmware and is stored internally in the SLM memory. When AOL is disabled the default overcurrent trip point is 110% of full-scaled output. The factory default setting for AOL is disabled.

Remote Overvoltage Adjust: ROV
The overvoltage trip protection feature shuts down the high voltage output when the voltage exceeds the limit configured in the firmware. The DSP inhibits the generation of high voltage and reverts the unit to HV OFF mode, illuminating the OVER VOLTAGE indicator. This can be enabled in the firmware and is adjustable from 0% to 110% of full-scaled output voltage. The select values are stored internally in the SLM memory. When ROV is disabled the default overvoltage trip point is 110% of full-scaled output. The factory default setting for ROV is disabled.

ARC Trip: AT

The SLM provides firmware configurable arc detection. The user can set the arc detection parameters to custom fit their requirements. The follow parameters are programmable in the firmware and are stored internally in the SLM memory:

Arc Count:
This sets how many arc’s are require within the selected time period to cause an arc shutdown. It is programmable from 1 arc to 20 arc. The factory default setting is 8 arc.

Time Period:
This sets the time period that the selected arc count must occur within to cause an arc shutdown .It is programmable from 1 second to 60 seconds. The factory default setting is 20 seconds.

Quench Time:
This sets the length of time that the high voltage is shutdown to quench the arc after an arc occurs. It is programmable from 100ms to 500ms. The factory default setting is 500ms.

Re-Ramp:
After an arc occurs, the kV output will slow start at the programmed ramp time. If Re-ramp is disabled then there will be no ramping after an arc. The factory default setting is enabled.

The SLM will not accept Arc Count and Time Period setting that exceed 1 arc per second.

No Arc Detect: NAD
When No Arc Detect mode (NAD) is enabled, the HVPS has no arc shutdown protection. The HVPS is designed to handle an arc rate of 1 arc per second. **Exceeding 1 arc per second could cause damage to the HVPS. HVPS failure caused by excessive arc will not be covered under the warranty**. The factory default setting for NAD is disabled.

Watchdog Timer
If there is no communication between the HVPS and the host computer for more than 10 seconds the HV output will shutdown and the Watchdog Timer fault will be sent via the digital communication when and if communication is resumed. This can be enabled via the digital communication and is defaulted to disable upon power up.

Standard Input Features:

Power Factor and Universal Input: The input voltage of the SLM can operate within the range from 90Vac to 265Vac for the 300Watt model and at 180–264Vac, for the 600Watt model. The power factor is actively corrected across this entire range and is better than 0.99 at full load.

Internal EMI Filter and Fuse Protection: An internal EMI filter and fuse provide protection against line voltage surges and power supply faults.

Remote Operating Features

Remote Control: USB, Ethernet and RS232 are standard. A provided G.U.I allow user to control the unit via RS232 and USB interfaces. An imbedded Applet web browser allow user to control the unit via Ethernet. Refer to SLM digital protocol spec for details.

Remote Monitor: Allows remote monitoring of the Output voltage, current, HV On clock counter, and user configurable firmware features via the USB, Ethernet or RS232.

Remote Programming: Allows remote programming of the output voltage, current and user configurable firmware features via the USB, Ethernet or RS232.

HV Enable/Interlock: In local mode, allows remote ON/OFF control of the high voltage. In remote mode, the hardware based dry contact closure must be closed in order to enable the high voltage via the USB, Ethernet or RS232.

1.4 System Status and Fault Diagnostic Display

If a fault occurs, the power supply will revert to the Shutdown mode indicated by extinguishing of HV ON LED and via RS-232 as HV OFF. To reset a fault in local mode the enable must be reset. To reset a fault in remote mode a HV ON or a RESET FAULTS command must be sent via the RS-232, USB or Ethernet.

- **OVER CURRENT FAULT:** Indicates the over current protection circuitry has caused the high voltage to turn off. This fault will occur if the output current exceeds 110% of full scale. If AOL is enable this fault will occur when the current exceeds the current program set point. This fault is indicated by illumination of over current LED status on the front panel and via RS-232, USB or Ethernet as Over Current.
- **OVERVOLTAGE:** Indicates the over voltage protection circuitry has caused the high voltage to turn off. This fault will occur if the output voltage exceeds 110% of full scale. If ROV is enable this fault will occur when the voltage exceeds the programmed ROV setpoint. This fault is indicated by over voltage LED status on the front panel and via the RS-232, USB or Ethernet as Over Voltage.
- **ARC FAULT**: Indicates that the programmed arc count was exceeded within programmed time period. This fault is indicated by steady state illumination of Arc Fault LED status on front panel and via RS-232, USB or Ethernet as Arc Fault. The LED will pulse for each arc, but will be a steady state ON if a shutdown occurs.
- **REGULATION ERROR:** Indicates a failure in the voltage, current or power regulation circuitry. This fault usually occurs when there is a lack of output power to maintain regulation. This fault is indicated by illumination of the Regulation Error LED status on front panel and via RS-232, USB or Ethernet as Under Current.
- **OVER TEMPERATURE:** Indicates either a failure in the cooling system that would cause the internal heat sink temperature to exceed the operating range or the ambient temperature to exceed 40 degrees C, resulting in shutdown of HV. This fault is indicated by Over Temperature LED status on the front panel and via RS-232, USB or Ethernet as Over Temperature.
- **PS Fault Indication:** PS Faults an open collector output with a 1k ohm impedance on J2-1, indicates that a faults has occurred. High = no faults
- **HV On Indication:** HV On Signal is an open collector output with a 1k ohm impedance on J2-14, indicates that HV is enabled. High = HV OFF
- **HV On LED:** When the high voltage status is “On” state it is indicated by HV ON LED status on the front panel.

- **Power On LED:** When the input power is applied to the unit it is indicated by PWR ON LED status on the front panel.
- **I MODE:** Indicates the output current regulator circuit is maintaining current regulation. This is indicated by I Mode LED status on the front panel and via RS-232, USB or Ethernet as I Mode.

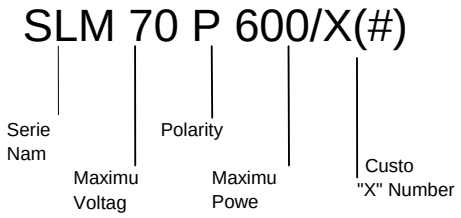

1.5 Interpreting the Model Number:

The model number of the power supply describes its capabilities. After the series name is:

(1) The maximum voltage in kilovolts.
(2) The polarity of the output – positive (P), or negative (N).
(3) The maximum output in watts.
(4) Custom "X" number representing details listed in a separate specification control drawing.

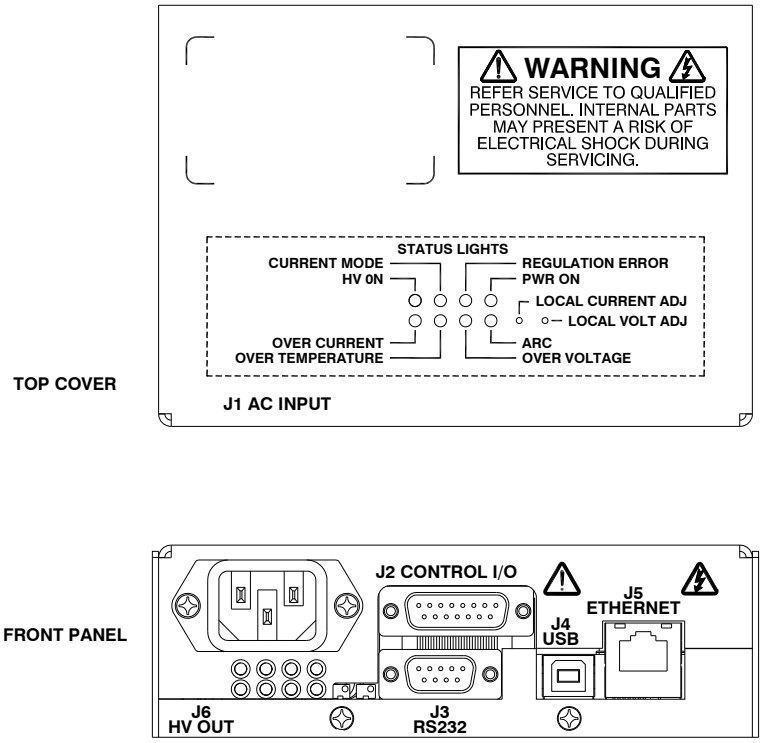

Figure 1.1 LED Legend and Connector Assignment (shown 300W and 600W)

Chapter 2

INSPECTION AND INSTALLATION

Initial inspection and preliminary checkout procedures are recommended. For safe operation, please follow the step-by-step procedures described in Chapter 3, Operating Instructions.

2.1 Initial Inspection

Inspect the package exterior for evidence of damage due to handling in transit. Notify the carrier and Spellman immediately if damage is evident. Do not destroy or remove any of the packing material used in a damaged shipment. After unpacking, inspect the panel and chassis for visible damage.

Fill out and mail the Warranty Registration card accompanying the unit. Standard SLM high voltage power supplies and components are covered by warranty. Custom and special order models (with an X suffix in the model number) are also covered by warranty.

2.2 Mechanical Installation

The SLM series module power supplies are designed for installation into existing or newly developed OEM equipment. The power supply can also easily fit into bench top applications or test set requirements. Standard unit dimensions are shown in Figure 2.1

For custom mounting requirements or specific package size requirements consult Spellman's Sales Department. Spellman has many package designs available, or can design a specific enclosure for your requirements.

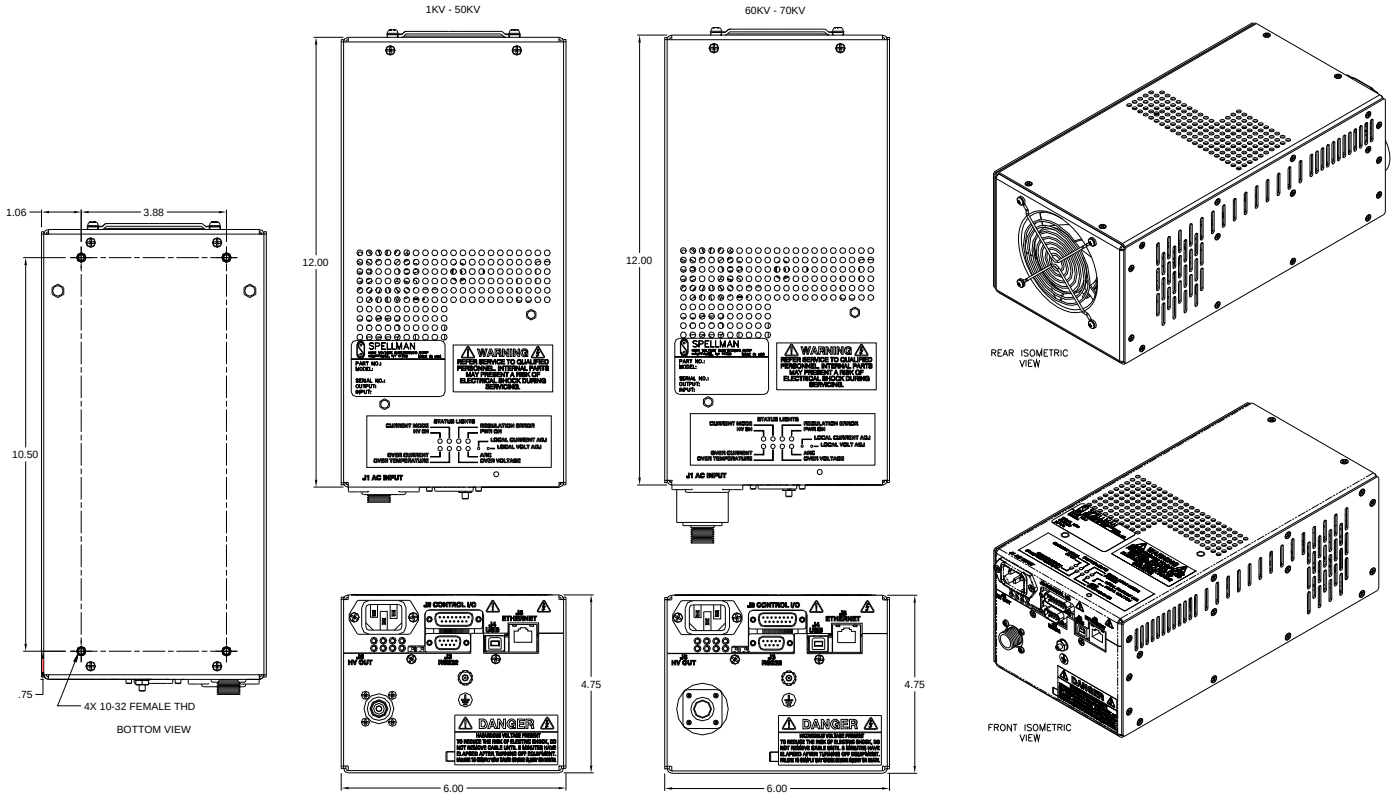

Figure 2.1 Unit Dimensions (300W and 600W)

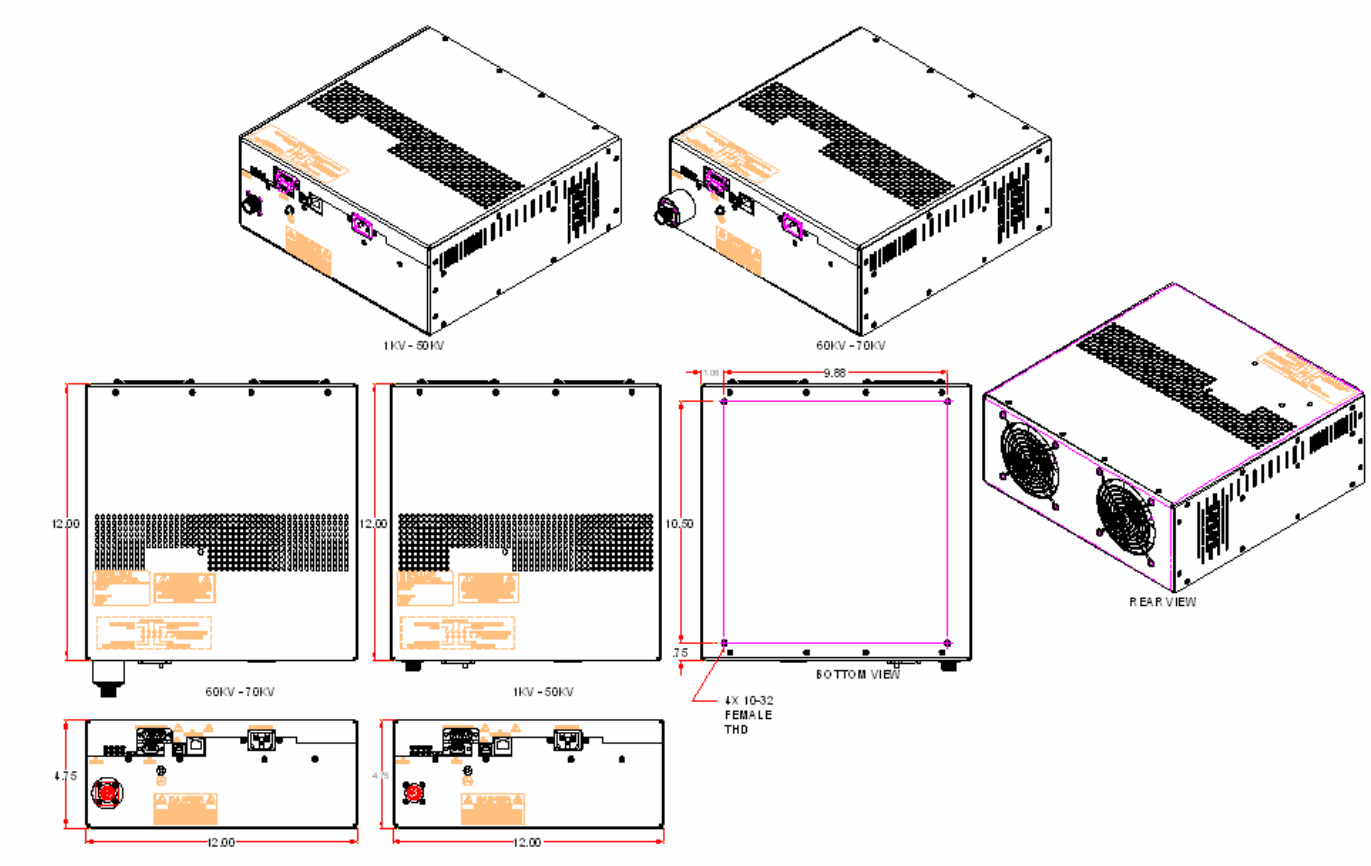

Figure 2.2 Unit Dimensions (1200W)

Chapter 3

OPERATING INSTRUCTIONS

3.1 Operation

WARNING

THIS EQUIPMENT GENERATES DANGEROUS VOLTAGES THAT MAY BE FATAL. PROPER GROUNDING OF ALL HIGH VOLTAGE EQUIPMENT IS ESSENTIAL.

IMPORTANT:

Before connecting the power supply to the AC line, follow this step-by-step procedure.

Do not connect the power supply to the AC line until Step F is reached.

Failure to follow these procedures may void the warranty.

A) Insure that the high voltage cable is properly installed and terminated to the load. Insure that all circuits connected to the high voltage output are safely interlocked against accidental contact. Insure external load is discharged.

B) Check the input voltage rating on the serial nameplate of the supply and make certain that this is the rating of the available power source

C) **PROPER GROUNDING TECHNIQUE:** The chassis of high voltage power supplies must be grounded, preferably to a water system ground using copper pipe or other earth ground. A ground stud is provided on the front panel. See Figure 3.1 for a typical operating setup. The return line from the load should be connected to the power supply chassis. Using a separate external ground at the load is not recommended. An IEC 320 connector is provided for connection to the line voltage source. A standard line cord is also provided.

D) **Hook-up:** Connect control and monitoring connections as described in this manual.

E) For initial turn-on, program the voltage and current for zero output. Connect the enable/disable signal to disable.

F) The input power cable may now be connected to the AC power line.

G) Enable the power supply via the enable/disable hardware based, dry contact closure.

H) Slowly program the output voltage and current to desired level. Monitor the output voltage and current via the monitoring test points. Note equipment operation is normal, i.e. load is behaving as predicted.

I) To turn high voltage off, use the enable/disable signal. If equipment is to be kept off for extended periods, disconnect power supply from line voltage source.

WARNING

AFTER TURNOFF, DO NOT HANDLE THE LOAD UNTIL THE CAPACITANCE HAS BEEN DISCHARGED!
LOAD CAPACITANCE MAY BE DISCHARGED BY SHORTING TO GROUND.

WARNING

THE VOLTAGE MONITOR ON THE POWER SUPPLY FRONT PANEL DOES NOT READ THE OUTPUT VOLTAGE WHEN THE POWER IS TURNED OFF, EVEN IF A CHARGE STILL EXISTS ON THE LOAD.

CAUTION

ALWAYS OPERATE THE UNIT WITH THE COVER ON. DO NOT ATTEMPT TO ACCESS OR REPAIR ANY INTERNAL CIRCUITS. DANGEROUS AND LETHAL VOLTAGES ARE GENERATED INSIDE THE MODULE.

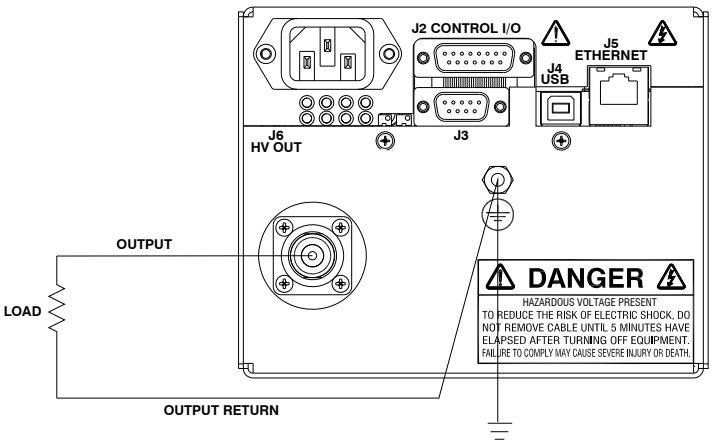

Figure 3.1 Proper Grounding Technique

3.2 Standard Features

A note on remote interface circuitry and remote signal grounding: whenever possible, electrical isolation should be provided when interfacing with any high voltage power supply. For enable/disable signal connections, an isolated relay or optocoupler should be used. For PS Fault indication an optocoupler should be used. If possible, analog programming and monitoring signals should be isolated via analog isolation amplifiers. Spellman application engineers are available to assist in interface circuitry design. All interface cables should be properly shielded. All power supply signals should be referenced to the power supplies signal ground or power supply chassis ground

Local Programming potentiometers: The voltage and current controls on the front panel can be used as follows: For local current control, jump J2-2 to J2-7. For local voltage control, jump J2-3 to J2-5. See Figure 3.2.

LOCAL PROGRAMMING: Allows local adjustment of the output voltage and current level via an external voltage source. 0-10Vdc signal is supplied to pin 3 of the J2 for voltage programming and 0-10 Vdc signal is supplied to Pin 2 J2 for current programming. Programming signals should be referenced to Pin 9 of J2, signal ground. By adjusting the voltage source from 0 volts (zero output) to 10 Vdc (full rated output) the desired output can be selected. See Figure 3.3 for wiring diagram and specifications.

Local Monitoring: Monitor outputs are made available for monitoring the voltage and current output. The monitor outputs are always positive regardless of the output polarity, where zero 0 to 10 Vdc equals 0-100% of output. See Figure 3.4 for monitoring wiring and see data sheet for pin outs.

HV Enable/Interlock: In Local Mode allows ON/OFF control of the high voltage. The hardware based dry contact closure must be closed in to enable the high voltage. In Remote Mode this I/O acts as an Interlock. The hardware based dry contact closure must be closed in order to enable the high voltage via the USB, Ethernet or RS232. This can be done by connecting pins 11 and 12 on J2. See Figure 3.5.

REMOTE PROGRAMMING:

After establishing communication with the UUT as per the SLM Digital Protocol spec. Switch the UUT to Remote Mode by sending a Program Local/Remote Mode command (this is done automatically upon opening of the Spellman GUI/APPLET).If the unit is in Local Mode and enabled prior to switching it to Remote Mode, the UUT will shutdown and a P.S Fault indictor will occur when it is switch to Remote Mode. A clear command can be sent to clear this fault.

Remote Control: USB, Ethernet and RS232 are standard Refer to SLM Digital Protocol spec for Details.

Remote Monitor: Allows remote monitoring of the Output voltage and current via the USB, Ethernet or RS232.

Remote Programming: Allows remote programming of the Output voltage and current via the USB, Ethernet or RS232.

WARNING

It is extremely dangerous to use this circuit to inhibit high voltage generation for the purpose of servicing or approaching any area of load considered unsafe during normal use.

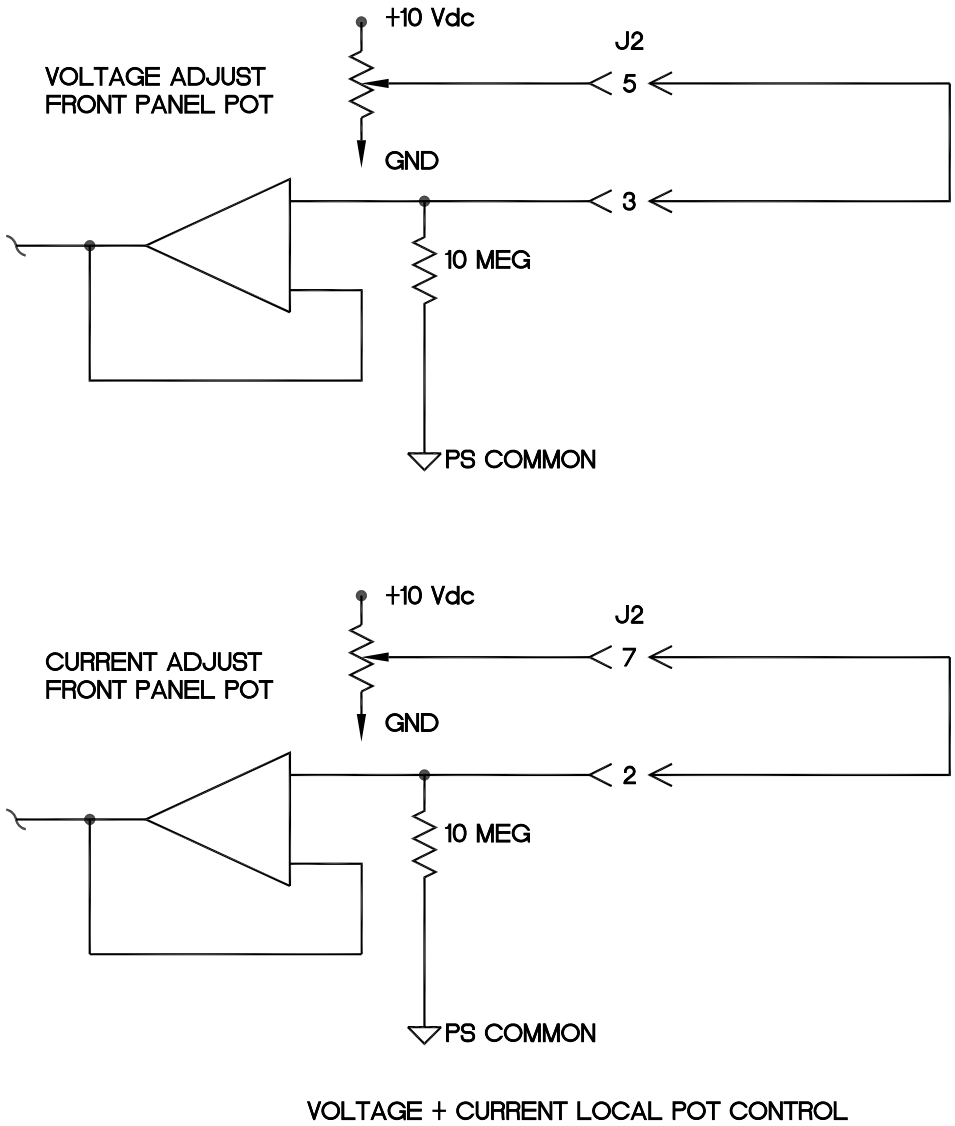

Figure 3.2 Local Programming Via Internal Front Panel Pot Voltage Source.

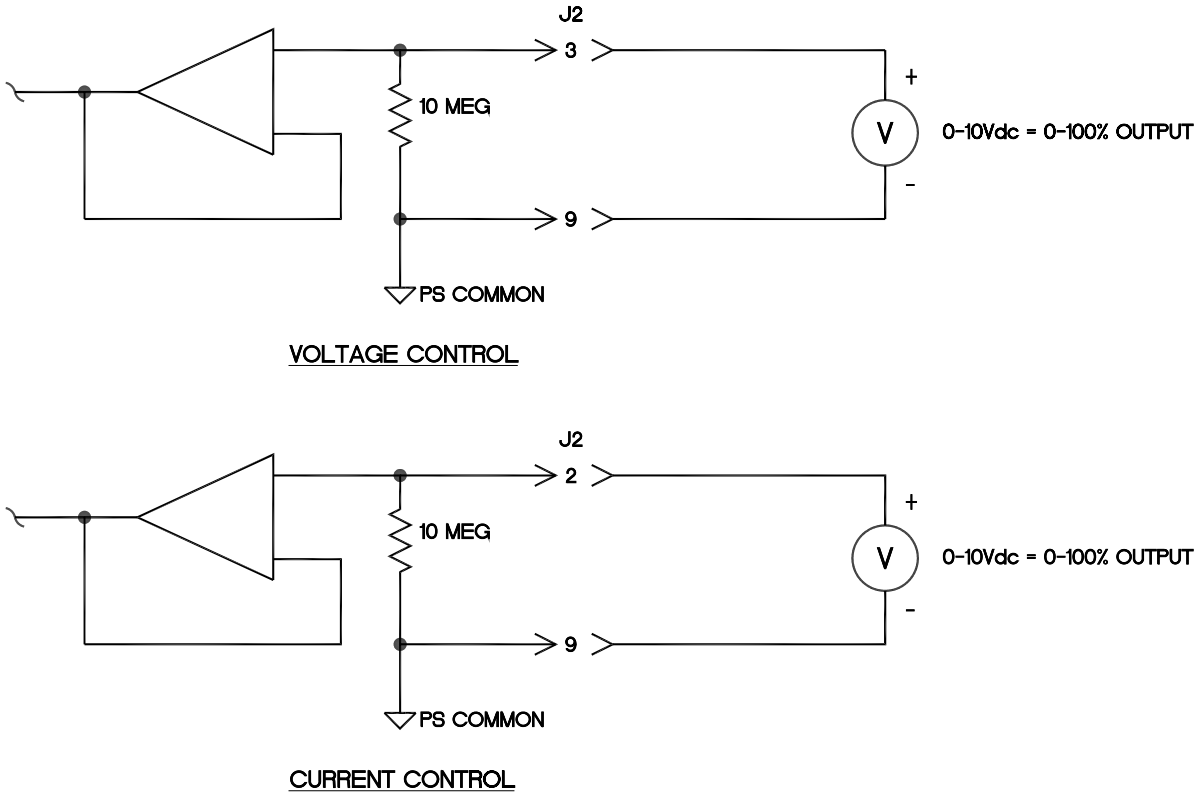

Figure 3.3 Local Programming via External Voltage Source

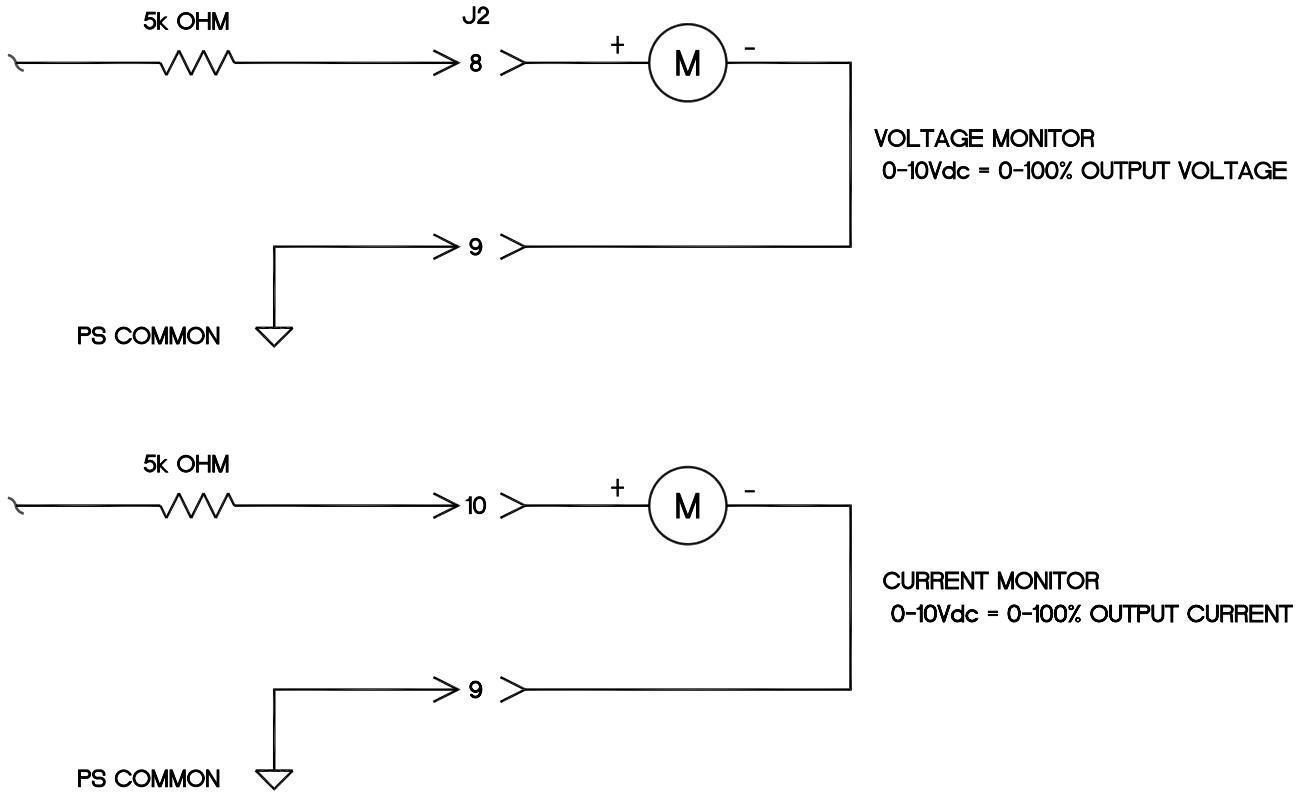

Figure 3.4 Remote Monitoring

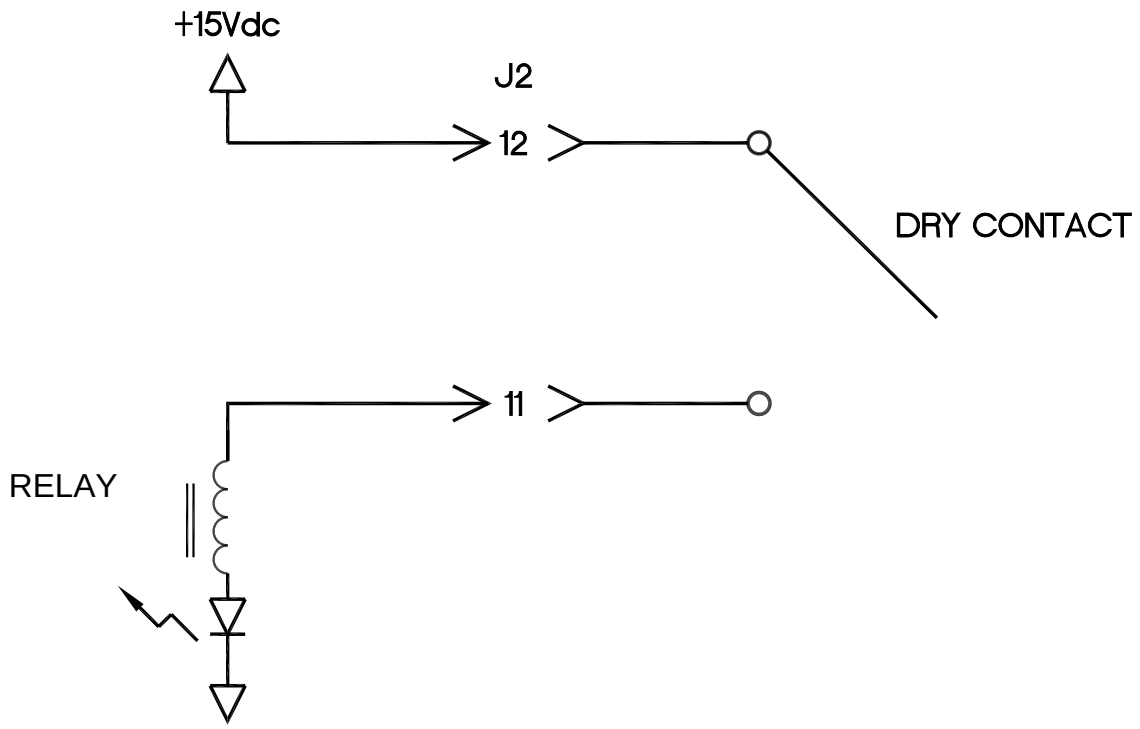

Figure 3.5 Enable/Interlock Logic Control

WARNING

It is extremely dangerous to use this circuit to inhibit high voltage generation for the purpose of servicing or approaching any area of load considered unsafe during normal use.

Chapter 4

PRINCIPLES OF OPERATION

The SLM Series of high voltage power supplies utilizes sophisticated power conversion technology. Advanced analog and power conversion techniques are used in the SLM series. The intention of the Principles of Operation is to introduce the basic function blocks that comprise the SLM power supply. For details on a specific circuit, consult Spellman's Engineering Department.

The SLM power supply is basically an AC to DC power converter. Within the power supply, conversions of AC to DC then to high frequency AC, then to high voltage DC take place.

Typical SLM power supplies comprise a few basic building blocks. These are: 1) AC to DC rectifier, 2) Power Factor correction boost circuitry 3) High frequency quasi-resonant inverter, 4) High voltage transformer and rectifier circuits, and 5) Control and monitoring circuits. The following is a brief description of each building block.

4.1 Power Factor and Associated Circuits

The SLM series can operate from 90 - 265Vac, for the 300Watt model and 180 –264Vac for the 600 and 1200Watt models. The input voltage is connected via a typical IEC 320 type input connector. An internal EMI filter and fuse housing is an integral part of the SLM module. The input circuits actively correct the power factor.

The input line voltage is applied to a current limit device to reduce the initial inrush current. The input line voltage is converted to a 400Vdc voltage via an active PFC Converter.

WARNING

The energy levels used and generated by the power supply can be lethal! Do not attempt to operate the power supply unless the user has a sufficient knowledge of the dangers and hazards of working with high voltage. Do not attempt to approach or touch any internal or external circuits or components that are connected or have been connected to the power supply. Be certain to discharge any stored energy that may be present before and after the power supply is used. Consult IEEE recommended practices for safety in high voltage testing #510-1983.

4.2 High Frequency Inverter

The SLM is a resonant converter operating in a zero current switching, series resonant, parallel loaded topology. MOSFET transistors switch the 400 Vdc voltage to the resonant tank circuit. Typical operating frequency is in the range of 35-65 KHz depending on model. Control of the resonant circuit output is done by the low voltage control circuits, and are isolated by an isolated pulse transformer. The output of the resonant circuit is applied to the primary of the high voltage transformer.

4.3 High Voltage Circuits

The high voltage transformer is a step-up type. The secondary of the high voltage transformer is connected to the high voltage output circuit. The output circuit will vary depending upon the rated output voltage and a full wave Cockroft-Walton multiplier is used. A feedback signal is generated by the high voltage resistor divider. This feedback signal is sent to control circuits to provide voltage regulation and monitoring. A current sense resistor is connected at the low voltage end of the output circuit. The circuit sense signal is sent to the control circuits to provide current regulation and monitoring.

The high voltage output is connected to the output limiting resistors. These resistors limit the peak surge current in the event an arc or discharge occurs. The limiting resistor output is connected to the output connector provided.

WARNING

THE HVPS IS DESIGNED TO HANDLE AN ARC RATE OF 1 ARC PER SECOND, EXCEEDING 1 ARC PER SECOND COULD CAUSE DAMAGE TO THE HVPS. HVPS FAILURE CAUSED BY EXCESSIVE ARC WILL NOT BE COVERED UNDER THE WARRANTY.

4.4 Control Circuits

Control circuits are used for regulation, monitoring, pulse-width, control, slow-start and inhibit control. Feedback signals are calibrated and buffered via general purpose OP-AMPS. Pulse width control is accomplished by a typical PWM type control I.C. Logic enable/disable is provided by a logic gate I.C. Regulators generate ± 15Vdc and 10Vdc. DSP based control circuitry provides excellent regulation, along with outstanding stability performance

WARNING

LINE VOLTAGE IS PRESENT WHENEVER THE POWER SUPPLY IS CONNECTED TO EXTERNAL LINE VOLTAGES. BE SURE TO DISCONNECT THE LINE CORD BEFORE OPENING THE UNIT. ALLOW 5 MINUTES FOR INTERNAL CAPACITANCE TO DISCHARGE BEFORE REMOVING ANY COVER.

4.5 Options

Due to the variations of models and options provided in the SLM series, details of actual circuits used may differ slightly from above descriptions. Consult Spellman's Engineering Department for questions regarding the principles of operations for the SLM series.

Chapter 5

5.1 Custom Designed Models X (#)

Units built to customer specifications are assigned an X number be the factory. If this unit is an X model, specification control sheet is added at the end of this instruction manual.

Chapter 6

MAINTENANCE

This section describes periodic servicing and performance testing procedures.

WARNING

THIS POWER SUPPLY GENERATES VOLTAGES THAT ARE DANGEROUS AND MAY BE FATAL.

OBSERVE EXTREME CAUTION WHEN WORKING WITH HIGH VOLTAGE.

6.1 Periodic Servicing

Approximately once a year (more often in high dust environments), disconnect the power to the unit. Use compressed air to blow dust out of the inside of the unit. Avoid touching or handling the high voltage assembly.

6.2 Performance Test

WARNING

HIGH VOLTAGE IS DANGEROUS. ONLY QUALIFIED PERSONNEL SHOULD PERFORM THESE TESTS.

High voltage test procedures are described in Bulletin STP-783, Standard Test Procedures for High Voltage Power Supplies. Copies can be obtained from the Spellman Customer Service Department. Test equipment, including an oscilloscope, a high impedance voltmeter, and a high voltage divider such as the Spellman HVD-100 is needed for performance tests. All test components must be rated for operating voltage.

6.3 High Voltage Dividers

High voltage dividers for precise measurements of output voltage with an accuracy up to 0.1% are available from Spellman. The HVD-100 is used for voltages up to 100KV. The Spellman divider is designed for use with differential voltmeters or high impedance digital voltmeters. The high input impedance is ideal for measuring high voltage low current sources, which would be overloaded by traditional lower impedance dividers.

Chapter 7

FACTORY SERVICE

7.1 Warranty Repairs

During the Warranty period, Spellman will repair all units free of charge. The Warranty is void if the unit is worked on by other than Spellman personnel. See the Warranty in the rear of this manual for more information. Follow the return procedures described in Section 7.2. The customer shall pay for shipping to and from Spellman.

THE SLM HVPS IS DESIGNED TO HANDLE AN ARC RATE OF 1 ARC PER SECOND. EXCEEDING 1 ARC PER SECOND COULD CAUSE DAMAGE TO THE HVPS. HVPS FAILURE CAUSED BY EXCESSIVE ARC WILL NOT BE COVERED UNDER THE WARRANTY.

7.2 Factory Service Procedures

Spellman has a well-equipped factory repair department. If a unit is returned to the factory for calibration or repair, a detailed description of the specific problem should be attached.

For all units returned for repair, please obtain an authorization to ship from the Customer Service Department, either by phone or mail prior to shipping. When you call, please state the model and serial numbers, which are on the plate on the rear of the power supply, and the purchase order number for the repair. A Return Material Authorization Code Number (RMA Number) is needed for all returns. This RMA Number should be marked clearly on the outside of the shipping container. Packages received without an RMA Number will be returned to the customer. The Customer shall pay for shipping to and from Spellman.

A preliminary estimate for repairs will be given by phone by Customer Service. A purchase order for this amount is requested upon issuance of the RMA Number. A more detailed estimate will be made when the power supply is received at the Spellman Repair Center. In the event that repair work is extensive, Spellman will call to seek additional authorization from your company before completing the repairs.

7.3 Ordering Options and Modifications

Many of the options listed in Chapter 5 can be retrofitted into Spellman power supplies by our factory. For prices and arrangements, contact our Sales Department.

7.4 Shipping Instructions

All power supplies returned to Spellman must be sent shipping prepaid. Pack the units carefully and securely in a suitable container, preferably in the original container, if available. The power supply should be surrounded by at least four inches of shock absorbing material. Please return all associated materials, i.e. high voltage output cables, interconnection cables, etc., so that we can examine and test the entire system.

All correspondence and phone calls should be directed to:

Spellman High Voltage Electronics Corp.
475 Wireless Boulevard
Hauppauge, New York 11788
TEL: (631) 630-3000 FAX: (631) 435-1620
E-Mail: sales@Spellmanhv.com
http://www.spellmanhv.com

To obtain information on Spellman's product warranty please visit our website at:

http://www.spellmanhv.com/en/About/Warranty.aspx

Spellman®
High Voltage Electronics Corporation

SLM Digital Interface Manual

Ethernet
Serial – RS-232
Universal Serial Bus - USB

USA CHINA EUROPE JAPAN MEXICO

475 Wireless Boulevard • Hauppauge, New York 11788, USA • www.spellmanhv.com • T:+1 631.630.3000 • F:+1 631.435.1620

118080-001 REV B

Table Of Contents

WARNING

THIS EQUIPMENT GENERATES DANGEROUS VOLTAGES THAT MAY BE FATAL. PROPER GROUNDING OF ALL HIGH VOLTAGE EQUIPMENT IS ESSENTIAL.SEE SLM OWNERS MANUAL FOR PROPER GROUNDING TECHNIQUE AND SAFETY PRECAUTIONS BEFORE APPLING AC INPUT POWER TO THE SLM UNIT.

TO PREVENT DAMAGE TO THE HOST COMPUTER ,THE COMPUTER SHOULD BE GROUNDED TO THE UNIT.

1.0 SCOPE

This document applies to the communications interfaces on the SLM, assembly 460067.

2.0 FUNCTIONAL DESCRIPTION

The SLM provides 3 different types of digital communications interfaces:

- RS-232 on J3
- Ethernet (10/100-Base-T) on J5
- Universal Serial Bus on J4.

3.0 GETTING STARTED - INTERFACE WIRING AND PIN-OUTS

3.1 RS232 INTERFACE

The RS232C interface has the following attributes:

- 115K bits per second
- No Parity
- 8 Data Bits
- 1 Stop Bit
- No handshaking
- DB-9 connector as shown

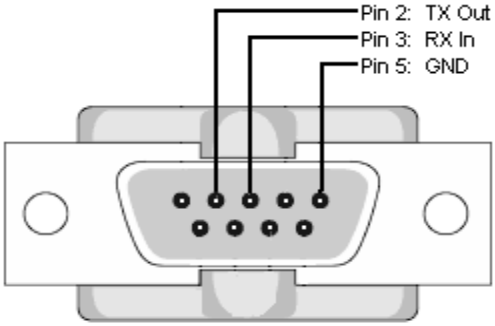

SIC Serial Port: DB-9 Male

Figure 1 – J3, RS-232 DB-9M pinout (front view)

PIN	DESCRIPTION
1	-
2	Tx Out
3	Rx In
4	-
5	Ground
6	-
7	-
8	-
9	-

3.2 ETHERNET INTERFACE

The Ethernet interface has the following attributes:

- 10/100-Base-T
- IP address can be set by the system integrator
- Network Mask can be set by the system integrator
- TCP Port Number can be set by the system integrator
- RJ-45 connector
- Network attachment via Crossover and Standard Ethernet cables.
- Supported Operating Systems: Windows 98 2ED, Windows 2000 (SP2), Windows NT (SP6), Windows XP Professional

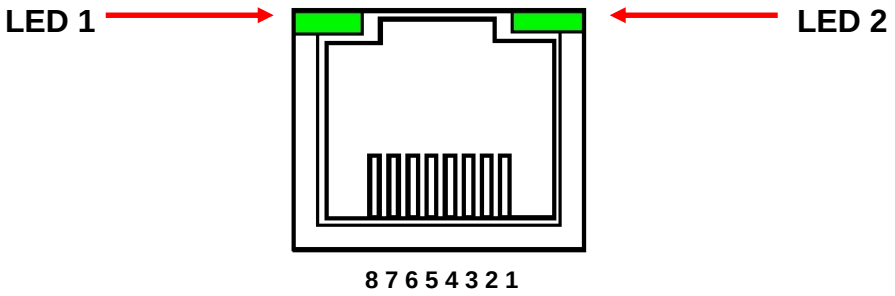

Figure 2 – J5, Ethernet RJ45 Jack (front view)

PIN	DESCRIPTION
1	TX+
2	TX-
3	RX+
4	-
5	-
6	RX-
7	-
8	-

The Ethernet RJ-45 has two LED indicators, as shown in Figure 2. The left LED, LED1 indicates that the network processor has a valid network link. The right LED, LED2 indicates network activity.

3.3 USB – UNIVERSAL SERIAL BUS INTERFACE

The USB interface has the following attributes:

- Compliant with USB 1.1 and USB 2.0 specifications
- Type B male connector
- Included driver can be communicated with via standard Windows serial communications methods

Figure 3 – J4, USB Type B (front view)

PIN	DESCRIPTION
1	Vbus +5V
2	D-
3	D+
4	Ground

3.4 RS-232 CABLING

A standard shielded RS-232 cable is used to connect the SLM serial port to the serial port on a standard personal computer. Please refer to the following chart.

PC to SLM Board Cable Details	
PC Connector (DB-9 Female)	SLM Connector (DB-9 Male)
Pin 2: RX In	Pin 2: TX Out
Pin 3: TX Out	Pin 3: RX In
Pin 5: Ground	Pin 5: Ground

3.5 ETHERNET CABLING

Shielded Category 5 (CAT5) Ethernet patch cables are used to connect the SLM to the host computer. There are two ways to connect to the SLM board via Ethernet: the first is to directly cable between the host and the SLM board, and the second is through the use of a switch, hub, or network.

A direct connection requires a non-standard cable where the wires are not run straight through. Please refer to the two cable ends shown below in figure 4.

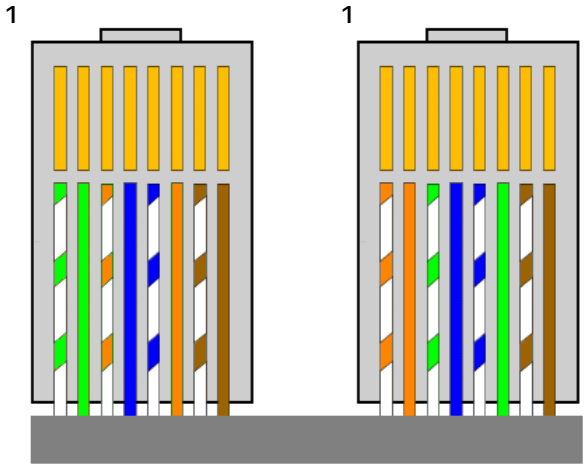

Figure 4 – Crossover Cable for Direct Connection

A standard connection through a hub, switch, or network uses a standard CAT5 patch cable. Please refer to the two cable ends shown below in figure 5.

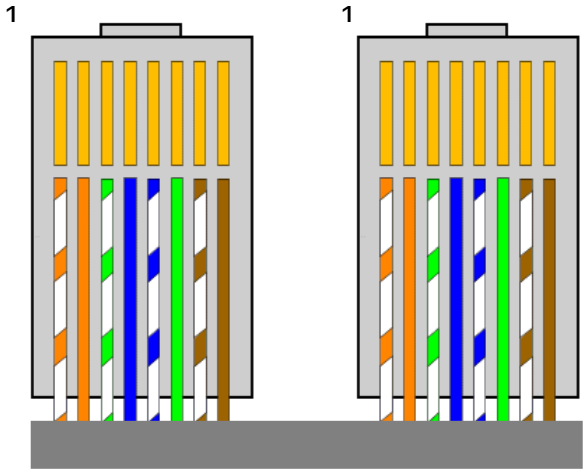

Figure 5 – Standard Straight Through Cable – Standard CAT5 Patch

3.6 USB CABLING

A high-quality double-shielded USB 2.0 Type A to B (host to slave) cable should be used in all applications. This type of cable is a standard PC to peripheral cable that utilizes full-size connectors.

Figure 6 – USB A-to-B cable

3.6.1 HIGH EMI ENVIRONMENTS

If the SLM USB interface is being used in a high-EMI environment, ferrites should be added to the USB cable. Figure 7 illustrates the possible combinations of ferrites that can be used to achieve acceptable operation under these conditions.

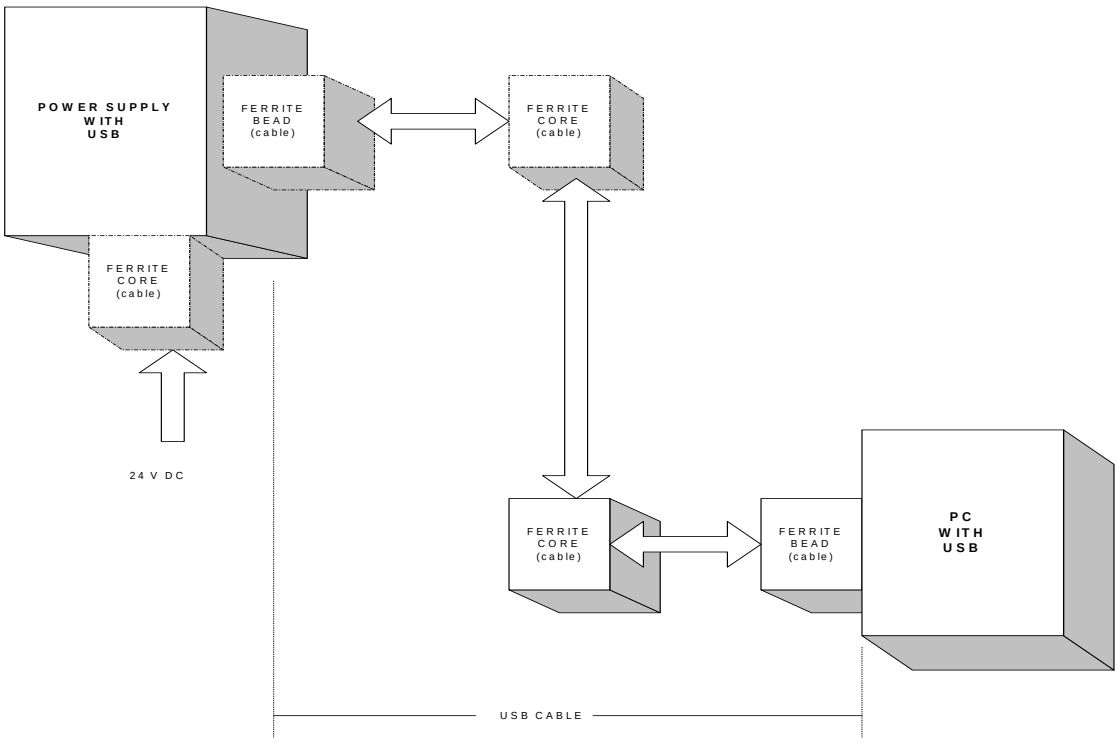

Figure 7 – Block Diagram of USB Cable Utilizing Ferrites

Ferrite beads should be attached to the USB cable next to the connectors – both sides should be installed. In extreme cases ferrite cores may be added where the cable is looped 3 or 4 times around the core as shown in figure 8. Cores of 1.5 to 2 inches should be used at both ends of the cable.

Figure 8 - Example of a USB Cable Using Ferrites

Please refer to the USB Interface Setup section, for an explanation of how USB works and why EMI may present a problem for this communications interface.

4.0 GETTING STARTED – SOFTWARE

The following sections detail how to create software to interface to the SLM communications interfaces.

4.1 RS-232

The RS-232 interface makes use of a standard 'command/response' communications protocol. See section 6.0 for the syntax of the serial interface protocol. The programmer should also review section 4.3 for programming considerations for the USB interface as the code is nearly identical for the RS-232 interface.

All software that addresses the RS-232 interface must adhere to the following parameters:

- A default Baud rate of 115.2K bps
- No Parity
- 8 Data Bits
- 1 Stop Bit
- No handshaking

The Baud rate can be changed to 115.2K ,57.6k,38.4k,19.2k or 9600 bps and stored in the unit.

4.1.1 Enabling Communications Objects in Visual Basic for RS-232

Communications in Microsoft Visual Basic 6.0 are directed to a control that abstracts the port. In the case of serial and USB we need Microsoft Comm Control 6.0. To enable this in your VB 6 project, go to:

Project -> Components

Then in the list make sure that Microsoft Comm Control 6.0 has a check next to it. The Comm Control Object should then appear in your toolbox. It will have an icon of a telephone and will be named: MSComm. This can be dragged and dropped into your application. You will then need to set the object's properties.

4.1.2 Configuring Communications in Visual Basic for RS-232

In order to configure the MSComm Object, first you must initialize it in the Object properties:

Settings	115200,n,8,1
Handshaking	0 – comNone

The application can be set to either default to a specific COM Port or the End User can be allowed to choose one for the particular PC.

For the “Default” scenario, include the following commands in the Form_Load() routine:

```
MSComm1.CommPort = portNumber
MSComm1.PortOpen = True
```

For the “Choice” scenario, place the above two commands in a selectable menu item.

4.2 ETHERNET

The SLM contains an embedded diagnostic web server that can be accessed through any standard web browser by browsing to the SLM's IP address. For example:

http://192.168.1.4

The Ethernet interface communicates using the following protocols:

- TCP/IP
- HTTP
- TFTP
- FTP

4.2.1 Diagnostic Web Server

The diagnostic web server can control and monitor an SLM equipped power supply from a web browser. It displays operating status of the Power Supply and allows the unit to be configured in real time. The application consists of three web pages; a page displaying contact information, a license agreement, and a monitoring and control applet that is at the heart of this application. In order for the Web Server to work with the latest Java release, an exception has to be made in java. The following steps explain how to enter an Applet's designated IP address to Java's exception list. We used Java 7 Update 60 and Internet Explorer 10.

1. The exception feature of Java allows to run an Applet which doesn't meet all of Java's security checks. To use it, you need to open the Java Configure menu and enter the IP address assigned to the device which hosts the Applet. To open the Java Configure menu, you click on the Windows icon and look for the Configure Java program; if it doesn't show on the Task Bar, select All Programs and look for the Java folder and click it. You should see the Configure Java option, click on it.


CCStudio v3.3
Microsoft Visual Studio 2010
Adobe Reader X
Microsoft Visual Basic 6.0
Standard XRV GUI
Remote Desktop Connection
Print CD
P-CAD SCH Viewer
LANDesk Antivirus
Configure Java
All Programs
Search programs and files
Felix Valladares
Documents
Pictures
Music
Computer
Control Panel
Devices and Printers
Default Programs
Help and Support
Shut down

2. When the Java Control panel appears, click on Security tab.

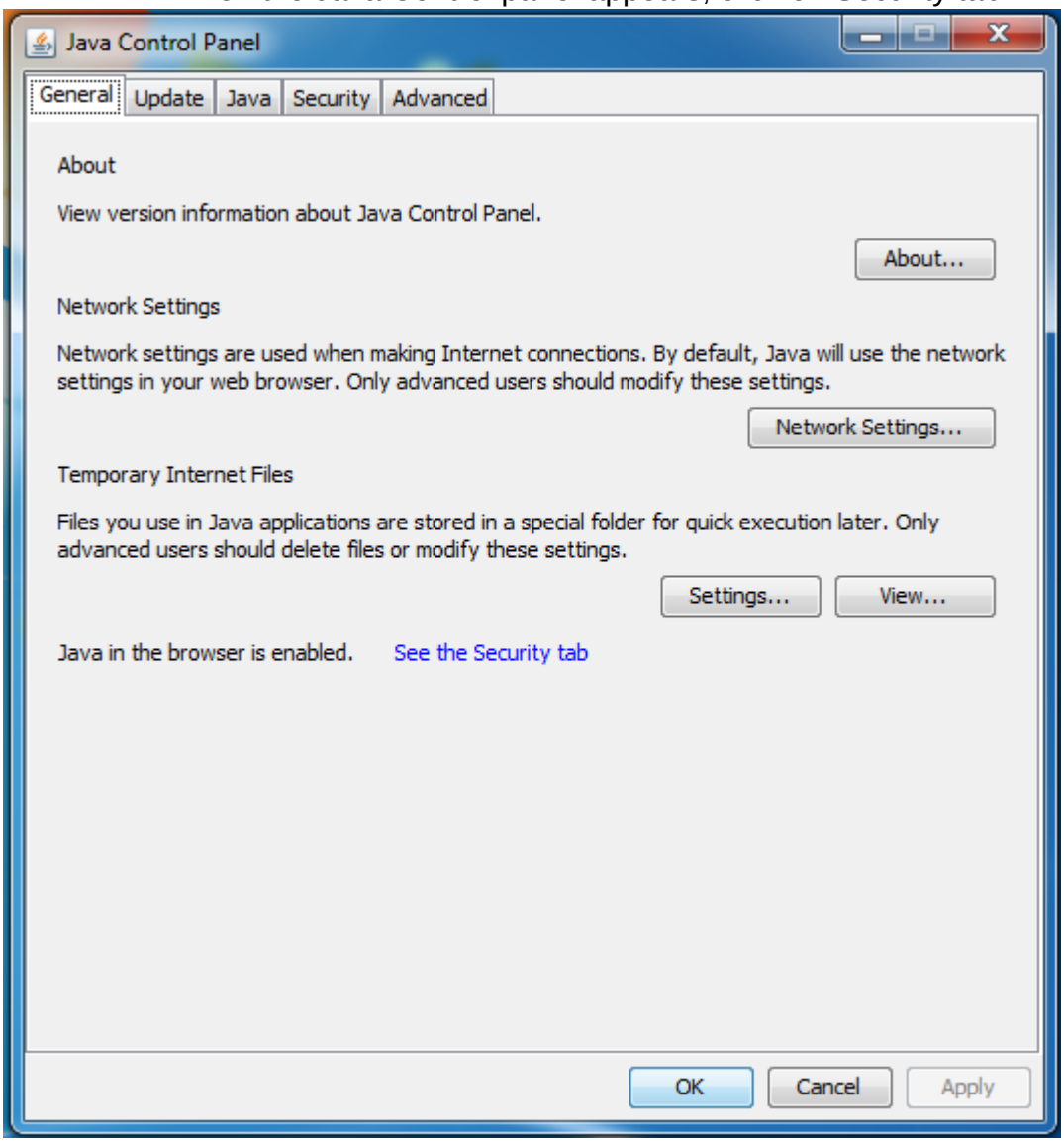

3. On the blank text box enter the IP address assigned to your unit as shown below. The IP address shown in the picture below is the default factory configuration IP address.

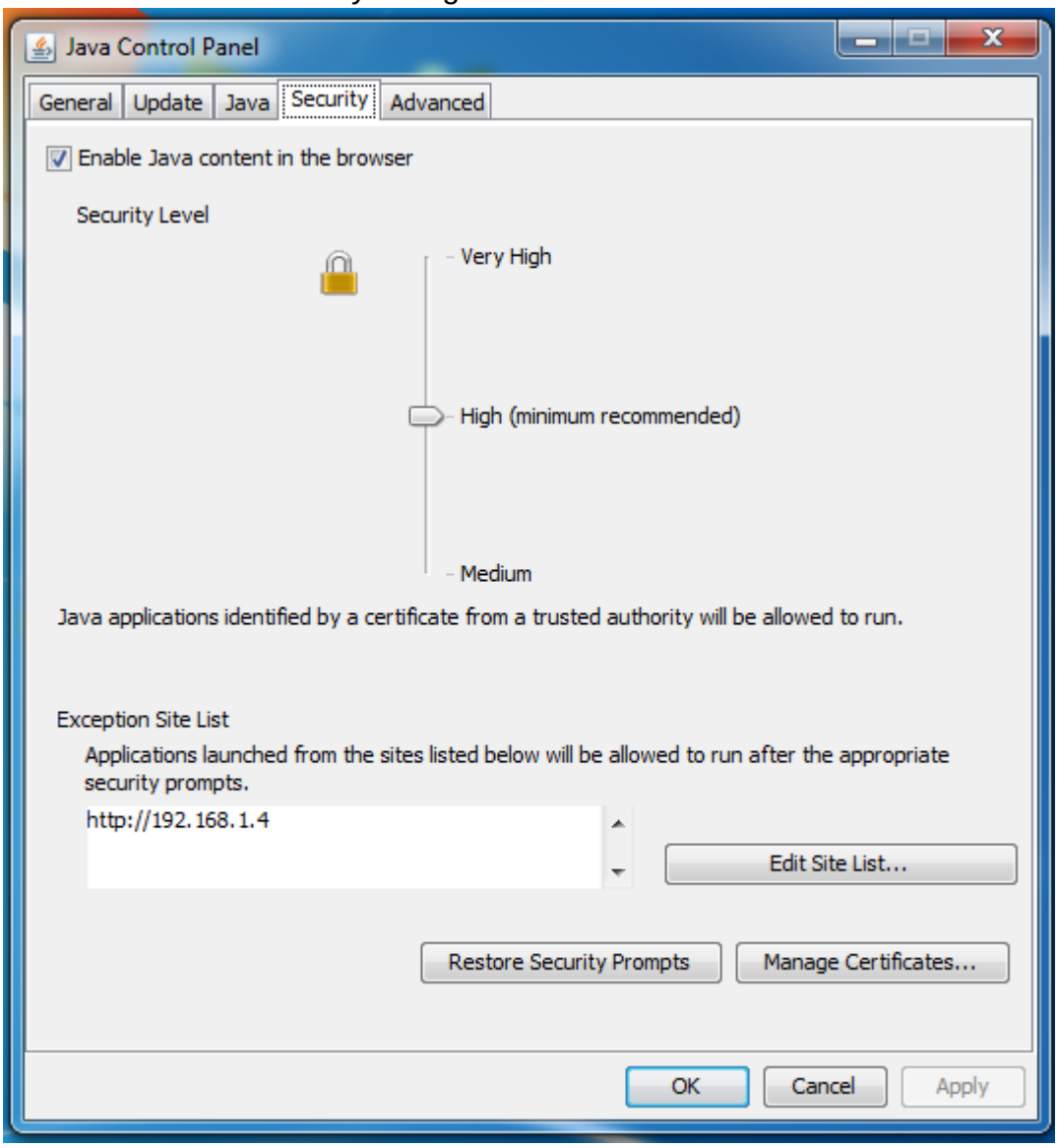

4. You have finished entering your device address on Java's exception list. Next, you will open your browser and try to talk to the Applet the way you normally do. If you are using Internet Explorer and get the following window, select the Run this time button.

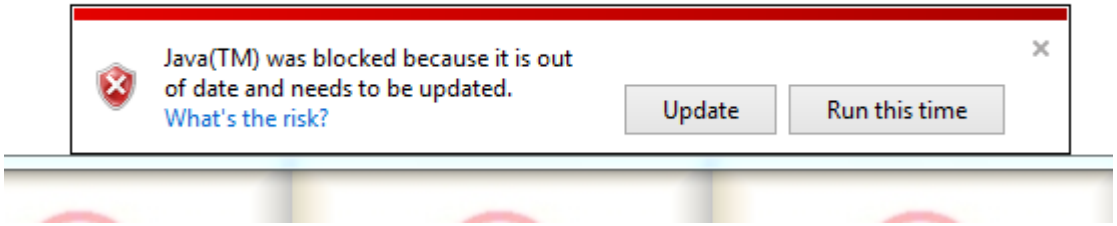

5. If you are using Internet Explorer and get the following window, select the RUN option.

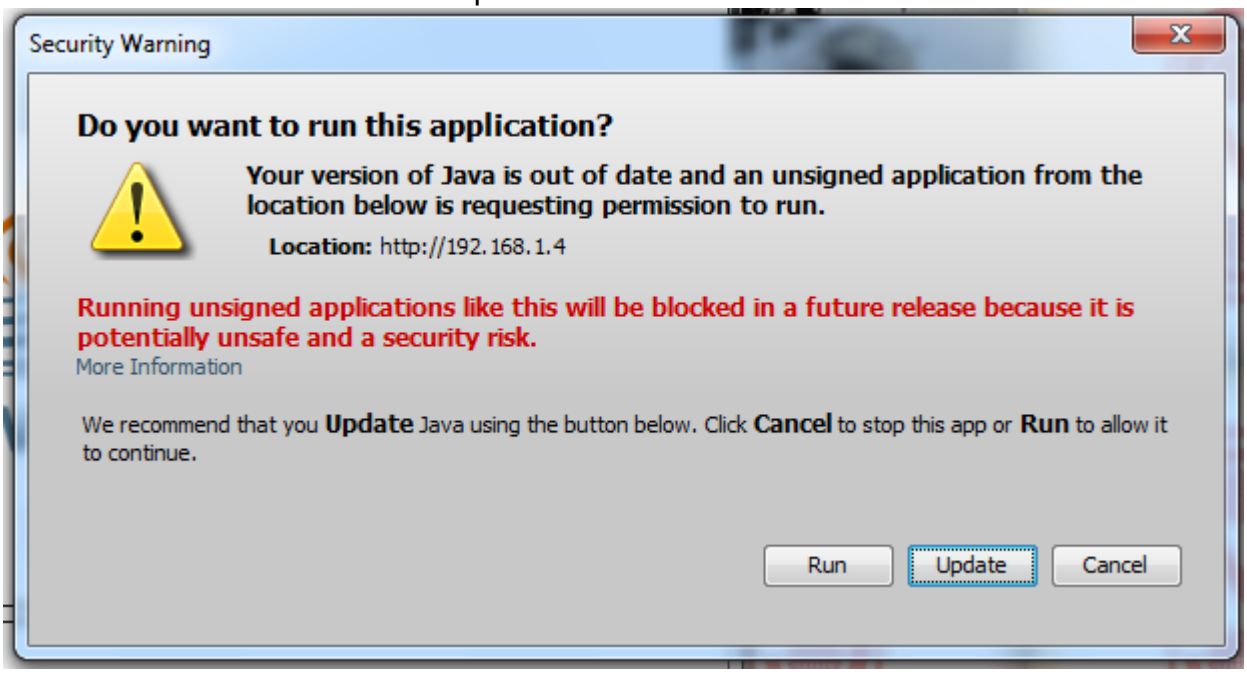

6. After entering Username and Password, the applet should connect with your unit.

4.2.2 Web Pages

4.2.2.1 Web Page 1: Contact Information Page

Figure 9 displays a picture of the SLM and information on how to contact Spellman High Voltage Electronics Corporation. By clicking on the picture of the SLM or on the button labeled “Click Here to Monitor and Control” one can move on to the next screen, the license agreement.

Figure 9 - Web Page 1- Contact Information

4.2.2.2 Web Page 2: License Agreement Page

Figure 10 displays the license agreement. Here the user can either agree or disagree with the Spellman license agreement. Click on “I Accept” to continue on to the applet.

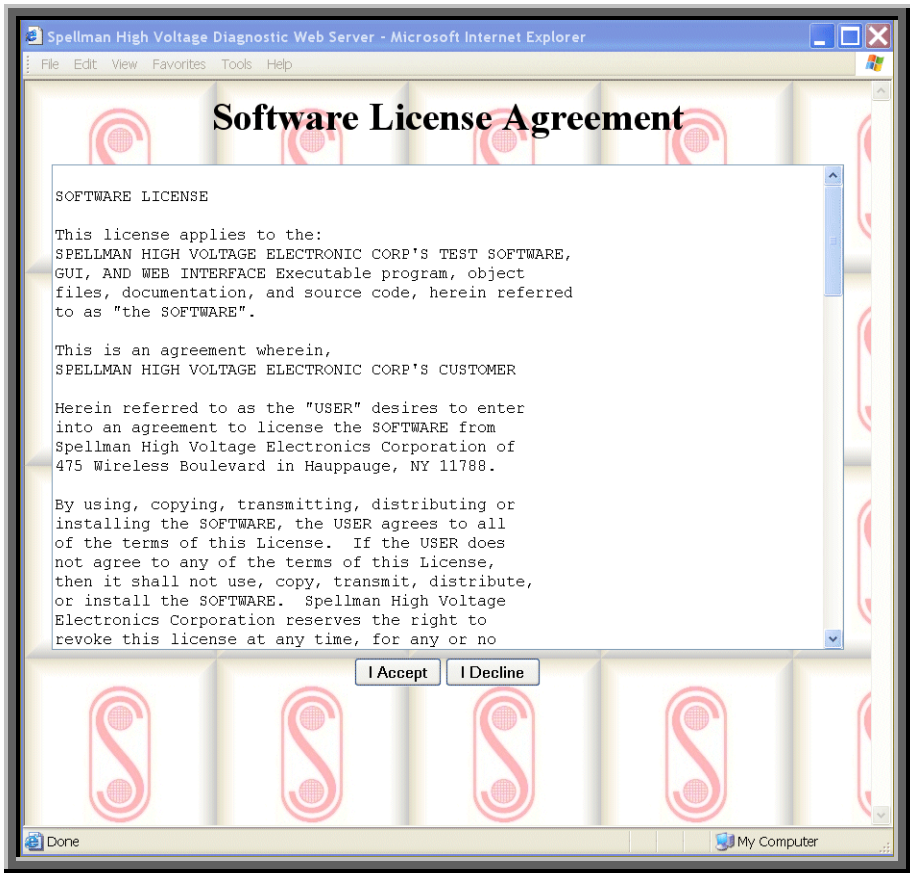

Figure 10 - Web Page 2 – License Agreement

4.2.2.3 Web Page 3 - Monitor and Control Applet

4.2.2.3.1 Requirements

The Monitor and Control Applet is a java “applet” (“small java application” specifically written to be embedded in a web page and invoked from a browser) that requires an Internet browser with an installed JVM (Java Virtual Machine). The password for the applet is: **shvapplet**. We have tested under Internet Explorer 5 and 6, Microsoft JVM 5 and Sun JVM versions 1.6 and higher.

4.2.2.3.2 Description of Monitor and Control Applet

Figure 11 displays an example of an embedded monitor and control application.

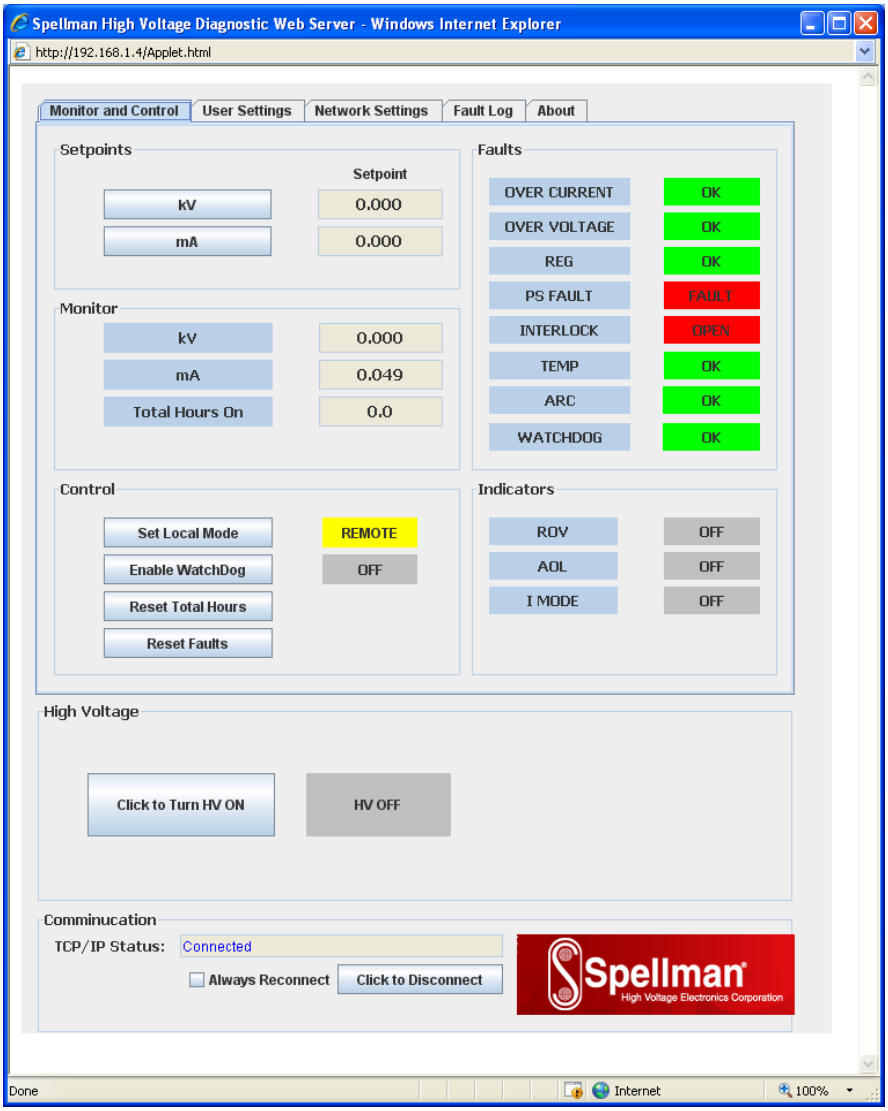

Figure 11 - Control and Monitor Applet

View the screen as a “left” and a “right” with the right half containing status read from the SLM and the left half containing the values that are programmable by the user. For any programmable setting you click on the button to the left of the setting, which brings up the program set point screen. For example, click on the button labeled, ‘V’ to set the output voltage set point. Refer to figure 12.

4.2.2.4 Program Set Point Screen

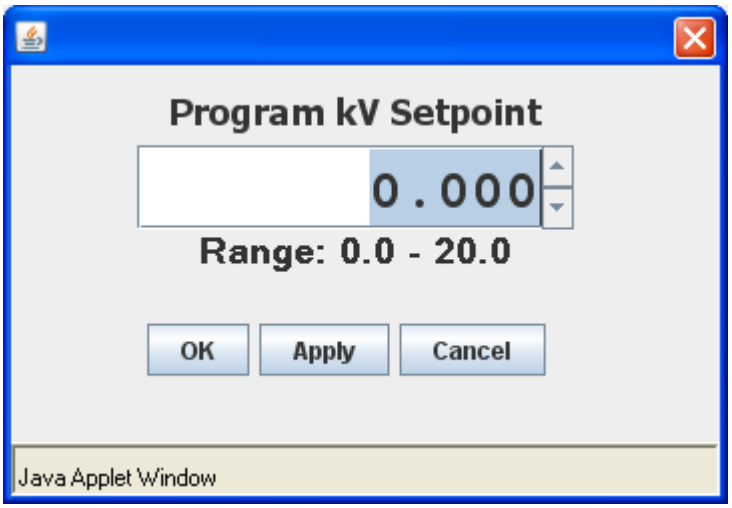

Figure 12 - Program Configurable Values Screen

The field is the scaled value or real world value. Enter the desired set point level within the shown range.

The user can then click Apply to send the set point to the SLM and remain in the set point screen, or click OK to send the set point and close the set point entry window. The user may also click on Cancel to close the window without sending any changes.

To reset the Total hour On meter to zero via the Applet a password is required.The password is **“SHV_Reset”**

4.2.2.5 Java Warning Messages

You may notice a message at the bottom of all dialog windows that are displayed from the SLM Control and Monitor Applet. The wording may vary slightly depending on the JVM version but on some the message is “Java Applet Window”. This message informs the user that the dialog window was generated by an applet. The design philosophy for the JVM was for secure computing, so the origins of new windows are supposed to be as obvious as possible.

4.2.2.6 “Tabs” on Applet

The user can view and set operating parameters of the applet or network configurations of the SLM or view firmware version information by changing tabs.

4.2.2.7 User Settings

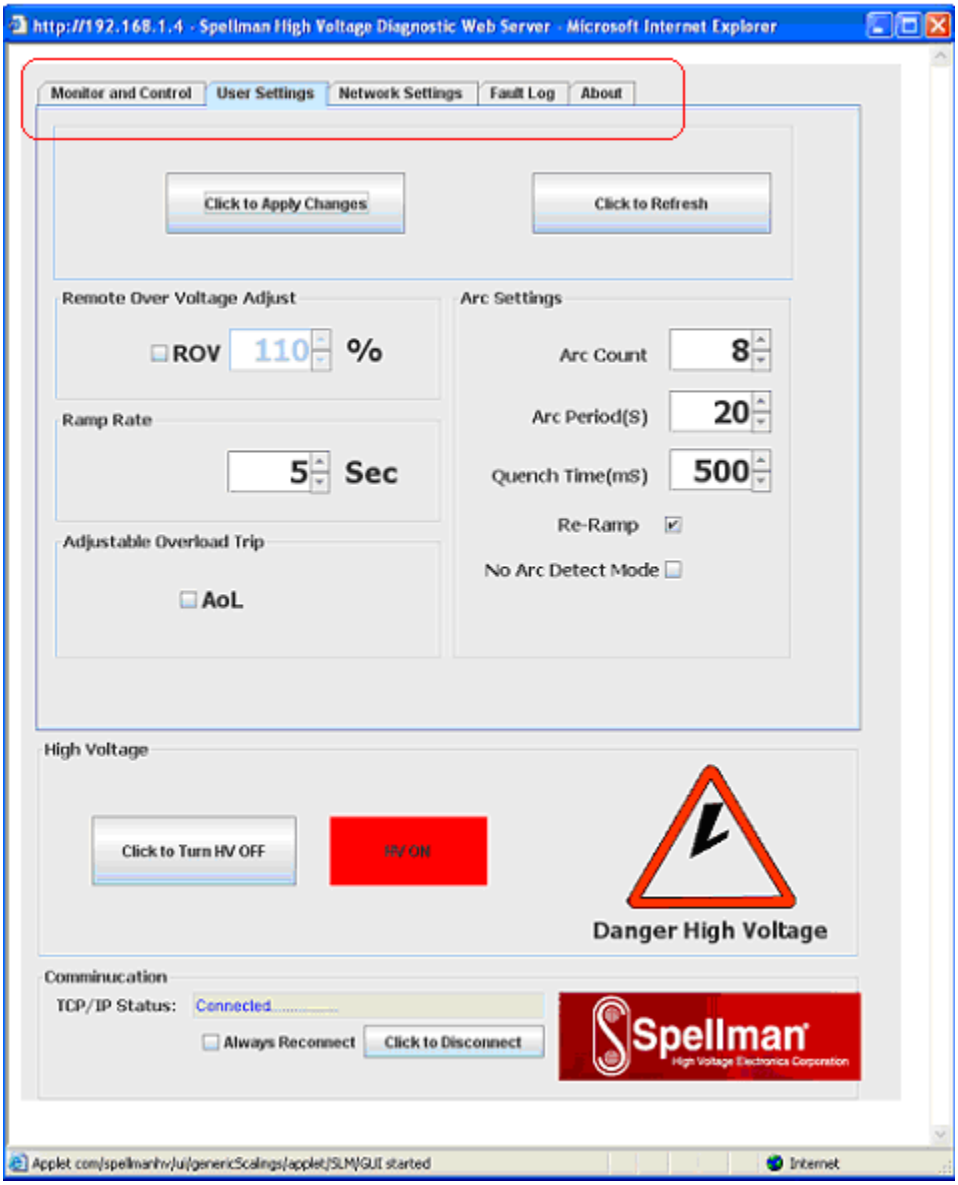

Figure 13 – User Setting

The User Settings tab allows the user to set firmware configurable options, as shown above. After making changes to the options, click on the “Click to Apply Changes” button.

4.2.2.8 Fault log

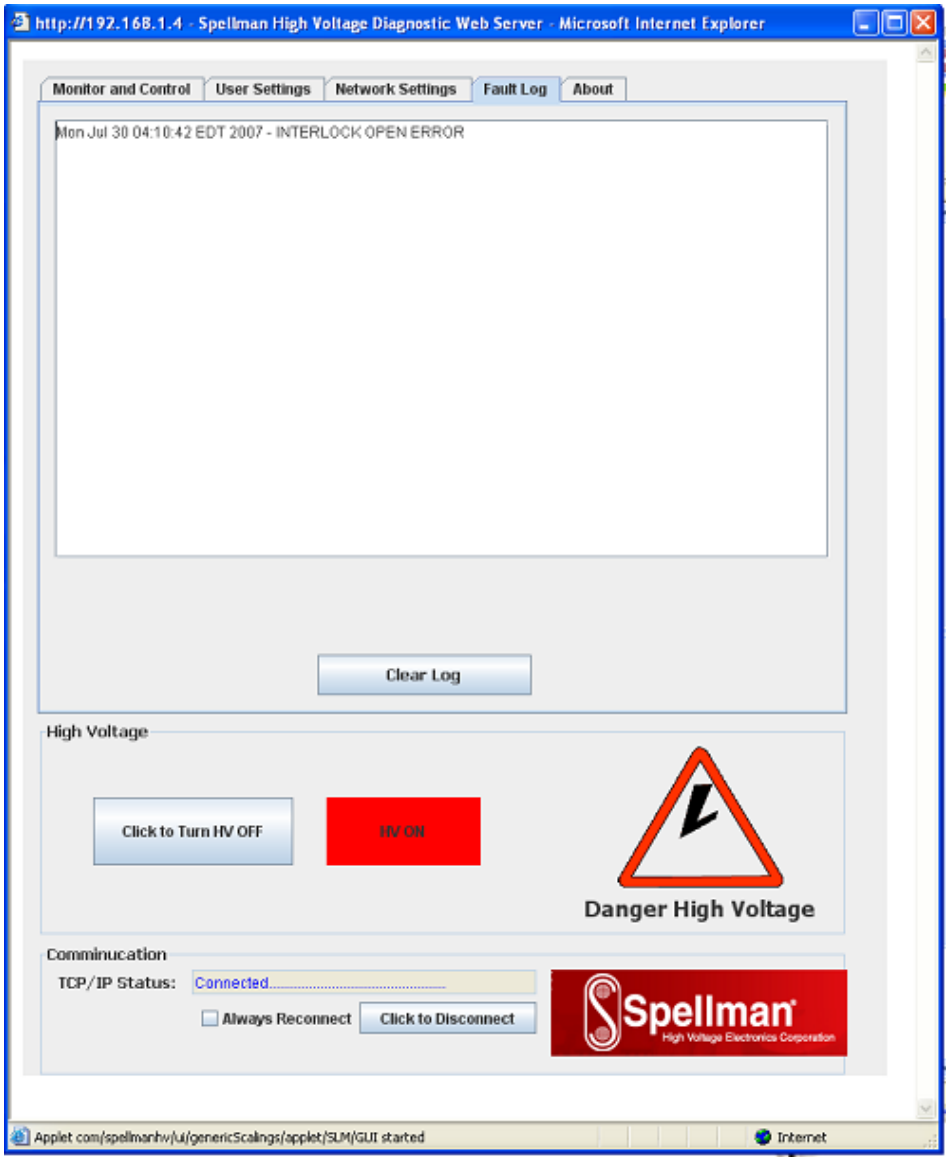

Figure 14 – Fault log

Fault log displays faults with their date and time.

4.2.2.9 About

Displays version information and model number.

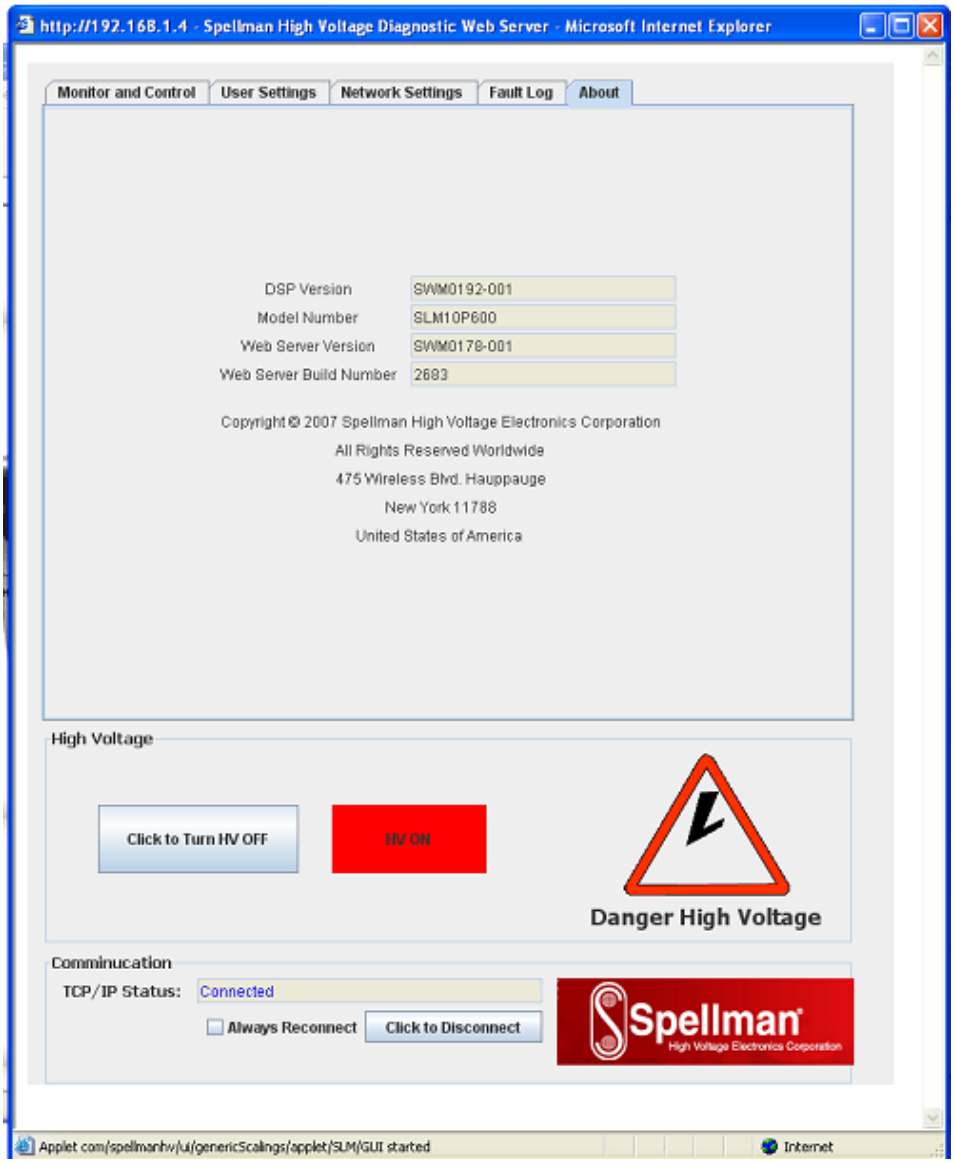

Figure 15 – About

4.2.2.10 Turning the SLM HVOn/Off and Connection Status

Please refer to Figure 11, the Monitor and Control Applet.

Setting Name	Range Values
Local/Remote	Local mode/Remote mode
HV	On/Off
Interlock	Open/Closed
Fault Status	OK/Fault
Connection Status	Connected/No Data Received/Disconnected

Unlike the controls we previously discussed at the top of the screen which required a separate dialog screen to enter values, these are controlled by a button. For example, an On/Off button controls the HV. When HV is on, the Control is labeled “Click to Turn HV Off”. When HV is off, the control is labeled “Click to Turn HV On”. Thereby handling the two distinct states.

Notice that at the very bottom of the screen is a text field that displays the current connection status, which as mentioned above is one of three values. “Connected” is displayed when there exists a valid TCP/IP session connecting the SLM and the Applet and data is being received by the applet from the SLM. The next state is “No Data Received” which is when there is still a valid connection but no responses have been received from the SLM for 2 seconds. Lastly, the text field displays “Disconnected” when the TCP/IP session has been disconnected. To operate the UUT using the Computer interface the UUT must be set to Remote Mode by Clicking “Click to Set Remote, the SLM Applet automatically sets the unit to Remote mode upon connecting.

When the Applet is first started and anytime the “Click To Connect” button is clicked there is a 5 second delay as the Applet starts up the threads necessary for communication between it and the SLM.

4.2.3 Direct Connection between the SLM and a Computer

A direct Ethernet connection between the SLM and the computer requires an RJ45 crossover cable. The end connectors will look identical to a “normal” RJ45 connector but the colors of some of the wires in the connectors will be “reversed”. Hold up the two ends of the RJ45 cable and look at the color of the wires from left to right. They should differ on the two connectors.

When direct connecting the SLM to a computer using a crossover cable over Ethernet they are essentially participating in a private network. As such you need to pick two valid IP addresses, one for each device.

The table below illustrates that not all IP addresses are actually valid IP addresses. For example, IP addresses beginning with 127 are not valid.

Class	Address Range
A	1.0.0.0-126.255.255.255
B	128.0.0.0-191.255.255.255
C	192.0.0.0-223.255.255.255

4.2.3.1 Configuring the Computer for Direct Ethernet Connection

As mentioned above both the IP Address and Subnet Mask need to be configured. In our environment computers normally are assigned IP addresses dynamically, using DHCP. We need to change this and assign the IP Address statically to the one we have selected.

Here are the steps on Windows XP. On the desktop right click on “My Network Places” and select properties at the bottom of the menu.

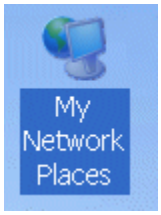

Figure 16 – Right Click on Desktop

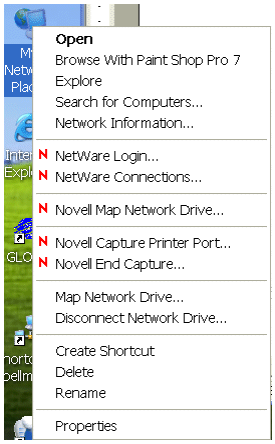

Figure 17 – Select Properties

After selecting properties you are brought up to the screen below (Figure 18). You must RIGHT CLICK and select Properties on Local Area Connection, and not double click which will display a window similar to figure 19.

Figure 18 – Here you must Right Click and Select Properties

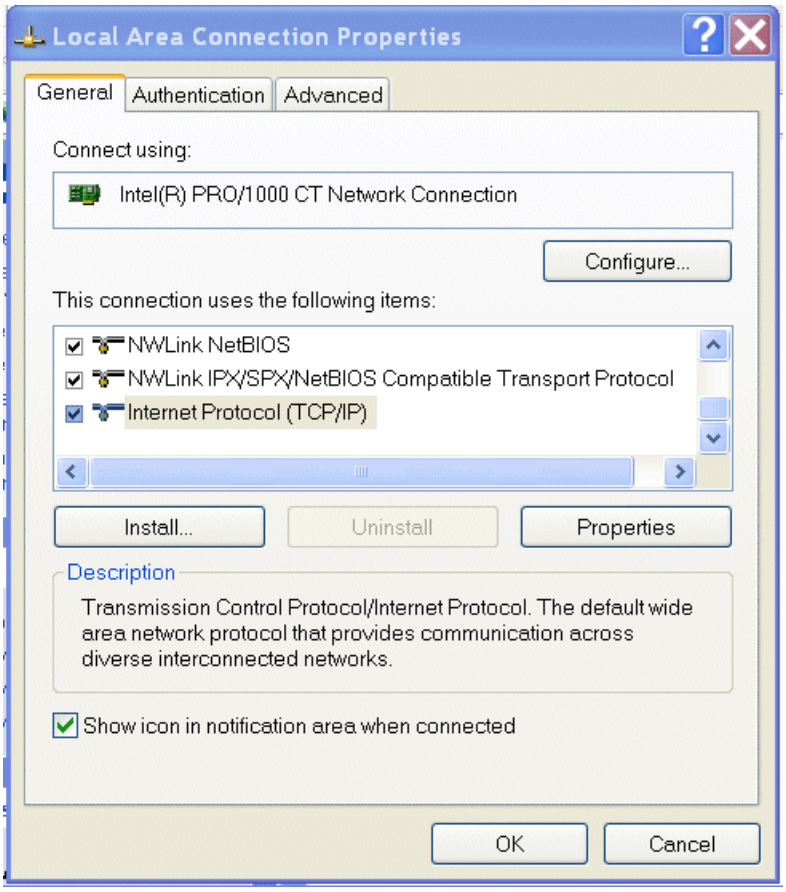

Figure 19 – Local Area Connection Properties

Now you must select “Internet Protocol (TCP/IP)” and click on the Properties button to be brought to figure 20. Lastly you must disable any firewall software you have running. If you are running a proxy server for Internet access, you must also disable the proxy client. Disabling this also requires a reboot.

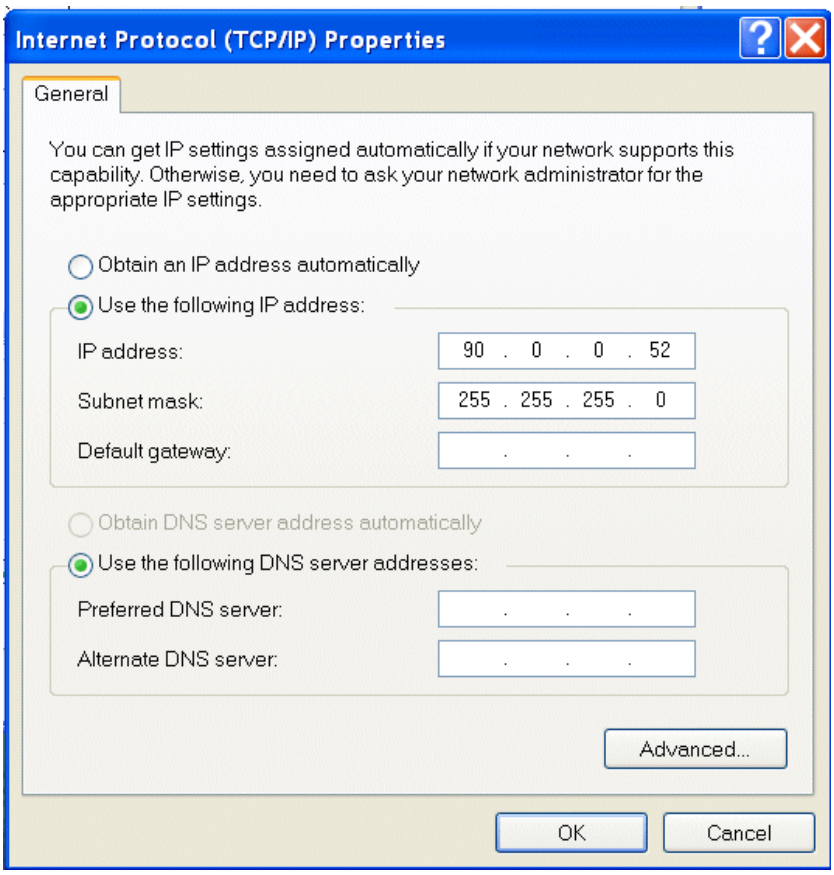

Figure 20 – TCP/IP Properties

4.2.3.2 Testing a Direct Connection

You can use the program "Ping" to test a network connection between the computer and the SLM. "Ping" is a command line tool so we will need to bring up a command prompt. Under Windows NT, 2000 and XP the name of this command is "CMD". Under Windows 98 the name of this command is "Command".

To do this, click on Start->Run->Cmd

Then on the command line type

Ping <IP Address>

For example

Ping 192.168.1.4

If the SLM is found at the specified IP address, the Ping command will respond with a report that is similar to:

Pinging 192.168.1.4 with 32 bytes of data:

Reply from 192.168.1.4: bytes=32 time<1ms TTL=64

Reply from 192.168.1.4: bytes=32 time<1ms TTL=64

Reply from 192.168.1.4: bytes=32 time<1ms TTL=64

Reply from 192.168.1.4: bytes=32 time<1ms TTL=64

Ping statistics for 192.168.1.4:

Packets: Sent = 4, Received = 4, Lost = 0 (0% loss),

Approximate round trip times in milli-seconds:

Minimum = 0ms, Maximum = 0ms, Average = 0ms

4.2.4 Configuring the SLM For a Local Area Network (LAN)

If you have chosen to place the SLM onto your local area network you will need:

- A CAT5 network patch cable to physically connect the SLM to the LAN
- A static IP address to assign to the SLM.

Remember that even if the IP address you have selected is in general a valid IP address it needs to be valid for your LAN (local area network). Otherwise the device will not be accessible from an Internet browser or Ping.

4.2.4.1 Configuring the Network Settings from the Monitor and Configure Applet

The network settings are configurable from the Network Settings tab, refer to figure 21.

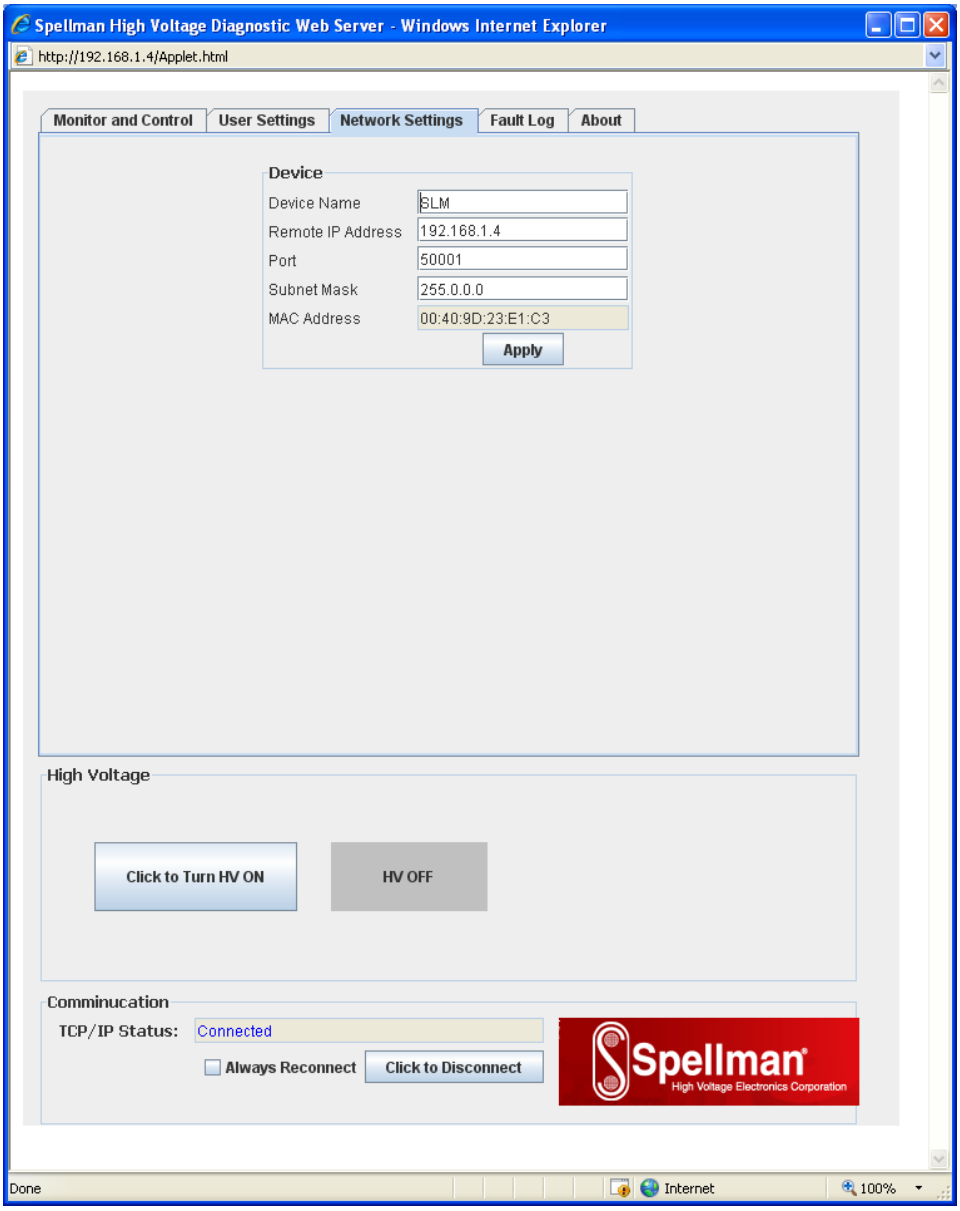

Figure 21 - Configure Network Settings

The settings that can be changed are the:

- Device Name
- IP Address
- TCP Port
- Subnet Mask

Once the Apply button is clicked on the network settings screen, the network component of the SLM is configured, rebooted and the applet is disconnected from the SLM. You must type the NEW IP address into a web browser to bring up a new instance of the applet to monitor and control the SLM after reconfiguring it. This may also

require reconfiguring the host computer with the correct host IP address, subnet mask, and TCP port.

The device name does not affect the operation of the SLM; it is simply a way for the user to differentiate multiple units on the same network.

Depending on the type of network you are attaching the SLM to, you may need to configure the host PC's IP address and subnet mask as shown in section 4.2.3.1. You can also test a network connection to the SLM by following the instructions listed in section 4.2.3.2 .

4.2.5 Enabling Communications Objects in Visual Basic for Ethernet Communications

For Ethernet communications, we need Microsoft Winsock Control 6.0 and SP5. To enable this in your VB 6 project, go to:

Project -> Components

Once selected in your toolbox, you will have an icon of two computers linked together and will be named: Winsock. This can be dragged and dropped into your application. Then set the object's properties.

4.2.6 Configuring Communications in Visual Basic for Ethernet

In order to configure the Winsock Object, you must make the following initialization in the object's properties:

Protocol	0 – sckTCPProtocol

Then, in the application code, include the following commands:

```
tcpClient.RemoteHost = host
tcpClient.RemotePort = portNumber
tcpClient.Connect
```

For further information regarding the use of the above commands, please refer to your Visual Studio Help File.

4.2.6.1 Data Output Example

MSComm1 is both the serial and USB port. TcpClient is the Ethernet port.

```
If (portType = "ethernet") Then
        tcpClient.SendData (str)
Else
        MSComm1.InBufferCount = 0
         On Error GoTo done
        MSComm1.Output = str
        done:
        tmrOpenClose.Enabled = True
End If
```

4.2.6.2 Data Input Example

```
If (portType = "ethernet") Then
        Do
                DoEvents
.....................................................................................................
.....................................................................ttcpClient.GetData temp$
                str = str + temp$
                Loop Until InStr(str, Chr(3)) Or Timer - t1 > 1
                On Error Resume Next
Else
        Do
                DoEvents
                If MSComm1.InBufferCount > 0 Then
                        str = str & MSComm1.Input
                End If
                Loop Until InStr(str, Chr(3)) Or Timer - t1 > 1
                If InStr(str, Chr(3)) > 0 Then
                        tmrOpenClose.Enabled = False
                End If
End If
```

4.3 USB

The USB interface makes use of a standard ‘command/response’ communications protocol. See section 6.0 for the syntax of the serial interface protocol.

The USB interface is accessed through a Windows USB Human Interface driver (HID).

4.3.1 USB Driver Installation

The HID driver is a Windows driver installed with the operating system. To determine if the driver had been acquired open the System properties window selecting the Control Panel System Properties.

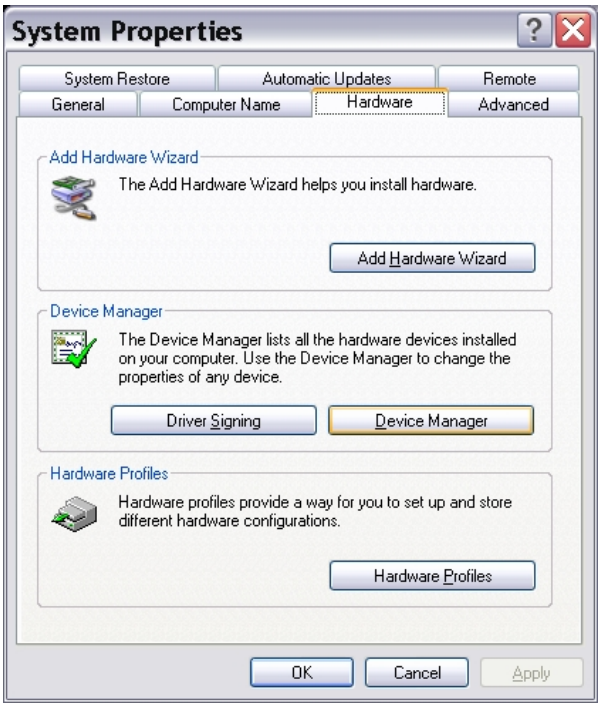

Figure 22 – System Properties

Then select Device Manager and expand the Human Interface Devices. View the properties of the USB Human Interface Device icon and verify that Spellman USB HID appears in the Location section.

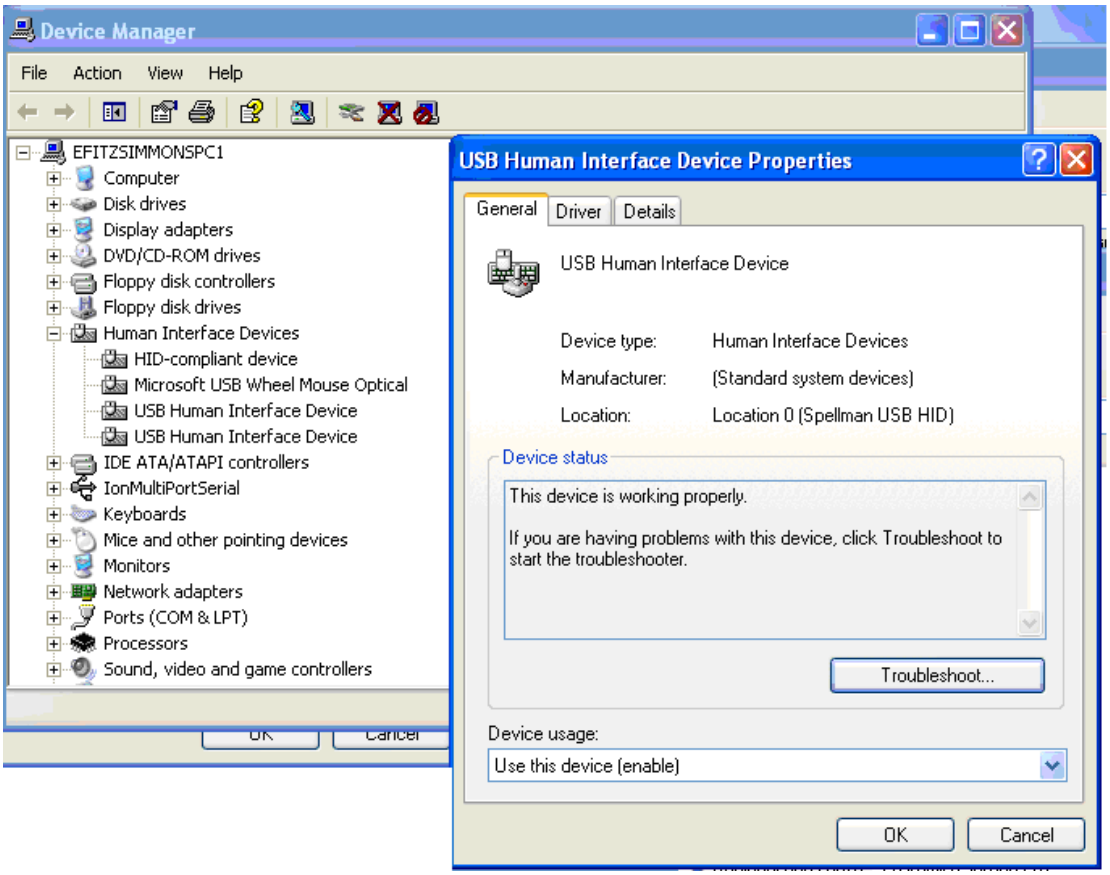

Figure 23 – Device Manager showing USB HID

4.3.2 USB and EMI

The USB protocol utilizes a heartbeat signal from each client device back to the host (PC). If the heartbeat is interrupted due to radiated or conducted transient noise, it is possible that the host may lose connection with the client. This can cause problems with data transfers over the USB cable.

The DXM when used in combination with the HID Windows driver makes it possible for the host to renumerate the client connection and reestablish communications. This is providing the control application implements a method of timeout and retry.

NOTE: If an EMI disruption occurrs the DXM will continue to renumerate until a connection with the GUI is re-established.

4.3.3 Enabling Communications Objects in Visual Basic for USB

The dynamic link library USB_dll.dll will be provided which needs to be added to the project. The library has three functions that can be called from the VB code.

The three functions are:

- FindTheHid – finds the connection with the correct VID, PID and Serial Number
- WriteReport(str) – Writes a string to the connected HID interface
- ReadReport() – Returns a string from the connected HID interface

4.3.4 Configuring Communications in Visual Basic for USB

To use the USB_dll.dll in VB the following statements are needed.

```
Dim usb As usbDll
Dim MyDeviceDetected As Boolean

Set usb = New usbDll
```

Using this statement determines whether a connection is present.

```
MyDeviceDetected = usb.FindTheHid
```

If MyDeviceDetected is true then the connection is present.

4.3.5 Software Considerations for USB Reconnection

The following Visual Basic code snippets are presented as a guideline for implementation with revision C and higher assemblies.

4.3.5.1 Recognize partial, corrupt, or absent data

```
1:  temp2$ = inputInputString
2:  If temp2$ <> "" Then
3:      btn_UPDATEDATA.Value = False
4:      CommStatusFlag = True
5:      CommaPos = InStr(Start, temp2$, Comma, vbTextCompare)
6:      ' Channel 0
7:      On Error GoTo endhere
8:      AmbTemp = Mid(temp2$, Start, (CommaPos - Start))
```

Please note that even though we have guarded against no data, in line 2, we still need to guard against bad data, in this case no comma, on line 8. If there is no comma, we wind up passing a negative value to Mid, which is an error, that we should trap for.

4.3.5.2 Retrieve data only if it exists

```
1:  Do
2:      DoEvents
3:      If MSComm1.InBufferCount > 0 Then
4:              str = str & MSComm1.Input
5:      End If
6:      Loop Until InStr(str, Chr(3)) Or Timer - t1 > 1
7:      'str = str & MSComm1.Input
8:      If InStr(str, Chr(3)) > 0 Then
9:              tmrOpenClose.Enabled = False
10:     End If
```

Notice that in line 3 we check for the existence of data before we extract data from the USB port. Normally, if there is no data, line 4 would append an empty string. However, during a noise event, retrieving data without first checking the existence of data could hang.

4.3.5.3 Example Output Routine

Notice that on line 13 we register an error handler in case the port is invalid because we have closed it in another routine. Notice that on line 16 we start a timer. When we output data on the port we start a timer to keep track of incoming data. If we get no incoming data it means that communications have been interrupted.

```
1: Private Sub outputOutputString(outputString As String)
2:   Dim str As String
3:   str = ProcessOutputString(outputString)
4:    StatusBar1.Panels(4).Text = "TX: " & str
5:    'StatusBar1.Panels(3).Text = "RX: Waiting"
6:    If (portType = "ethernet") Then
7:     tcpClient.SendData (str)
8:    ElseIf (portType = "USB") Then
9:       usb.WriteReport (str)
10:    Else
11:        MSComm1.InBufferCount = 0
12:
13:   On Error GoTo done
14:        MSComm1.Output = str
15: done:
16:       tmrOpenClose.Enabled = True
17:    End If
18: End Sub
```

4.3.5.4 Example Input Routine

Notice on line 26 we check for data first before extracting data from the input. Then if we have actual data we turn off the timer. Otherwise the timer routine toggles the port open/close.

```
1: Private Function inputInputString() As String
2:    Dim str As String
3:    Dim t1 As Single
4:   Dim temp$

5:     Dim stra As String
6:     Dim stri(300) As String

7:    t1 = Timer
8:
9:   If (portType = "ethernet") Then
10:        Do
11:            DoEvents
12:            tcpClient.GetData temp$
13:            str = str + temp$
14:       Loop Until InStr(str, Chr(3)) Or Timer - t1 > 1
15:       On Error Resume Next

16:    ElseIf (portType = "USB") Then
17:       Do
18:            DoEvents
19:          stra = usb.ReadReport
20:          str = str & stra
21:           'str = str & ReadReport
22:       Loop Until InStr(str, Asc(3)) Or Timer - t1 > 0.09

23:    Else
24:       Do
25:            DoEvents
26:           If MSComm1.InBufferCount > 0 Then
27:                str = str & MSComm1.Input
28:           End If
29:        Loop Until InStr(str, Chr(3)) Or Timer - t1 > 1
30:
31:        If InStr(str, Chr(3)) > 0 Then
32:            tmrOpenClose.Enabled = False
33:       End If
34:
35:        frm_EXTRAS.txt_MSCOMMBUFF.Text = str
36:        tmr_COMMWDT.Enabled = True
37:        On Error Resume Next
```

```
38:    End If
39:    StatusBar1.Panels(3).Text = "RX: " & str
40:   inputInputString = str
41:    tmr_RCVTIMER.Enabled = True
42: End Function
```

4.3.5.5 Example Timer Routine: Toggle Port State

This is the timer routine in which the open/closed state of the port is toggled. If communications are interrupted, the USB device will re-register itself with the OS (vendor term: renumeration). Once this happens, re-opening the port will enable communications. Until the re-registration happens, open operations will fail. Notice line 5 where we register an error handler.

```
1:Private Sub tmrOpenClose_Timer()
2:   If MSComm1.PortOpen = True Then
3:
4:        MSComm1.PortOpen = False
5:        On Error GoTo done
6:       MSComm1.PortOpen = True
7: done:
8:       tmrOpenClose.Enabled = False
9:    End If
10:
11: End Sub
```

4.3.5.6 Example Timer Routine: Port Reconnection

This is another timer routine whose purpose is to turn the port on if it is off. Notice that in line 8 an error handler is called because if the device has not re-registered itself with the OS, an error will be raised.

```
1: Private Sub tmr_COMMWDT_Timer()
2:
3: tmr_COMMWDT.Enabled = False
4:
5: If CommStatusFlag = True Then
6:
7:    If MSComm1.PortOpen = False Then
8:        On Error GoTo done
9:        MSComm1.PortOpen = True
10: done:
11:   End If
12:
13: ElseIf CommStatusFlag = False Then
14:
```

```
15:    If MSComm1.PortOpen = False Then
16:
17:        MSComm1.PortOpen = True
18:    Else
19:        MSComm1.PortOpen = False
20:    End If
21:
22: End If
```

4.3.5.7 Data Parsing Example

Here we have an example of a code that parses incoming data. Notice that it makes use of our generic input and output routines. The important consideration is to gracefully handle corrupted input data after a noise event. In this case we may get data, so a test against empty string returns false, but we may not get commas in the correct place. Notice that we register an error handler on line 26 so that the mid function, which would raise an error when given a negative number, is handled.

```
1: Private Sub btn_EMI_Click()
2:   Dim temp2$
3:    Dim Response1$
4:    Dim Response2$
5:    Dim number$
6:    Dim Comma
7:    Dim CommaPos
8:    Dim Start
9:    Dim ODATA$
10:
11: Comma = ","
12: Start = 5
13:
14: If tmr_RCVTIMER.Enabled = True Then
tmr_RCVTIMER.Enabled = False
15: If tmr_NETRCVTMR.Enabled = True Then
tmr_NETRCVTMR.Enabled = False
16:
17: If AutoUpdate = True Then
18:    tmr_UPDATE.Enabled = False
19: End If
20:
21:    number$ = "15,"
22:    outputOutputString (number$)
23:
24:    temp2$ = inputInputString
25:    CommaPos = InStr(Start, temp2$, Comma, vbTextCompare)
```

```
26:     On Error GoTo endhere
27:    Response1$ = Mid(temp2$, Start, (CommaPos - Start))
28:
29:    'With a 5v reference:
30:    ODATA$ = Format(str(Response1$ * 0.0004884), "0.##0")
31:
32:   txt_DACB.Text = ODATA$ + " mA"
33:    frm_RAWDATA.txt_RAWDACB.Text = str(Response1$)
34:    txt_DACB.BackColor = vbWhite
35:    CommStatusFlag = True
36: endhere:
37:
38: If portType = "ethernet" Then
39:   tmr_NETRCVTMR.Enabled = True
40: Else
41:    tmr_RCVTIMER.Enabled = True
42: End If
43:
44: If AutoUpdate = True Then tmr_UPDATE.Enabled = True
46: End Sub
```

5.0 ETHERNET COMMANDS

5.1 TCP/IP FORMAT

Each Ethernet command will consist of a TCP/IP header followed by the required data bytes. Figure 27 summarizes the TCP/IP header configuration. Please note that this functionality is provided by the software implementation of the Open Systems Interconnection (OSI) TCP/IP protocol stack, specifically the upper 4 layers.

Byte				
0	Protocol Version	Header Length	Type Of Service	Total Length
4	Packet ID		Flags	Fragmentation Offset
8	Time To Live	Protocol	Header checksum	
12	Source Address			
16	Destination Address			
20	Source Port		Destination Port	
24	Sequence Number			
28	Acknowledgement Number			
32	Data Offset	Reserved	Code Bits	Window
36	Checksum		Urgent Pointer	
40	Data Byte 1	Data Byte 2	Data Byte 3	Data Byte N

Figure 24: Network TCP/IP datagram header

The format of Data Bytes 1 through N are as follows:

<STX><CMD><,>ARG><,><ETX>

Where:
<STX> = 1 ASCII 0x02 Start of Text character
<CMD> = 2 ASCII characters representing the command ID
<,> = 1 ASCII 0x2C character
<ARG> = Command Argument
<,> = 1 ASCII 0x2C character
<ETX> = 1 ASCII 0x03 End of Text character

5.2 COMMAND ARGUMENTS

The format of the numbers is a variable length string. To represent the number 42, the string ‘42’, ‘042’, or ‘0042’ can be used. This being the case, commands and responses that carry data are variable in length.

5.3 COMMAND OVERVIEW

Data Byte section of the TCP/IP Datagram			
Command Name	<CMD>	<ARG>	RANGE
Program RS-232 unit baud rate	07	1 ASCII	1 - 5
Program User Configs	09	9 ASCII	See Description
Program kV	10	1-4 ASCII	0-4095
Program mA	11	1-4 ASCII	0-4095
Request kV Setpoint	14	None	-
Request mA Setpoint	15	None	-
Request Analog Monitor Readbacks	19	None	-
Request HV On Hours Counter	21	None	-
Request Status	22	None	-
Request Software Version	23	None	-
Request Hardware Version	24	None	-
Request Web Server Version	25	None	-
Request Model Number	26	None	-

Request User Configs	27	None	
Request unit Scaling	28	None	
Reset HV On Hours Counter	30	None	-
Reset Faults	31	None	-
Request Network Settings	50	None	-
Program Network Settings	51	6 ASCII	See Description
Read Interlock Status	55	1 ASCII	0 or 1
Request kV monitor	60	None	-
Request mA monitor	61	None	-
Request –15V LVPS	65	None	-
Watchdog Tickle	88	None	-
Watchdog enable	89	1 ASCII	0 or 1
Turn HV on/off	98	1 ASCII	0 or 1
Program Local/Remote Mode	99	1 ASCII	0 or 1

5.4 RESPONSE OVERVIEW

The command responses will follow the same network TCP/IP header format as outlined above in section 5.1. This list is comprised of Commands with complex responses only. Commands using a simple response will use the <$> character (ASCII 0x24) as a “Success” response or a single character error code. These will be seven ASCII characters in length.

Response Name	<CMD>	Response
Request kV Setpoint	14	7-10 ASCII
Request mA Setpoint	15	7-10 ASCII
Request Analog Monitor Readbacks	19	11-22 ASCII
Request Total Hours High Voltage On	21	13 ASCII
Request Status	22	12 ASCII
Request DSP Software Version	23	17 ASCII
Request Hardware Version	24	9 ASCII
Request Web Server Version	25	17 ASCII
Request Model number	26	11 ASCII
Request User Configs	27	8-16 ASCII
Request unit Scaling	28	23-31 ASCII
Request Network Settings	50	48-104 ASCII
Read Interlock Status	55	7 ASCII
Request kV monitor	60	7-10 ASCII
Request mA monitor	61	7-10 ASCII
Request –15V LVPS	65	7-10 ASCII
Request Faults	68	19 ASCII

5.5 COMMAND STRUCTURE

5.5.1 Program kV

Description:
The host requests that the firmware change the setpoint of kV.

Direction:
Host to supply

Syntax:
<STX><10><,><ARG><,><ETX>

Where:
<ARG> = 0 - 4095 in ASCII format

Example:
<STX>10,4095,<ETX>

Response:
<STX><10><,><$><,><ETX>
<STX><10><,><ARG><,><ETX>

where <ARG> = error code

Error Codes TBD, 1 = out of range

5.5.2 Program mA

Description:
The host requests that the firmware change the setpoint of mA.

Direction:
Host to supply

Syntax:
<STX><11><,><ARG><,><ETX>

Where:
<ARG> = 0 - 4095 in ASCII format

Example:
<STX>11,4095,<ETX>

Response:
<STX><11><,><$><,><ETX>
<STX><11><,><ARG><,><ETX>

where <ARG> = error code

Error Codes TBD, 1 = out of range

5.5.3 Request Total Hours High Voltage On

Description:
The host requests that the firmware sends the present value of the Total Hours High Voltage On.

Direction:
Host to supply

Syntax:
<STX><21><,><ETX>

Example:
<STX>21,<ETX>

Response:
<STX><21><,><ARG1>< ARG2>< ARG3><ARG4><ARG5>
<.><ARG6>><,><ETX>

Where:
<.> = ASCII 0x2E
ARGx =0-9 in ASCII format

Example:
<STX>21,99999.9,<ETX>

5.5.4 Request Status

Description:
The host requests that the firmware sends the power supply status.

Direction:
Host to supply

Syntax:
<STX><22><,><ETX>

Example:
<STX>22,<ETX>

Response:
<STX><22><,><ARG1><,><ARG2><,><ARG3><,><ARG4><,><ARG5><,
><ARG6><,><ARG7><,><ARG8><,<ETX>

Where:
<ARG1> 1 = HvOn, 0 = HvOff
<ARG2> 1 = Interlock 1 Open, 0 = Interlock 1 Closed
<ARG3> 1 = Fault Condition, 0 = No Fault
<ARG4> 1 = Remote Mode, 0 = Local Mode
<ARG5> 1 = I Mode on, 0 = = I Mode off
<ARG6> 1 = ROV Enabled, 0 = ROV Disabled
<ARG7> 1 = AOL Enabled, 0 = AOL Disabled
<ARG8> 1 = Watchdog Enabled, 0 = Watchdog Disabled
Example:
<STX>22,1,1,0,0,0,0,0,0,<ETX>

5.5.5 Request DSP Software Part Number/Version

Description:
The host requests that the firmware sends the DSP firmware version.

Direction:
Host to supply

Syntax:
<STX><23><,><ETX>

Example:
<STX>23,<STX>

Response:
<STX><23><,>< ARG><,><ETX>

Where:
<ARG> consists of eleven ASCII characters representing the current firmware part number/version. The format is SWM9999-999

Example:
<STX>23,SWM9999-999,<ETX>

5.5.6 Request Hardware Version

Description:
The host requests that the firmware sends the hardware version.

Direction:
Host to supply

Syntax:
<STX><24><,><ETX>

Example:
<STX>24,<ETX>

Response:
<STX><24><,>< ARG><,><ETX>

Where:
<ARG> consists of 3 ASCII characters representing the hardware version. The format is ANN, where A is an alpha character and N is a numeric character

Example:
<STX>24,A01,<ETX>

5.5.7 Request Webserver Software Part Number/Version

Description:
The host requests that the firmware sends the Web Server firmware part number/version.

Direction:
Host to supply

Syntax:
<STX><25><,><ETX>

Example:
<STX>25,<ETX>

Response:
<STX><25><,><ARG><,><ETX>

Where:
<ARG> consists of eleven ASCII characters representing the current firmware part number/version. The format is SWM9999-999

Example:
<STX>25,SWM9999-999,<ETX>

5.5.8 Request Model Number

Description:
The host requests that the firmware sends the unit model number

Direction:
Host to supply

Syntax:
<STX><26><,><ETX>

Example:
<STX>26,<ETX>

Response:
<STX><26><,><ARG><,><ETX>

Where:
<ARG> consists of five ASCII characters representing the model number. The format is SLMNNANNN or XNNNN, where N is a numeric character and where A is a letter character.

Example:
<STX>25,SLM70P600,<ETX> or <STX>25,X9999,<ETX>

5.5.9 Reset Run Hours

Description:
The host requests that the firmware resets the run hour counter.

Direction:
Host to supply

Syntax:
<STX><30><,><ETX>

Example:
<STX>30,<ETX>

Response:
<STX><30><,><$><,><ETX>

5.5.10 Reset Faults

Description:
The host requests that the firmware resets all Fault messages and indicators.

Direction:
Host to supply

Syntax:
<STX><31><,><ETX>

Example:
<STX>31,<ETX>

Response:
<STX><31><,><$><,><ETX>

5.5.11 Request Network Settings

Description:
The host requests that the firmware transmits the network settings

Application:

	ARG 1	ARG2	ARG3	ARG4	ARG5
Function	Device Name	Remote Address	Remote Port	Subnet Mask	MAC Address

Direction:
Host to supply

Syntax:
<STX><50><,><ETX>

Example:
<STX>50,<ETX>

Response:
<STX><50><,><ARG1><,><ARG2><,><ARG3><,><ARG4><,>
<ARG5><,><,><ETX>

Arguments:
Device Name is limited to 20 characters or less. Remote address is a ip address in dotted notation. Remote port is a decimal number. Subnet Mask and Default Gateway are also dotted notation and MAC address is in MAC Address notation.

ARG1:	Device Name	1 character minimum, up to 20 maximum
ARG2:	IP Address	<nnn><.><nnn><.><nnn><.><nnn>, where <nnn> represents a number from 0 to 255.
ARG3:	Remote Port	5001 or from 49152 to 65535.
ARG4:	Subnet Mask	<xxx><.><xxx><.><xxx><.><xxx>, where <xxx> represents a number from 0 to 255.
ARG5:	MACAddress	<zzz><:><zzz><:><zzz><:><zzz><:><zzz><:><zzz> , where <zzz> represents a number from 0 to 255.

Example:
<STX>50,Spellman2.0,32.78.110.37,1026,255.0.0.0,0:100:33:1:32:84,<ETX>

5.5.12 Program Network Settings

Description:
The host requests that the firmware programs the network settings and then reboots.

Application:

	ARG 1	ARG2	ARG3	ARG4	ARG5
Function	Device Name	Remote Address	Remote Port	Subnet Mask	MAC Address

Direction:
Host to supply

Syntax:
<STX><51><,><ARG1><,><ARG2><,><ARG3><,><ARG4><,><ARG5><,><ARG6><,><ETX>

Arguments:
Device Name is limited to 20 characters or less. Remote address is a ip address in dotted notation. Remote port is a decimal number. Subnet Mask and Default Gateway are also dotted notation and MAC address is in MAC Address notation.

ARG1:	Device Name	1 character minimum, up to 20 maximum
ARG2:	IP Address	<nnn><.><nnn><.><nnn><.><nnn>, where <nnn> represents a number from 0 to 255.
ARG3:	Remote Port	5001 or from 49152 to 65535.
ARG4:	Subnet Mask	<xxx><.><xxx><.><xxx><.><xxx>, where <xxx> represents a number from 0 to 255.
ARG5:	MACAddress	<zzz><:><zzz><:><zzz><:><zzz><:><zzz><:><zzz> , where <zzz> represents a number from 0 to 255.

Example:
<STX>51,Spellman2.0,32.78.110.37,1026,255.0.0.0,0:100:33:1:32:84,<ETX>

Response:
None, as Embedded server reboots with new settings.

5.5.13 Read Interlock Status

Description:
The host requests that the firmware read the status of the interlock channel.

Direction:
Host to supply

Syntax:
<STX><55><,><ETX>

Response:
<STX><55><,><ARG1><,><ETX>
Where ARG1 is Interlocks 1. A 1 indicates that the Interlock is energized

Example:
<STX>55,1,<ETX>

5.5.14 Request kV Monitor

Description:
The host requests that the firmware report kV monitor.

Direction:
Host to supply

Syntax:
<STX><60><,><ETX>

Response:
<STX><60><,><ARG><,><ETX>

Where:
<ARG>=0-4095 in ASCII format representing unscaled value.

Example:
<STX>60,4095,<ETX>

5.5.15 Request mA Monitor

Description:
The host requests that the firmware report mA monitor.

Direction:
Host to supply

Syntax:
<STX><61><,><ETX>

Response:
<STX><61><,><ARG><,><ETX>

Where:
<ARG>=0-4095 in ASCII format representing unscaled value.

Example:
<STX>61,4095,<ETX>

5.5.16 Request –15V LVPS

Description:
The host requests that the firmware report –15V LVPS.

Direction:
Host to supply

Syntax:
<STX><65><,><ETX>

Response:
<STX><65><,><ARG><,><ETX>

Where:
<ARG>=0-4095 in ASCII format representing unscaled value.

Example:
<STX>65,4095,<ETX>

5.5.17 Request Faults

Description:
The host requests that the firmware report Faults.

Direction:
Host to supply

Syntax:
<STX><68><,><ETX>

Response:
<STX><68><,><ARG1><,><ARG2><,><ARG3><,><ARG4><,><ARG5><,><ARG6><,><ARG7><,><ETX>

Where:
<ARGx> 1 = Fault, 0 = No Fault in ASCII format

ARG1 = ARC
ARG2 = Over Temperature
ARG3 = Over Voltage
ARG4 = Under Voltage
ARG5 = Over Current
ARG6 = Under Current
ARG7 = Watchdog

Example:
<STX>68,0,0,0,0,1,0,0,<ETX>

5.5.18 Turn HV on/off

Description:
The host requests that the firmware turn high voltage on or high voltage off.

Direction:
Host to supply

Syntax:
<STX><98><,><ARG><,><ETX>

Where:
<ARG> 1 = HV on, 0 = HV off in ASCII format

Example:
<STX>98,1,<ETX>

Response:
<STX><98><,><$><,><ETX>
<STX><98><,><ARG><,><ETX>

where <ARG> = error code

Error Codes TBD,
1 = out of range

5.5.19 Program Local/Remote Mode

Description:
The host requests that the firmware to switch between Local and Remote Mode.

Direction:
Host to supply

Syntax:
<STX><99><,><ARG><,><ETX>

Where:
<ARG> 1 = Remote, 0 = Local in ASCII format

Example:
<STX>99,1,<ETX>

Response:
<STX><99><,><$><,><ETX>
<STX><99><,><ARG><,><ETX>

where <ARG> = error code

Error Codes TBD,
1 = out of range

5.5.20 Program RS-232 Baud rate

Description:
The host requests that the firmware change the Baud rate for RS-232.

Direction:
Host to supply

Syntax:
<STX><07><,><ARG><,><ETX>

Where:
<ARG> 1 = 9.6k in ASCII format
<ARG> 2 = 19.2k in ASCII format
<ARG> 3 = 38.4k in ASCII format
<ARG> 4 = 57.6k in ASCII format
<ARG> 5 = 15.2k in ASCII format

Example:
<STX>07,1,<ETX>

Response:
<STX><07><,><$><,><ETX>
<STX><07><,><ARG><,><ETX>

where <ARG> = error code

Error Codes TBD,
1 = out of range

5.5.22 Program User Configs

Description:
The host requests that the firmware program the user configs.

Direction:
Host to supply

Syntax:
<STX><09><,><ARG1><,><ARG2><,><ARG3><,><ARG4><,><ARG5><,><ARG6><,><ARG7><,><ARG8><,><ARG9><,><ETX>

Where:
<ARG1> = 1 = ROV enabled, 0 = ROV disabled in ASCII format.
<ARG2> = 0-110 in ASCII format representing the overvoltage percentage.
<ARG3> = 1-600 in ASCII format representing the ramp rate in seconds from .1 to 60sec.
<ARG4> = 1 = AOL enabled, 0 = AOL disabled in ASCII format.value.
<ARG5> = 0-20 in ASCII format representing the arc count.
<ARG6> = 0-60 in ASCII format representing the arc period in seconds.
<ARG7> = 0-500 in ASCII format representing the arc quench time in milli-seconds.
<ARG8> = 1 = ARC re-ramp enabled, 0 = ARC re-ramp disabled in ASCII format.
<ARG9> = 1 = No Arc detect, 0 = Arc detect in ASCII format.

Example:
<STX>09,1,50,100,0,10,30,250,1,0,<ETX>

Response:
<STX><09><,><$><,><ETX>
<STX><09><,><ARG><,><ETX>

where <ARG> = error code

Error Codes
1 in ASCII format = Invalid Arc Rate warning message:
An invalid arc rate(Time period/Arc Count) of more than 1 arc per second has been entered,these values along with the other variables in the command string have been disregarded by the HVPS.

2 in ASCII format = NAD Enabled warning message:
The **N**ot **A**rc **D**etect mode has been enabled. In this mode the HVPS has no Arc shutdown protection. The HVPS is designed to handle 1 arc per second. Exceeding 1 arc per second could cause damage to the HVPS.**HVPS failure caused by excessive arcing will not be covered under the warranty**.

5.5.23 Request unit Scaling

Description:
The host requests that the firmware report the unit scaling.

Direction:
Host to supply

Syntax:
<STX><28><,><ETX>

Example:
<STX>28,<ETX>

Response:
<STX><28><,>< ARG1><,>< ARG2><,><ETX>

Where:
<ARG1> =0-65535 in ASCII format representing the voltage full-scale value.
<ARG2> =0-65535 in ASCII format representing the current full-scale value.

Example:
<STX>28, 7000, 856<ETX>
Voltage full scale = 70.00kV
Current full scale = 8.56mA

5.5.24 Request User Configs

Description:
The host requests that the firmware report the User Configs.

Direction:
Host to supply

Syntax:
<STX><27><,><ETX>

Example:
<STX>27,<ETX>

Response:
<STX><27><,><ARG1><,><ARG2><,><ARG3><,><ARG4><,><ARG5><,><ARG6><,><ARG7><,><ARG8><,><ARG9><,><ETX>

Where:
<ARG1> = 1 = ROV enabled, 0 = ROV disabled in ASCII format.
<ARG2> = 0-110 in ASCII format representing the overvoltage percentage.
<ARG3> = 1-600 in ASCII format representing the ramp rate in seconds from .1 to 60sec.
<ARG4> = 1 = AOL enabled, 0 = AOL disabled in ASCII format.value.
<ARG5> = 0-20 in ASCII format representing the arc count.
<ARG6> = 0-60 in ASCII format representing the arc period in seconds.
<ARG7> = 0-500 in ASCII format representing the arc quench time in milli-seconds.
<ARG8> = 1 = ARC re-ramp enabled, 0 = ARC re-ramp disabled in ASCII format.
<ARG9> = 1 = No Arc detect, 0 = Arc detect in ASCII format.

Example:
<STX>27,1,50,100,0,10,30,250,1,0,<ETX>

5.5.25 Watchdog Enable

Description:
The host requests that the firmware enable the Communication Watchdog.

Direction:
Host to supply

Syntax:
<STX><89><,><ARG><,><ETX>

Where:
<ARG> 1 = enable, 0 = disable in ASCII format

Example:
<STX>89,1,<ETX>

Response:
<STX><89><,><$><,><ETX>
<STX><89><,><ARG><,><ETX>

where <ARG> = error code

5.5.26 Watchdog Tickle

Description:
The host requests that the firmware resets the Watchdog timer.

Direction:
Host to supply

Syntax:
<STX><88><,><ETX>

Response:
<STX><88><,><$><,><ETX>
<STX><88><,><ARG><,><ETX>

where <ARG> = error code

5.5.27 Request Analog Monitor Readbacks

Description:
The host requests that the firmware transmit the present values of Analog Monitor Readbacks.

Direction:
Host to supply

Syntax:
<STX><19><,><ETX>

Example:
<STX><19>,<ETX>

Response:
<STX><19><,><ARG1><,><ARG2><,><ARG3><,><ETX>

Where:
ARG1 = kV monitor = 0 – 4095
ARG2 = mA monitor = 0 – 4095
ARG3 = unused = 0– 4095

Example:
<STX><19>,4095,4095,4095,<ETX>

6.0 SERIAL COMMANDS – RS-232 / USB

6.1 SERIAL INTERFACE PROTOCOL

Serial communications will use the following protocol:

<STX><CMD><,>ARG><,><CSUM><ETX>

Where:

<STX>	= 1 ASCII 0x02 Start of Text character
<CMD>	= 2 ASCII characters representing the command ID
<,>	= 1 ASCII 0x2C character
<ARG>	= Command Argument
<,>	= 1 ASCII 0x2C character
<CSUM>	= Checksum (see section 6.3 for details)
<ETX>	= 1 ASCII 0x03 End of Text character

6.2 COMMAND ARGUMENTS

The format of the numbers is a variable length string. To represent the number 42, the string ‘42’, ‘042’, or ‘0042’ can be used. This being the case, commands and responses that carry data are variable in length.

6.3 CHECKSUMS

The checksum is computed as follows:

- Add the <CMD>, <,>, and <ARG> bytes into a 16 bit (or larger) word. The bytes are added as unsigned integers.
- Take the 2’s compliment (negate it).
- Truncate the result down to the eight least significant bits.
- Clear the most significant bit (bit 7) of the resultant byte, (bitwise AND with 0x7F).
- Set the next most significant bit (bit 6) of the resultant byte (bitwise OR with 0x40).

Using this method, the checksum is always a number between 0x40 and 0x7F. The checksum can never be confused with the <STX> or <ETX> control characters, since these have non-overlapping ASCII values.

If the DSP detects a checksum error, the received message is ignored – no acknowledge or data is sent back to the host. A timeout will act as an implied NACK.

The following is sample code, written in Visual Basic, for the generation of checksums:

```
Public Function ProcessOutputString(outputString As String) As String

Dim i As Integer
Dim CSb1 As Integer
Dim CSb2 As Integer
Dim CSb3 As Integer
Dim CSb$
Dim X

X = 0
For i = 1 To (Len(outputString))        'Starting with the CMD character
X = X + Asc(Mid(outputString, i, 1))    'adds ascii values together
Next i

CSb1 = 256 - X
CSb2 = 127 And (CSb1)        'Twos Complement
CSb3 = 64 Or (CSb2)         'OR 0x40
CSb$ = Chr(Val("&H" & (Hex(CSb3))))
ProcessOutputString = Chr(2) & outputString & CSb$ & Chr(3)

End Function
```

6.4 COMMAND OVERVIEW

Data Byte section of the TCP/IP Datagram			
Command Name	<CMD>	<ARG>	RANGE
Program RS-232 unit baud rate	07	1 ASCII	1 - 5
Program User Configs	09	9 ASCII	See Description
Program kV	10	1-4 ASCII	0-4095
Program mA	11	1-4 ASCII	0-4095
Request kV Setpoint	14	None	-
Request mA Setpoint	15	None	-
Request Analog Monitor Readbacks	19	None	-
Request HV On Hours Counter	21	None	-
Request Status	22	None	-
Request Software Version	23	None	-
Request Hardware Version	24	None	-
Request Web Server Version	25	None	-
Request Model Number	26	None	-
Reset HV On Hours Counter	30	None	-
Reset Faults	31	None	-
Read Interlock Status	55	None	-
Request kV monitor	60	None	-
Request mA monitor	61	None	-
Request –15V LVPS	65	None	-
Wathdog Tickle	88	None	-
Wathdog enable	89	1 ASCII	0 or 1
Turn HV on/off	98	1 ASCII	0 or 1

Program Local/Remote Mode	99	1 ASCII	0 or 1

6.5 RESPONSE OVERVIEW

The command responses will follow the same format as outlined above in section 6.1. This list is comprised of Commands with complex responses only. Commands using a simple response will use the <$> character (ASCII 0x24) as a “Success” response or a single character error code. These responses will be eight ASCII characters in length.

Response Name	<CMD>	Response
Request kV Setpoint	14	8-11 ASCII
Request mA Setpoint	15	8-11 ASCII
Request Analog Monitor Readbacks	19	12-23 ASCII
Request Total Hours High Voltage On	21	14 ASCII
Request Status	22	13 ASCII
Request DSP Software Version	23	18 ASCII
Request Hardware Version	24	10 ASCII
Request Web Server Version	25	18 ASCII
Request Model number	26	12 ASCII
Request User Configs	27	9-17 ASCII
Request unit Scaling	28	24-32 ASCII
Read Interlock Status	55	8 ASCII
Request kV monitor	60	8-11 ASCII
Request mA monitor	61	8-11 ASCII
Request –15V LVPS	65	8-11 ASCII

Request Faults	68	20 ASCII

6.6 COMMAND STRUCTURE

6.6.1 Program kV

Description:
The host requests that the firmware change the setpoint of kV.

Direction:
Host to supply

Syntax:
<STX><10><,><ARG><,><CSUM><ETX>

Where:
<ARG> = 0 - 4095 in ASCII format

Example:
<STX>10,4095,<CSUM><ETX>

Response:
<STX><10><,><$><,><CSUM><ETX>
<STX><10><,><ARG><,><CSUM><ETX>

where <ARG> = error code

Error Codes TBD, 1=out of range

6.6.2 Program mA

Description:
The host requests that the firmware change the setpoint of mA.

Direction:
Host to supply

Syntax:
<STX><11><,><ARG><,><CSUM><ETX>

Where:
<ARG> = 0 - 4095 in ASCII format

Example:
<STX>11,4095,<CSUM><ETX>

Response:
<STX><11><,><$><,><CSUM><ETX>
<STX><11><,><ARG><,><CSUM><ETX>

where <ARG> = error code

Error Codes TBD, 1=out of range

6.6.3 Request Total Hours High Voltage On

Description:
The host requests that the firmware sends the present value of the Total Hours High Voltage On.

Direction:
Host to supply

Syntax:
<STX><21><,><CSUM><ETX>

Example:
<STX>21,<CSUM><ETX>

Response:
<STX><21><,><ARG1>< ARG2>< ARG3><ARG4><ARG5>
<.><ARG6>><,><CSUM><ETX>

Where:
<.> = ASCII 0x2E
ARGx = 0 - 9 in ASCII format

Example:
<STX>21,99999.9,<CSUM><ETX>

6.6.4 Request Status

Description:
The host requests that the firmware sends the power supply status.

Direction:
Host to supply

Syntax:
<STX><22><,><CSUM><ETX>

Example:
<STX>22,<CSUM><ETX>

Response:
<STX><22><,><ARG1><,><ARG2><,><ARG3><,><ARG4><,><ARG5><,
><ARG6><,><ARG7><,><ARG8><,><CSUM><ETX>

Where:
<ARG1> 1 = HvOn, 0 = HvOff
<ARG2> 1 = Interlock 1 Open, 0 = Interlock 1 Closed
<ARG3> 1 = Fault Condition, 0 = No Fault
<ARG4> 1 = Remote Mode, 0 = Local Mode
<ARG5> 1 = I Mode on, 0 = = I Mode off
<ARG6> 1 = ROV Enabled, 0 = ROV Disabled
<ARG7> 1 = AOL Enabled, 0 = AOL Disabled
<ARG8> 1 = Watchdog Enabled, 0 = Watchdog Disabled
Example:
<STX>22,1,1,0,0,0,0,0,0,<CSUM><ETX>

6.6.5 Request DSP Software Part Number/Version

Description:
The host requests that the firmware sends the DSP firmware version.

Direction:
Host to supply

Syntax:
<STX><23><,><CSUM><ETX>

Example:
<STX>23,<CSUM><STX>

Response:
<STX><23><,>< ARG><,><CSUM><ETX>

Where:
<ARG> consists of eleven ASCII characters representing the current firmware part number/version. The format is SWM9999-999

Example:
<STX>23,SWM9999-999,<CSUM><ETX>

6.6.6 Request Hardware Version

Description:
The host requests that the firmware sends the hardware version.

Direction:
Host to supply

Syntax:
<STX><24><,><CSUM><ETX>

Example:
<STX>24,<CSUM><ETX>

Response:
<STX><24><,>< ARG><,><CSUM><ETX>

Where:
<ARG> consists of 3 ASCII characters representing the hardware version. The format is ANN, where A is an alpha character and N is a numeric character

Example:
<STX>24,A01,<CSUM><ETX>

6.6.7 Request Webserver Software Part Number/Version

Description:
The host requests that the firmware sends the Web Server firmware part number/version.

Direction:
Host to supply

Syntax:
<STX><25><,><CSUM><ETX>

Example:
<STX>25,<CSUM><ETX>

Response:
<STX><25><,><ARG><,><CSUM><ETX>

Where:
<ARG> consists of eleven ASCII characters representing the current firmware part number/version. The format is SWM9999-999

Example:
<STX>25,SWM9999-999,<CSUM><ETX>

6.6.8 Request Model Number

Description:
The host requests that the firmware sends the unit model number

Direction:
Host to supply

Syntax:
<STX><26><,><CSUM><ETX>

Example:
<STX>26,<CSUM><ETX>

Response:
<STX><26><,><ARG><,><CSUM><ETX>

Where:
<ARG> consists of five ASCII characters representing the model number. The format is SLMNNANNN or XNNNN, where N is a numeric character and where A is a letter character.

Example:
<STX>25,X9999,<CSUM><ETX>
or
<STX>25,SLM70P600,<CSUM><ETX>

6.6.9 Reset Run Hours

Description:
The host requests that the firmware resets the run hour counter.

Direction:
Host to supply

Syntax:
<STX><30><,><CSUM><ETX>

Example:
<STX>30,<CSUM><ETX>

Response:
<STX><30><,><$><,><CSUM><ETX>

6.6.10 Reset Faults

Description:
The host requests that the firmware resets all Fault messages and indicators.

Direction:
Host to supply

Syntax:
<STX><31><,><CSUM><ETX>

Example:
<STX>31,<CSUM><ETX>

Response:
<STX><31><,><$><,><CSUM><ETX>

6.6.11 Read Interlock Status

Description:
The host requests that the firmware read the status of the interlock channel.

Direction:
Host to supply

Syntax:
<STX><55><,><CSUM><ETX>

Response:
<STX><55><,><ARG1><,><CSUM><ETX>
Where ARG1 is Interlocks 1. A 1 indicates that the Interlock is energized

Example:
<STX>55,1,<CSUM><ETX>

6.6.12 Request kV Monitor

Description:
The host requests that the firmware report kV monitor.

Direction:
Host to supply

Syntax:
<STX><60><,><CSUM><ETX>

Response:
<STX><60><,><ARG><,><CSUM><ETX>

Where:
<ARG>=0-4095 in ASCII format representing unscaled value.

Example:
<STX>60,4095,<CSUM><ETX>

6.6.13 Request mA Monitor

Description:
The host requests that the firmware report mA monitor.

Direction:
Host to supply

Syntax:
<STX><61><,><CSUM><ETX>

Response:
<STX><61><,><ARG><,><CSUM><ETX>

Where:
<ARG>=0-4095 in ASCII format representing unscaled value.

Example:
<STX>61,4095,<CSUM><ETX>

6.6.14 Request –15V LVPS

Description:
The host requests that the firmware report –15V LVPS.

Direction:
Host to supply

Syntax:
<STX><65><,><CSUM><ETX>

Response:
<STX><65><,><ARG><,><CSUM><ETX>

Where:
<ARG>=0-4095 in ASCII format representing unscaled value.

Example:
<STX>65,4095,<CSUM><ETX>

6.6.15 Request Faults

Description:
The host requests that the firmware report Faults.

Direction:
Host to supply

Syntax:
<STX><68><,><CSUM><ETX>

Response:
<STX><68><,><ARG1><,><ARG2><,><ARG3><,><ARG4><,><ARG5><,
><ARG6><><,><ARG7><,><CSUM><ETX>

Where:
<ARGx> 1 = Fault, 0 = No Fault in ASCII format

ARG1 = ARC
ARG2 = Over Temperature
ARG3 = Over Voltage
ARG4 = Under Voltage
ARG5 = Over Current
ARG6 = Under Current
ARG7 = Wathdog

Example:
<STX>67,0,0,0,0,0,1,0,0,<CSUM><ETX>

6.6.16 Program Local/Remote Mode

Description:
The host requests that the firmware to switch between Local and Remote Mode.

Direction:
Host to supply

Syntax:
<STX><99><,><ARG><,><CSUM><ETX>

Where:
<ARG> 1 = Remote, 0 = Local in ASCII format

Example:
<STX>99,1,<CSUM><ETX>

Response:
<STX><99><,><$><,><CSUM><ETX>
<STX><99><,><ARG><,><CSUM><ETX>

where <ARG> = error code

Error Codes TBD,
1 = out of range

6.6.17 Program RS-232 Baud rate

Description:
The host requests that the firmware change the Baud rate for RS-232.

Direction:
Host to supply

Syntax:
<STX><07><,><ARG><,><CSUM><ETX>

Where:
<ARG> 1 = 9.6k in ASCII format
<ARG> 2 = 19.2k in ASCII format
<ARG> 3 = 38.4k in ASCII format
<ARG> 4 = 57.6k in ASCII format
<ARG> 5 = 115.2k in ASCII format

Example:
<STX>07,1,<CSUM><ETX>

Response:
<STX><07><,><$><,><CSUM><ETX>
<STX><07><,><ARG><,><CSUM><ETX>

where <ARG> = error code

Error Codes TBD,
1 = out of range

6.6.19 Program User Configs

Description:
The host requests that the firmware program the user configs.

Direction:
Host to supply

Syntax:
<STX><09><,><ARG1><,><ARG2><,><ARG3><,><ARG4><,><ARG5><,><ARG6><,><ARG7><,><ARG8><,><ARG9><,><CSUM><ETX>

Where:
<ARG1> = 1 = ROV enabled, 0 = ROV disabled in ASCII format.
<ARG2> = 0-110 in ASCII format representing the overvoltage percentage.
<ARG3> = 1-600 in ASCII format representing the ramp rate in seconds from .1 to 60sec.
<ARG4> = 1 = AOL enabled, 0 = AOL disabled in ASCII format.value.
<ARG5> = 0-20 in ASCII format representing the arc count.
<ARG6> = 0-60 in ASCII format representing the arc period in seconds.
<ARG7> = 0-500 in ASCII format representing the arc quench time in milli-seconds.
<ARG8> = 1 = ARC re-ramp enabled, 0 = ARC re-ramp disabled in ASCII format.
<ARG9> = 1 = No Arc detect, 0 = Arc detect in ASCII format.

Example:
<STX>09,1,50,100,0,10,30,250,1,0, <CSUM><ETX>

Response:
<STX><09><,><$><,><CSUM><ETX>
<STX><09><,><ARG><,><CSUM><ETX>

where <ARG> = error code

Error Codes
1 in ASCII format = Invalid Arc Rate warning message:
An invalid arc rate(Time period/Arc Count) of more than 1 arc per second has been entered, these values along with the other variables in the command string have been disregarded by the HVPS.

2 in ASCII format = NAD Enabled warning message:
The **N**ot **A**rc **D**etect mode has been enabled. In this mode the HVPS has no Arc shutdown protection. The HVPS is designed to handle 1 arc per second. Exceeding 1 arc per second could cause damage to the HVPS.**HVPS failure caused by excessive arcing will not be covered under the warranty**.

6.6.20 Request unit Scaling

Description:
The host requests that the firmware report the unit scaling.

Direction:
Host to supply

Syntax:
<STX><28><,><CSUM><ETX>

Example:
<STX>28, <CSUM><ETX>

Response:
<STX><28><,>< ARG1><,>< ARG2><,><CSUM><ETX>

Where:
<ARG1> =0-65535 in ASCII format representing the voltage full-scale value.
<ARG2> =0-65535 in ASCII format representing the current full-scale value.

Example:
<STX>28,7000,856<CSUM><ETX>
Voltage full scale = 70.00kV
Current full scale = 8.56mA

6.6.21 Request User Configs

Description:
The host requests that the firmware report the User Configs.

Direction:
Host to supply

Syntax:
<STX><27><,><CSUM><ETX>

Example:
<STX>27, <CSUM><ETX>

Response:
<STX><27><,><ARG1><,><ARG2><,><ARG3><,><ARG4><,><ARG5><,><ARG6><,><ARG7><,><ARG8><,><ARG9><,><CSUM><ETX>

Where:
<ARG1> = 1 = ROV enabled, 0 = ROV disabled in ASCII format.
<ARG2> = 0-110 in ASCII format representing the overvoltage percentage.
<ARG3> = 1-600 in ASCII format representing the ramp rate in seconds from .1 to 60sec.
<ARG4> = 1 = AOL enabled, 0 = AOL disabled in ASCII format.value.
<ARG5> = 0-20 in ASCII format representing the arc count.
<ARG6> = 0-60 in ASCII format representing the arc period in seconds.
<ARG7> = 0-500 in ASCII format representing the arc quench time in milli-seconds.
<ARG8> = 1 = ARC re-ramp enabled, 0 = ARC re-ramp disabled in ASCII format.
<ARG9> = 1 = No Arc detect, 0 = Arc detect in ASCII format.

Example:
<STX>27,1,50,100,0,10,30,250,1,0, <CSUM><ETX>

6.6.22 Watchdog Enable

Description:
The host requests that the firmware enable the Communication Watchdog.

Direction:
Host to supply

Syntax:
<STX><89><,><ARG><,><CSUM><ETX>

Where:
<ARG> 1 = Enable, 0 = Disable in ASCII format

Example:
<STX>89,1,<CSUM><ETX>

Response:
<STX><89><,><$><,><CSUM><ETX>
<STX><89><,><ARG><,><CSUM><ETX>

where <ARG> = error code

Error Codes TBD,
1 = out of range

6.6.23 Watchdog Tickle

Description:
The host requests that the firmware resets the Watchdog timer.

Direction:
Host to supply

Syntax:
<STX><88><,><CSUM><ETX>

Response:
<STX><88><,><$><,><CSUM><ETX>
<STX><88><,><ARG><,><CSUM><ETX>

where <ARG> = error code

Error Codes TBD,
1 = out of range

6.6.24 Request Analog Monitor Readbacks

Description:
The host requests that the firmware transmit the present values of Analog Monitor Readbacks.

Direction:
Host to supply

Syntax:
<STX><19><,>< CSUM><ETX>

Example:
<STX><19>,< CSUM><ETX>

Response:
<STX><19><,><ARG1><,><ARG2><,><ARG3><,>< CSUM><ETX>

Where:
ARG1 = kV monitor = 0 – 4095
ARG2 = mA monitor = 0 – 4095
ARG3 = unused = 0– 4095

Example:
<STX><19>,4095,4095,4095,< CSUM><ETX>

6.7 SPELLMAN TEST COMMANDS

- Program Hardware Version (Hardware setup)
- Program Model number(Hardware setup)
- Set USB Mode (Program USB)
- Set USB Page Address (Program USB)
- Send USB Page Data (Program USB)
- Toggle Passthrough Mode (Diagnostics)
- Store A/D Calibration Value (Hardware setup)
- Request Miscellaneous Analog Readbacks

Contact Spellman High Voltage for details and the syntax of these commands.

6.8 SERIAL COMMAND HANDLING

6.8.1 Command Time Out The host computer should set a serial time out at approximately 100mS. This allows the DSP to process the incoming message, and transmit a response. The DSP will initiate a reply to incoming messages in approximately 1-2mS, with a worst case of 5mS.

6.8.2 Buffer Flushing

The DSP will flush the incoming serial data buffer every time an STX is received. This provides a mechanism to clear the receive buffer of partial or corrupt messages.

6.8.3 Handshaking

The only handshaking implemented on the host interface, is built in to the implementation of this protocol. That is, the host must initiate all communications. If the supply receives a program command, an acknowledge message is sent back to the host via the “$” message. If the host does not receive an acknowledge within the time out window, the host should consider the message lost or the device off-line.

Similarly, if the supply receives a request command, the requested data is sent back to the host. If the host does not receive the requested data within the time out window, the host should consider the message lost or the device off-line.

This essentially uses the full-duplex channel in a half-duplex communication mode.

HIGH POWER 8C-30C SERIES

8kV to 30kV High Voltage Cap-Charging Supplies

This High Power line of high-voltage regulated DC to DC converters is an extension of the C Series, directly addressing the high power density needs of >30 watt applications. High Power 8C - 30C units provide up to 60/125/250 watts. This high power density is especially suited to high-energy systems with large capacitances, fast repetition rates, or high continuous-DC-power requirements. See Application Note 10 for more changing information. Typical applications for the High Power 8C-30C Series include the following: laser, cap-charger, pulse generators, Q-switch, and TDR test equipment.

- 7 models from 0 to 8kV through 0 to 30kV
- 60, 125, or 250 watts of output power
- Maximum Iout capability down to 0 Volts
- Maximum Iout during charge/rise time
- Output short-circuit protection
- Very fast rise with very low overshoot
- High efficiency
- High power to voltage density
- Very low profile
- Output current & voltage monitors
- >200,000 hour MTBF @65°C
- Fixed-frequency, low-stored-energy design
- UL/cUL Recognized Component; CE Mark (LVD & RoHS)

PARAMETER	CONDITIONS																						UNITS
INPUT		ALL TYPES																					
Voltage Range	Full Power	+ 23 to 30																					VDC
Voltage Range	Derated Power Range	60W, 125W: + 11 to 30, 250W: 15-30																					VDC
Current	Standby / Disable	< 40																					mA
Current	No Load, Max Eout	8C to 15C < 500, 20C to 25C < 600																					mA
Current	Max Load, Max Eout	60W: 3.25, 125W: 6.5, 250W: 13																					A
AC Ripple Current	Nominal Input, Full Load	< 50																					mA p-p
OUTPUT		8C			10C			12C			15C			20C			25C			30C			
Voltage Range	Nominal Input	0 to 8,000			0 to 10,000			0 to 12,000			0 to 15,000			0 to 20,000			0 to 25,000			0 to 30,000			VDC
Power	Nominal Input, Max Eout	60	125	250	60	125	250	60	125	250	60	125	250	60	125	250	60	125	250	60	125	250	Watts
Current	Iout, Entire Output Voltage Range	7.5	15.5	31.2	6	12.5	25	5	10.5	20.8	4	8.3	16.7	3	6.25	12.5	2.4	5	10	2	4.17	8.33	mA
Current Scale Factor	Full Load	4.7	14.2	6.25	4.1	10.9	5	4.0	7.4	4.17	4.0	7.5	3.33	.65	.653	2.5	.65	.650	2	.65	.642	1.67	mA/V
Voltage Monitor Scaling		60W & 125W Models - 1000:1 ± 2% into 10MΩ; 250W Models - 10,000:1 ± 2%																					-
Internal Capacitance	Capacitance / 95% Decay (50Meg Load)	4400/659	2200/330	1500/225	2933/439	1467/220	1500/225	2933/439	1467/220	750/112	2200/330	1100/165	750/112	1320/200	880/132	750/112	1100/165	733/110	500/75	825/125	550/85	500/75	pF/mS
Ripple	Full Load, Max Eout	< 1%												< 1%									V p-p
Rise Time	Max Iout, Various C Loads & Eout	Figure A																					-
Storage Capacitance	Internal	4400	2200	1500	2933	1467	1500	2933	1467	750	2200	1100	750	1320	880	750	1100	733	500	825	550	500	pF
Overshoot	C Load, 0 Eout to Full Eout	< 1%																					V pk
Line Regulation	Nom. Input, Max Eout, Full Power	< 0.01%																					VDC
Static Load Regulation	No Load to Full Load, Max Eout	< 0.01%																					VDC
Stability	30 Min. warmup, per 8 hr/ per day	< 0.01% / < 0.02%																					VDC
PROGRAMMING & CONTROLS		ALL TYPES																					
Input Impedance	Nominal Input	+ Output Models 1.1MΩ to GND, - Output Models 1.1MΩ to +5 Vref																					MΩ
Adjust Resistance	Typical Potentiometer Values	10K to 100K (Pot across Vref. & Signal GND, Wiper to Adjust)																					Ω
Adjust Logic	0 to +5 for +Out, +5 to 0 for - Out	+4.64 VDC for +Output or +0.36 for -Output = Nominal Eout																					-
Output Voltage & Impedance	T=+25°C	+ 5.00VDC ± 1%, Zout = 464Ω ± 1%																					-
Enable/Disable		0 to +0.8V Disable, +2.0 to 32 Enable (Default = Enable)																					VDC
ENVIRONMENTAL		ALL TYPES																					
Operating	Full Load, Max E out, Case Temperature	-40 to +65																					°C
Coefficient	Over the Specified Temperature	±50 (±25 Optional)																					PPM/°C
Thermal Shock	Mil-Std-810, Method 503-4, Proc. II	-40 to +65																					°C
Storage	Non-Operating, Case Temp.	-55 to +105																					°C
Humidity	All Conditions, Standard Package	0 to 95% non-condensing																					-
Altitude	Standard Package, All Conditions	Sea Level through 70,000																					ft
Shock	Mil-Std-810, Method 516.5, Proc. IV	20																					G's
Vibration	Mil-Std-810, Method 514.5, Fig.514.5C-3	10																					G's

Specifications subject to change without notice.

C = uF
V = Volts
I = mA
T = mS

$$T = \frac{C \times V}{I}$$

C = uF
V = kV
I = mA
F = Hz

$$I = C \times V \times F$$

C = uF
V = kV
I = mA
F = Hz

$$F = \frac{I}{C \times V}$$

C = uF
E^2 = kV
J = Ws

$$J = \frac{C \times E^2}{2}$$

Figure A - Rise Time Formulas

NOTES: Capacitance must include HVPS internal Capacitance.

HIGH POWER 8C-30C SERIES

8kV to 30kV High Voltage Cap-Charging Supplies

8C TO 15C - 60/125W

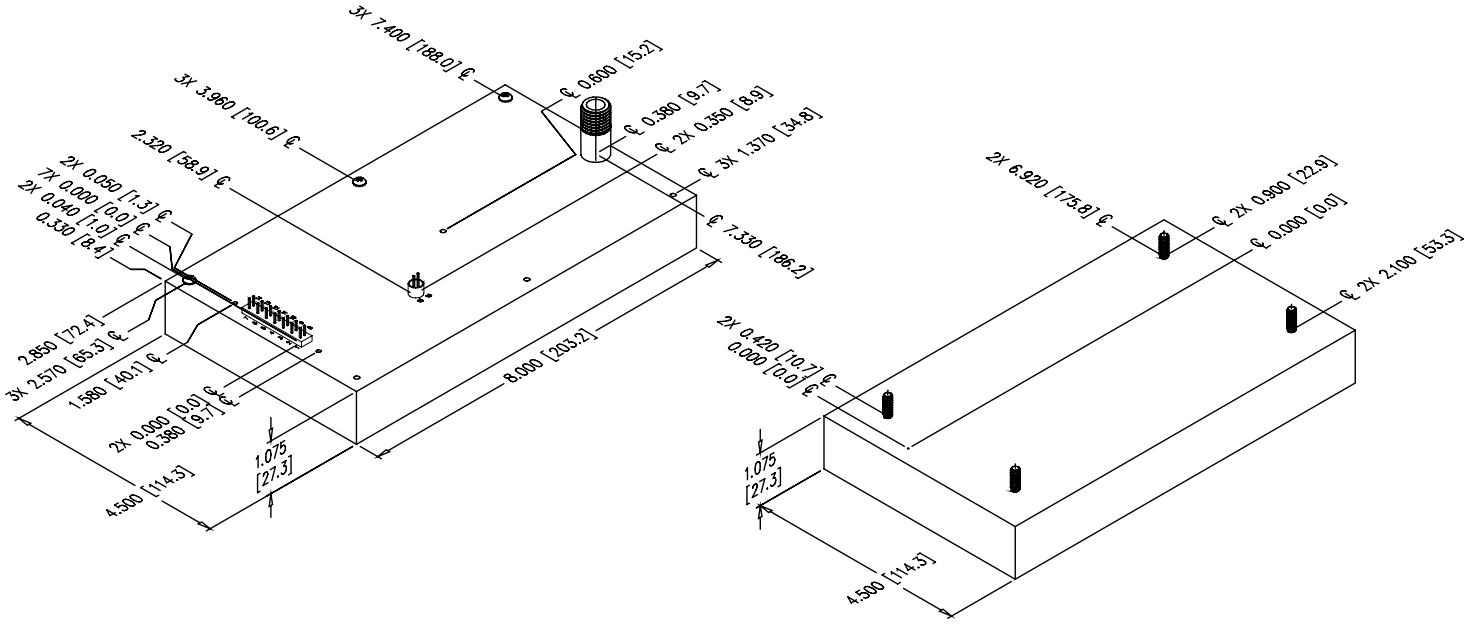

20C TO 30C - 60/125W

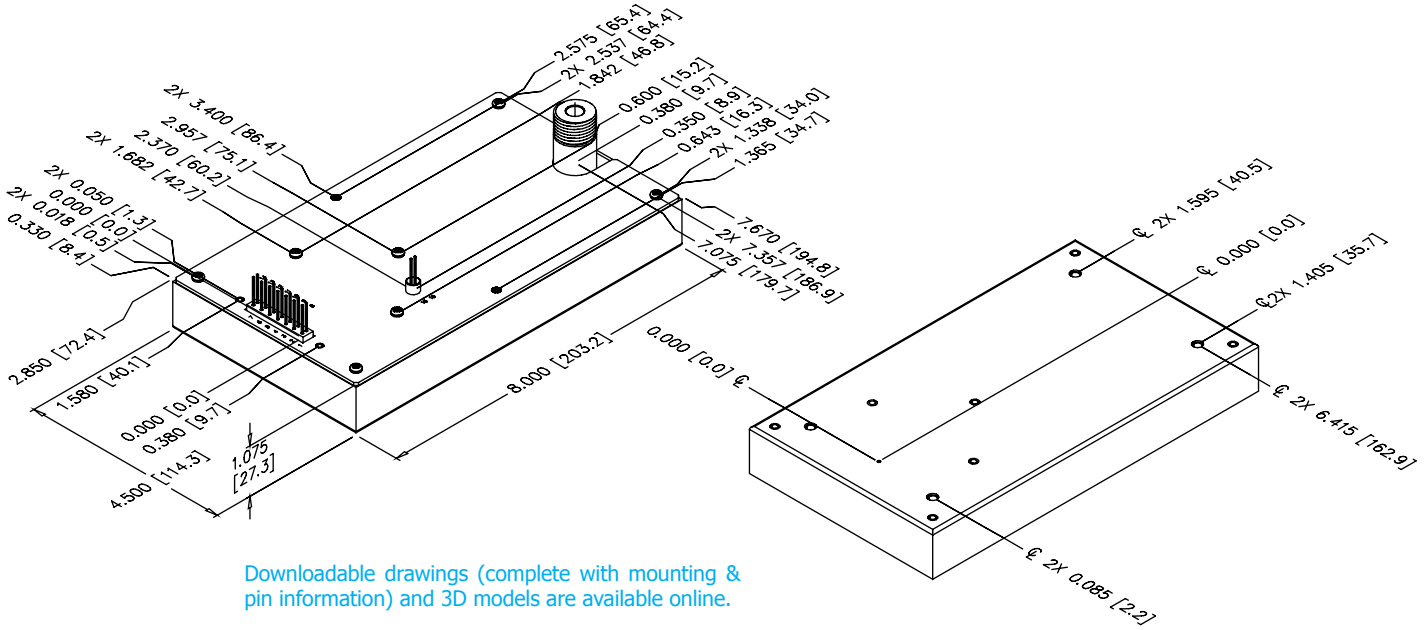

Downloadable drawings (complete with mounting & pin information) and 3D models are available online.

1800 Ocean Avenue, Ronkonkoma, NY 11779
Phone: 1-631-471-4444 Fax: 1-631-471-4696 www.ultravolt.com

HIGH POWER 8C-30C SERIES

8kV to 30kV High Voltage Cap-Charging Supplies

8C TO 30C - 250W (PRELIMINARY)

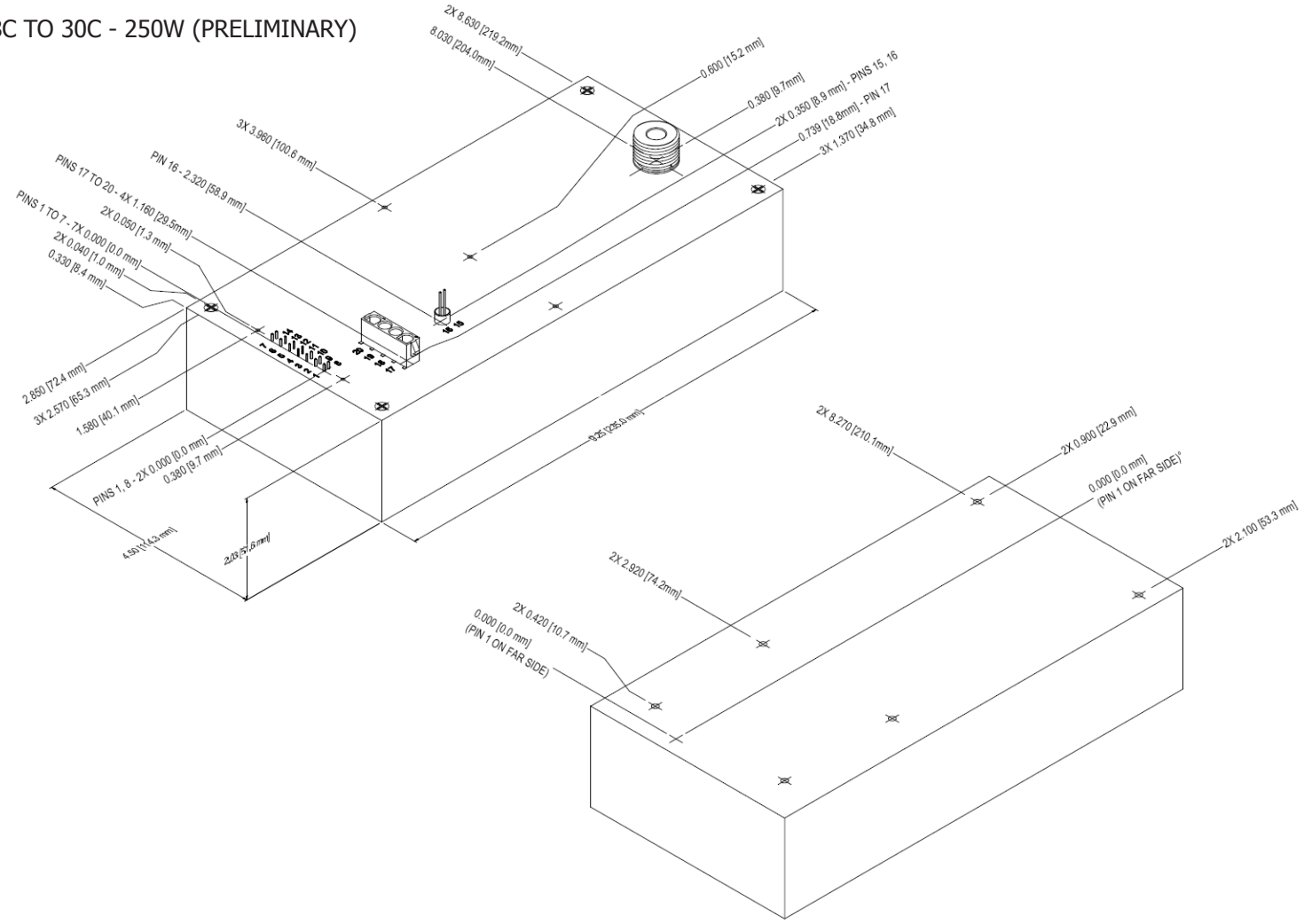

CONSTRUCTION

Epoxy-filled Aluminum Box
Chem film per MIL-A-8625 Type II (Anodizing)

SIZE - 60 & 125W MODELS

Volume 38.7 in³ (634cc)
Weight 2.6 lbs. (1.18kg)

SIZE - 250W MODELS

Volume 84.5 in³ (1386cc)
Weight 5.6 lbs. (1.18kg)

TOLERANCE

Overall ±0.025" (0.64)
Pin to Pin ±0.015" (0.38)
Hole to hole location ±0.025" (0.64)

PINS

Gold-plated 0.025 (0.64) sq.
The center of the pins and mounting holes are located from the center of pin 1
Pins 1 thru 14 spacing 0.100 (2.54) x 0.200 (5.08) on center, height from cover 0.280 (7.11) min
Pins 15 and 16 spacing 0.100 (2.54) on center, height from cover 0.450 (11.43) min

HV OUTPUT CONNECTION

Unit requires an LGH flying lead connector for proper operation:
8C to 15C (60W & 125W Models) = CA-20KV-1000
20C to 30C (60W & 125W Models) = CA-40KV-1000
8C to 30C (250W Models) = CA-40KV-1000

1800 Ocean Avenue, Ronkonkoma, NY 11779
Phone: 1-631-471-4444 Fax: 1-631-471-4696 www.ultravolt.com

HIGH POWER 8C-30C SERIES

8kV to 30kV High Voltage Cap-Charging Supplies

CONNECTIONS	
PIN	FUNCTION
1 & 8	Input-Power Ground Return
2 & 9	Positive Power Input
3	Iout Monitor
4	Enable/Disable
5	Signal Ground Return
6	Remote Adjust Input
7	+5VDC Reference Output
10	N/C (or Arc Detect option)
11, 12, & 13	N/C
14	Eout Monitor
15 & 16	HV Ground Return

All grounds joined internally. Power-supply mounting points isolated from internal grounds by >100kΩ, .01uF / 500V (Max).

ORDERING INFORMATION		
Type	0 to 8,000 VDC Output	8C
	0 to 10,000 VDC Output	10C
	0 to 12,000 VDC Output	12C
	0 to 15,000 VDC Output	15C
	0 to 20,000 VDC Output	20C
	0 to 25,000 VDC Output	25C
	0 to 30,000 VDC Output	30C
Input	24VDC Nominal	24
Polarity	Positive Output	-P
	Negative Output	-N
Power	60 Watts Output	60
	125 Watts Output	125
	250 Watts Output	250
Heat Sink	.400" High (sized to fit case)	-H
PCB Support	(5) 0.187" standoffs on top cover	-Z11
Enhanced Interface	5V Controls and Monitors	-I5
	10V Control and Monitors	-I10
Options	Arc Detect	-AD
	Arc Quench	-AQ
	25PPM Temperature Coefficient	-25PPM

Note: For more information on the enhanced interface options, download the I5/I10 Option datasheet.

Example: 8C24-P125

Type — Voltage, Model

Input

Polarity

Power

Popular accessories ordered with this product include CONN-KIT-HP, BR-7 and BR-8 mounting bracket kits and our full range of high voltage output connectors (see Accessories & Connectors datasheet).

CE c UL us

IEC-60950-1

RoHS COMPLIANT

Non-RoHS compliant units are available. Please contact the factory for more information.

Manufactured in USA

Rev. AB 12/14

1800 Ocean Avenue, Ronkonkoma, NY 11779
Phone: 1-631-471-4444 Fax: 1-631-471-4696 www.ultravolt.com

-I5 OPTION & -I10 OPTION

Enhanced Interface Options

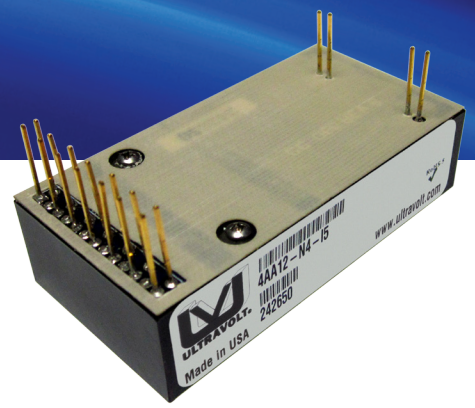

The –I5 and –I10 enhanced interface options further standardize and simplify the process of interfacing control electronics, both analog and digital, to an UltraVolt high voltage power supply. The interface features fixed ranges of calibrated control voltages and buffered monitor signals, eliminating the need for external scaling resistors or op-amps to achieve standard control ranges. Therefore, output control is always 0 to +5VDC (-I5) or 0 to +10VDC (-I10) for 0 to full scale output of positive or negative models. Likewise, output monitors are always 0 to +5VDC (-I5) or 0 to +10VDC (-I10) for 0 to full scale output. The current monitor is nulled to eliminate currents related to HV regulation and monitoring circuits. In conjunction with features such as constant current programming and constant voltage/constant current (CV/CC) auto crossover critical applications can be supported without additional circuitry.

The -I5 Option and -I10 Option are available on AA Series, A Series, High Power C Series, 10A Series modules, and F Option. Either option fits within the standard package size of the modules. On the AA Series and 10A Series models a double row header replaces the single row of pins.

For additional information on interfacing with the -I5 Option and -I10 Option, please review the -I5/-I10 Options Technical Note.

- Buffered, low output impedance and nulled current monitor
- Buffered, low output impedance voltage monitor
- Programming accuracy of ±1% full scale
- 0 to +5V or 0 to +10V remote programming for all polarites
- 0 to +5V or 0 to +10V remote programming for all modes
- +5V or +10V reference, ±0.05%, 5PPM/°C
- Constant voltage / constant current (CVCC) auto-crossover
- Current and voltage mode indicators

Typical applications for the -I5 Option or -I10 Option include: bias supplies, detectors, piezos, amplifiers, photomultiplier tubes (PMT), laser, cap-charging, pulsed power, pulse generators, test equipment, high pot testers, automated test equipment (ATE), and electrostatic precipitators.

PARAMETER	CONDITIONS	MODELS		UNITS
OUTPUT		-I5	-I10 (24Vin ONLY)	
Voltage Monitor Scale Factor	0 to Output Voltage	0 to +5 ± 1% Full Scale	0 to +10 ± 1% Full Scale	VDC
Current Monitor Scale Factor	0 to Output Current	0 to +5 ± 1% Full Scale	0 to +10 ± 1% Full Scale	VDC
PROGRAMMING & CONTROLS		ALL TYPES		
Input Impedance	Nominal Input	10MΩ to GND	10MΩ to GND	-
Adjust Resistance	Typical Potentiometer Values	10K to 100K (Pot across Vref. & Signal GND, Wiper to Adjust)		Ω
Adjust Logic	0 to 100% of Output	0 to +5.00 ± 1% Full Scale	0 to +10.00 ± 1% Full Scale	VDC
Reference Voltage	T=+25°C	+ 5.00 ± 0.1%	+10.00 ± 0.1%	VDC
Enable/Disable (ON/OFF)		0 to +0.5 Disable, +2.4 to 32 Enable (Default Open Circuit= Disabled)		VDC
Current Mode Indicator		Open drain indicator, active (pulled low) when unit is in current regulation, 100mA max current sink		-
Voltage Mode Indicator		Open drain indicator, active (pulled low) when unit is in voltage regulation, 100mA max current sink		-
Output Voltage Offset		± 0.2% of Max Vout		-

*All other specifications are in accordance with the specific model base datasheet. Specifications are subject to change without notice.

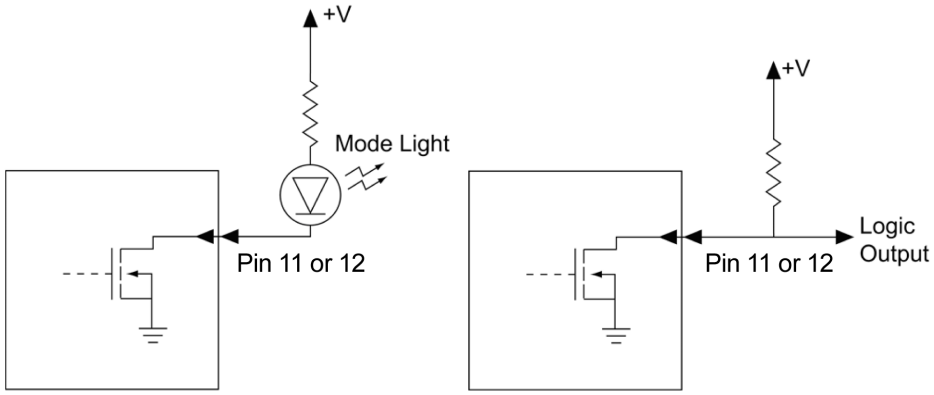

Figure 1: Typical Mode Indicator on the -I5 Option and -I10 Option

-I5 OPTION & -I10 OPTION

Enhanced Interface Options

I5/I10 ON AA SERIES & 10A SERIES

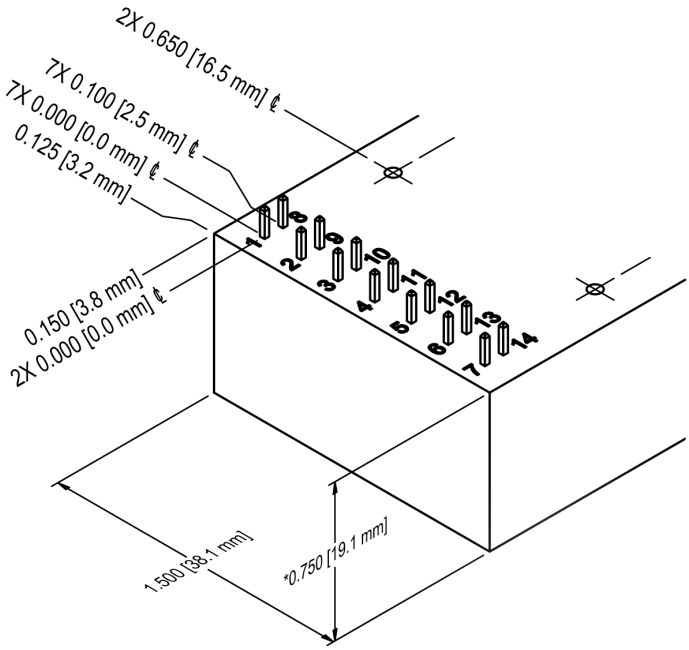

I5/I10 ON HIGH POWER C SERIES

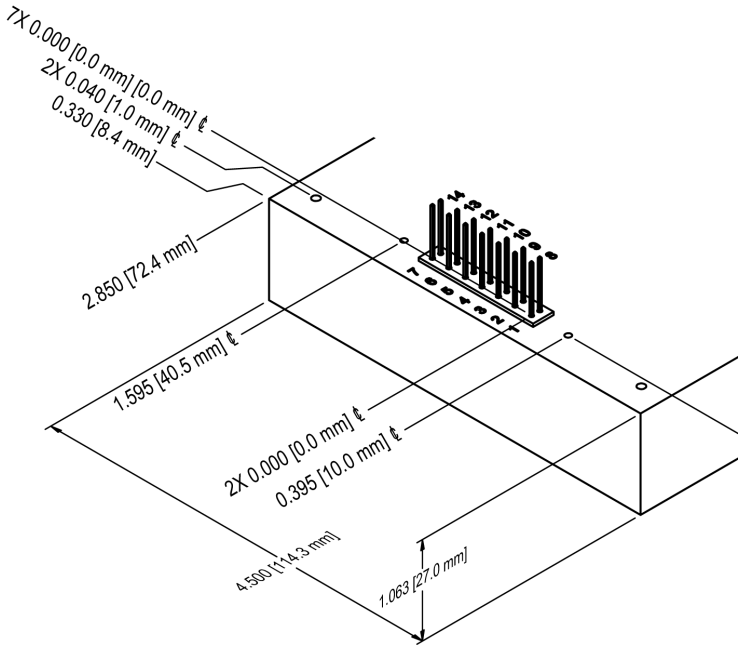

Downloadable drawings (complete with mounting & pin information) and 3D models are available online.

CONNECTIONS	
PIN	FUNCTION
1	Power Ground
2	Input Power
3	Buffered Current Monitor (5mA Maximum)
4	Enable (ON/OFF)
5	Signal Ground
6	Voltage Programming
7	Reference Voltage (5mA Maximum Sourcing)
8	Power Ground/HV Return
9	Input Power
10	N/C
11	Current Mode Indicator
12	Voltage Mode Indicator
13	Current Programming
14	Buffered Voltage Monitor (5mA Maximum)
15 & 16	HV Ground Return
17 & 18	HV Output

IEC-60950-1

Non-RoHS compliant units are available. Please contact the factory for more information.

Manufactured in USA

ORDERING INFORMATION	
5V Control & Monitors	-I5
10V Control & Monitors (24Vin only)	-I10

*The -I5 option and -I10 option are compatible with all standard module options.

Example: 1AA24-P20-I10

Option (Enhanced Interface)

Rev. G 10/14

1800 Ocean Avenue, Ronkonkoma, NY 11779
Phone: 1-631-471-4444 Fax: 1-631-471-4696 www.ultravolt.com

UltraVolt's "A" Series units are designed for DC-bias applications with feedback compensation optimized for dynamic loading. Multiple tuned and untuned LC and RC filters provide low ripple without a need for external capacitors. "A" Series units are applicable to low-speed, capacitor-charging applications. When calculating T_{rise}, the output charge current available is 66% of rated Iout and capacitance-to-charge should have the "A" Series unit's internal capacitance added.

UltraVolt's "C" Series units are designed specifically for pulsed loads and high-speed charging of small and large capacitive loads. DC and AC feedback loops are compensated to provide fast rise time with low overshoot. Current-limit circuits are enhanced to get in and out of limit as fast as possible to maintain high average charge currents while protecting the high-voltage power supply (HVPS) power stage. When calculating "C" Series T_{rise}, the output charge current available is 100% of rated I_{out}. "C" Series units have ½ to 1/10 of the filter capacitance of "A" Series units, allowing more energy to go to the load capacitance (see Fig. F in the "C" Series datasheet). When using a "C" Series unit in a DC-bias application, an external capacitor is recommended for filtering.

CONNECTIONS:

Note: **CAP LOAD MUST RETURN** to *HV Ground Return* (pin 8).

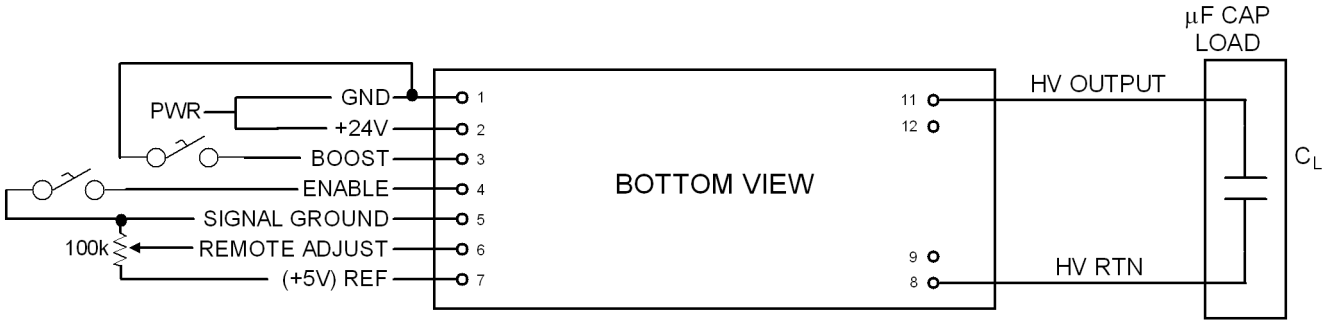

"20W/30W"

If the HVPS is to be grounded to the case, it should also be grounded via pin 8.

ENABLE:

Using *Enable/Disable* (pin 4) to activate the power supply after input power has been applied permits the user to use TTL logic to control HV outputs, (i.e. "1" state = ON, "0" state = OFF). This can be helpful in setting up redundant interlocks or shutting off the HVPS prior to firing a high-energy load. It also acts as an easy method to measure rise time by connecting the oscilloscope external sweep trigger input to the *Enable/Disable* (pin 4) prior to generating a positive "1" rise command (see Application Note #1).

RISE TIME:

Rise times are measured from start of discharge to the time required to rise within 99% of final regulated output. All rise-time data, however, is taken at +24VDC because different input-voltage

sources have somewhat different effects on rise time/overshoot (depending on capacitive load used).

The rise time required to charge an external capacitor load (C_L) can be computed in accordance with the formula shown below:

$$T = \frac{(C_L + C_{int})\ Volts}{(I_{short})}$$

Where:

T = Rise time in milliseconds to within 1% of final value (using an enable command)
C_L = External load capacitance in micro farads
C_{int} = Internal supply capacitance (see UV HVPS datasheet Fig. F)
Volts = Voltage in volts to which the capacitor is charged, starting from 0 volts
I_{short} = The output current of the "C" Series power supply in milliamperes when measured under output short-circuit conditions.

HIGH CURRENT PULSED APPLICATIONS:

In cases when large transient discharges of small duration are applied to the output of a "C" Series unit, the user may wish to isolate the "C" Series power supply from the load C_L. This is typically done to place a more average current demand on the high-voltage power supply, keeping peak currents below the HVPS current-limit point. This allows the HVPS to provide the maximum average power to the load by adding a filter cap directly across the *HV Output* (pins 10 & 11) and *HV Ground Return* (pins 8 & 9). A 10Ω to 1kΩ resistor can then be added between the HV output and the load C_L. This will also reduce the tendency to introduce overshoot in the output waveform, which could cause a ringing on the HV output when driving certain types of loads (see diagram below).

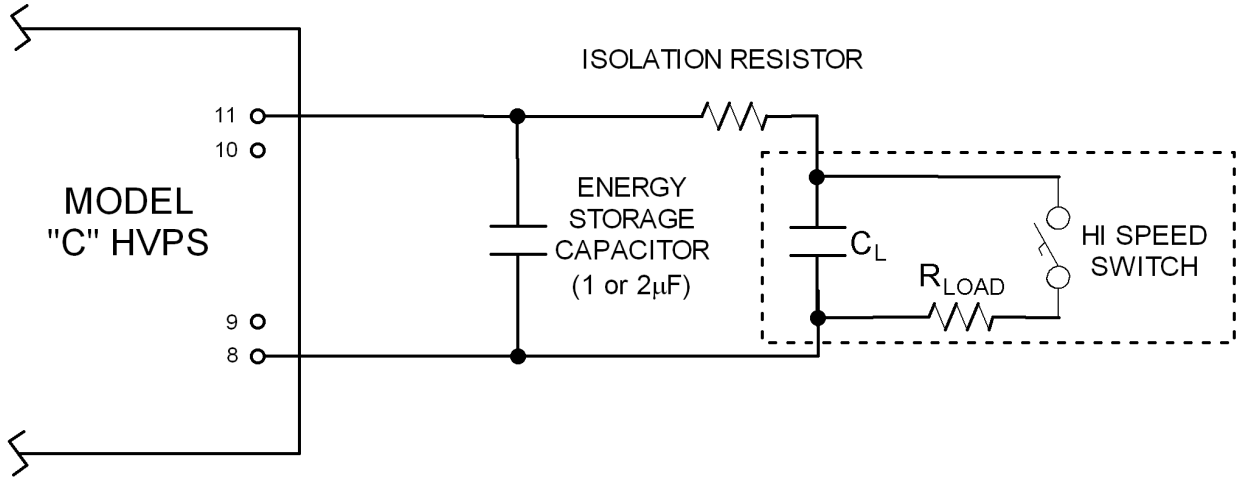

Note: The energy-storage capacitor and the isolation resistor control "pulse droop" during high-discharge-current conditions and average the peak current, thereby reducing the amount of time the HVPS is in peak current limit.

Specification for the Charge Supplies
Capacitor Charge/Discharge Power Supply (CCDPS) for FLARE

February 27, 2016

Contents

List of Tables

List of Figures

1 Overview

A FLARE CCDPS module consists of a number of storage capacitors connected in parallel to a discharge switch. Each module is charged by a matched pair of switching power supplies, connected together to produce a bipolar output. In normal operation, a DPST normally-open relay closes for the charging period and disconnects the charging supplies prior to discharge. A network of resistors and diodes provide protection for the power supply under several failure scenarios discussed in Section 4.

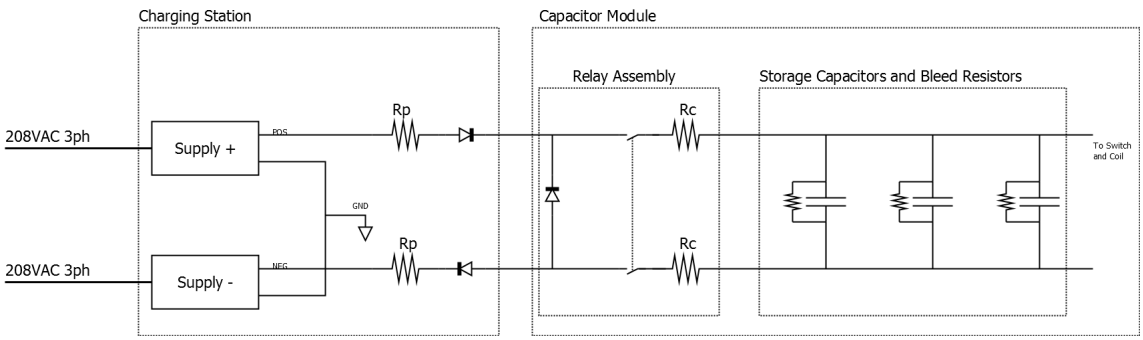

Figure 1: Charging scheme in use for the FLARE CCDPS banks. The resistor values are given in Table 1.

2 Charging Supplies

Each bank for the experiment has at least two supplies - having equal positive output and negative output to produce a bipolar output. TDK-Lambda supplies are used heavily, as their supply curves are closer to constant-power and are therefore more cost-effective in meeting the charge time specification (whereas the Spellman supply is constant-current, resulting in a power output that is quadratic in time). PFA and PFB are charged by the separate bipolar supplies to support charging to different voltages, as are TFA and TFB similarly. Under initial operation the reduced-energy banks will be connected in parallel, trading operational flexibility for reduced expenditures in the early phase. All charging supplies operate on 3-phase 208VAC or 24VDC. For the 24VDC modules a power supply is included so all the power supplies ultimately derive power from 208VAC.

	OH	EF	GF	PFA/B	TFA/B	DCI	DCO
Supply models (see table below)	(b)	(c)	(a)x3	(b)	(d)	(e)	(f)
Protection Resistor value (Rp) [Ω]	180	2.2	54	100	640	180k	70k
Protection Resistor rating [W]	50	20	200	100	20	1	1
Charge Resistor value (Rc) [Ω]	1600	10	720	2000	5600	1.6M	640k
Charge Resistor rating [W]	2000	2000	2000	2000	2000	10	10
Charge module bleed resistor value (Rb) [MΩ]	-	-	-	-	-	2000	800

	Manufacturer	V_{max} [kV]	Qty. Ea. full power	Qty. Ea. initial	Supply (+) model	Supply (-) model
(a)	TDK-Lambda	10	3	1	802L-10kV-POS-208VAC	802L-10kV-NEG-208VAC
(b)	TDK-Lambda	10	3	1	402L-10kV-POS-208VAC	402L-10kV-NEG-208VAC
(c)	TDK-Lambda	1	1	1	402L-1kV-POS-208VAC	402L-1kV-NEG-208VAC
(d)	Spellman	10	2	1	SLM10P1200	SLM10N1200
(e)	UltraVolt	30	1	-	30C24-P60-I10	30C24-N60-I10
(f)	UltraVolt	30	1	-	30C24-P125-I10	30C24-N125-I10

Table 1: Charge supply and resistor specifications.

	Supply Model	Qty. Ea. full power	Current draw (ea) [A]	Subtotal [A]
(a)	TDK-Lambda 802L	6	50	240
(b,c)	TDK-Lambda 402L	8	25	160
(d)	Spellman SLM10	2	7	14
(e,f)	Mean Well LRS-350-24	1	2	2
			Total Amps:	416

Table 2: Facility power requirements for charging supplies. All supplies operate on 208VAC 3-phase.

Manufacturer	HV ON pins	$V_{control}$ range	$V_{control}$ pin	Voltage ref (GND) pin
TDK-Lambda 802L	8,14	0-10V	22	24
TDK-Lambda 402L	8,14	0-10V	22	24
Spellman SLM10	11,12 (J2)	0-10V	3	9
Advanced Energy/UltraVolt	4,7	0-10V	6	5

Table 3: Supply control interface.

Facility power requirements for the charging supplies are listed in Table 3. All charge supplies shall have their power interrupted by normally-open relay upon receipt of the Emergency Stop signal.

The high voltage output stage of each supply shall be enabled by external relay-closure at the CCDPS control computer. All charging supplies are controlled by 0-10VDC analog signal representing a charge voltage from 0 to the maximum supply output voltage listed in Table 1. This control signal shall be produced by analog output at the CCDPS control computer.

3 Charge Connect Modules

One charge connect module is installed at each capacitor bank module. The charge connect module consists of two charge resistors, one DPST relay for connecting the charge supply to the bank, and one protection diode, as seen in Figure 2. The charge resistors reduce the risk of charging supply damage in the case of a busswork arc, ground fault, or capacitor failure; they are rated to 2kW and are of wire-wound type (as the added inductance improves fault isolation) except for DCI and DCO which only require 10W power rating. The role of the protection diode is described in Section 4.

The DCI and DCO modules utilize the 60kV variant of the charge connect module, which is designed for immersion of the components in insulating oil. The 60kV variant may be operated below 30kV without oil. Included in this variant is a bleed resistor that slowly discharges the capacitor as a final redundant energy dump. The bleed resistor is included with the charge connect module in this case in order to reduce the component count near the discharge and crowbar switches, enabling the lowest inductance design. The larger, lower-voltage banks utilize a bleed resistor installed on each individual capacitor; those are discussed in the Dump section of the specification of each of those banks. The 60kV charge connect module also includes the supply protection resistors so that they are immersed in oil without requiring another oil reservoir.

4 Charge supply protection

If a bank pre-fires, the charge relays will still connect the charging supplies to the bank and any programmed crowbar will not operate. This potentially presents a large reversed voltage to the charging supply. The charging supply might also be exposed to reversed voltages if the charge disconnect relay fails in the closed state. A protection diode is installed across the charging supply connection to mitigate these risks. Under normal charging the diode is reverse-biased and does not conduct appreciable current. In the event of a pre-fire and bank reversal the diode becomes forward-biased. The current in the diode is then limited by the

charge resistor, and the voltage reversal presented to the charging supply is limited to the forward voltage drop of the diode.

Protection resistors are installed on the output of each power supply that operate in complement to the protection diodes described above. If a connected capacitor bank pre-fires, reversed voltages on the charging supply cable are limited to the protection diode's forward voltage drop; the additional protection resistor limits the current that arises in the supplies' internal protection diodes due to the resulting forward bias. Additionally if a short-circuit failure occurs along the charge line the protection resistors will limit the prompt current until the supplies can register the overload condition. These resistors are designed not to limit the supply current under normal operation. The combination of charge resistor, protection diode, and protection resistor follows the recommendations of Ref. [2], adapted to a bipolar supply.

In the event of a ground fault the bipolar capacitor bank will shift far away from balanced voltages – potentially doubling the voltage with respect to ground. If such a fault occurs while the charge disconnect relay is still connected to the charge supply then the lifted voltage might destroy the supply. Output diodes are installed that would become reverse-biased in this case, providing a voltage drop to match the supply output and preventing damage.

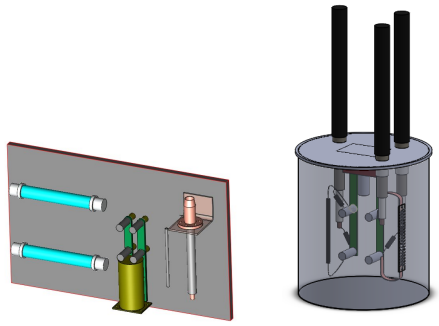

(a) (b)

Figure 2: Charge connect module CAD models: (a) 20kV variant, (b) 60kV variant. The resistor values are given in Table 1.

5 References

References

[1] Statement of Work for Design of Capacitor Charge/Discharge Power Supply (CCDPS) for FLARE FLARE-CCDPS-150828, Revision 0, Sept. 9th 2015

[2] Interfacing Pulsed Power Systems to Switching Power Supplies, Presented at International Power Modulator Conference, Hollywood, California, July 1-3, 2002

6 Appendices

6.1 Vendor specifications

350W Single Output Switching Power Supply

LRS-350 series

Features

- AC input range selectable by switch
- Withstand 300VAC surge input for 5 second
- Protections: Short circuit / Overload / Over voltage / Over temperature
- Forced air cooling by built-in DC fan
- Built-in cooling Fan ON-OFF control
- 1U low profile
- Withstand 5G vibration test
- LED indicator for power on
- No load power consumption<0.75W
- 100% full load burn-in test
- High operating temperature up to 70℃
- Operating altitude up to 5000 meters (Note.8)
- High efficiency, long life and high reliability
- 3 years warranty

Applications

- Industrial automation machinery
- Industrial control system
- Mechanical and electrical equipment
- Electronic instruments, equipments or apparatus

Description

LRS-350 series is a 350W single-output enclosed type power supply with 30mm of low profile design. Adopting the input of 115VAC or 230VAC (select by switch), the entire series provides an output voltage line of 3.3V, 4.2V, 5V, 12V, 15V, 24V, 36V and 48V.

In addition to the high efficiency up to 89%, with the built-in long life fan LRS-350 can work under -25~+70℃ with full load. Delivering an extremely low no load power consumption (less than 0.75W), it allows the end system to easily meet the worldwide energy requirement. LRS-350 has the complete protection functions and 5G anti-vibration capability; it is complied with the international safety regulations such as UL60950-1. LRS-350 series serves as a high price-to-performance power supply solution for various industrial applications.

Model Encoding

LRS - 350 - 3.3

- 3.3 — Output voltage
- 350 — Output power
- LRS — Series name

SPECIFICATION

MODEL		LRS-350-3.3	LRS-350-4.2	LRS-350-5	LRS-350-12	LRS-350-15	LRS-350-24	LRS-350-36	LRS-350-48
OUTPUT	DC VOLTAGE	3.3V	4.2V	5V	12V	15V	24V	36V	48V
	RATED CURRENT	60A	60A	60A	29A	23.2A	14.6A	9.7A	7.3A
	CURRENT RANGE	0 ~ 60A	0 ~ 60A	0 ~ 60A	0 ~ 29A	0 ~ 23.2A	0 ~ 14.6A	0 ~ 9.7A	0 ~ 7.3A
	RATED POWER	198W	252W	300W	348W	348W	350.4W	349.2W	350.4W
	RIPPLE & NOISE (max.) Note.2	150mVp-p	150mVp-p	150mVp-p	150mVp-p	150mVp-p	150mVp-p	200mVp-p	200mVp-p
	VOLTAGE ADJ. RANGE	2.97 ~ 3.6V	3.6 ~ 4.4V	4.5 ~ 5.5V	10.2 ~ 13.8V	13.5 ~ 18V	21.6 ~ 28.8V	32.4 ~ 39.6V	43.2 ~ 52.8V
	VOLTAGE TOLERANCE Note.3	±4.0%	±4.0%	±3.0%	±1.5%	±1.0%	±1.0%	±1.0%	±1.0%
	LINE REGULATION Note.4	±0.5%	±0.5%	±0.5%	±0.5%	±0.5%	±0.5%	±0.5%	±0.5%
	LOAD REGULATION Note.5	±2.5%	±2.5%	±2.0%	±1.0%	±0.5%	±0.5%	±0.5%	±0.5%
	SETUP, RISE TIME	1300ms, 50ms/230VAC 1300ms,50ms/115VAC at full load							
	HOLD UP TIME (Typ.)	16ms/230VAC 12ms/115VAC at full load							
INPUT	VOLTAGE RANGE	90 ~ 132VAC / 180 ~ 264VAC by switch 240 ~ 370VDC (switch on 230VAC)							
	FREQUENCY RANGE	47 ~ 63Hz							
	EFFICIENCY (Typ.)	79.5%	81.5%	83.5%	85%	86%	88%	88.5%	89%
	AC CURRENT (Typ.)	6.8A/115VAC 3.4A/230VAC							
	INRUSH CURRENT (Typ.)	60A/115VAC 60A/230VAC							
	LEAKAGE CURRENT	<2mA / 240VAC							
PROTECTION	OVER LOAD	110 ~ 140% rated output power							
		Protection type : Hiccup mode, recovers automatically after fault condition is removed							
	OVER VOLTAGE	3.8 ~ 4.45V	4.6 ~ 5.4V	5.75 ~ 6.75V	13.8 ~ 16.2V	18 ~ 21V	28.8 ~ 33.6V	41.4 ~ 46.8V	55.2 ~ 64.8V
		Protection type : Hiccup mode, recovers automatically after fault condition is removed							
	OVER TEMPERATURE	Hiccup mode, recovers automatically after fault condition is removed							
FUNCTION	FAN ON/OFF CONTROL (Typ.)	RTH3≧50℃ FAN ON, ≦40℃ FAN OFF							
ENVIRONMENT	WORKING TEMP.	-25 ~ +70℃ (Refer to "Derating Curve")							
	WORKING HUMIDITY	20 ~ 90% RH non-condensing							
	STORAGE TEMP., HUMIDITY	-40 ~ +85℃, 10 ~ 95% RH							
	TEMP. COEFFICIENT	±0.03%/℃ (0 ~ 50℃)							
	VIBRATION	10 ~ 500Hz, 5G 10min./1cycle, 60min. each along X, Y, Z axes							
SAFETY	SAFETY STANDARDS	UL60950-1 approved							
	WITHSTAND VOLTAGE	I/P-O/P:3KVAC I/P-FG:2KVAC O/P-FG:0.5KVAC							
	ISOLATION RESISTANCE	I/P-O/P, I/P-FG, O/P-FG:100M Ohms/500VDC / 25℃/ 70% RH							
OTHERS	MTBF	327.9K hrs min. MIL-HDBK-217F (25℃)							
	DIMENSION	215*115*30mm (L*W*H)							
	PACKING	0.76Kg; 15pcs/12.4Kg/0.78CUFT							

NOTE

1. All parameters NOT specially mentioned are measured at 230VAC input, rated load and 25℃ of ambient temperature.
2. Ripple & noise are measured at 20MHz of bandwidth by using a 12" twisted pair-wire terminated with a 0.1uf & 47uf parallel capacitor.
3. Tolerance : includes set up tolerance, line regulation and load regulation.
4. Line regulation is measured from low line to high line at rated load.
5. Load regulation is measured from 0% to 100% rated load.
6. Length of set up time is measured at cold first start. Turning ON/OFF the power supply very quickly may lead to increase of the set up time.
7. The 150% peak load capability is built in for up to 1 second for 12~48V.LRS-350 will enter hiccup mode if the peak load is delivered for over 1 second and will recover once it resumes to the rated current level(115VAC/230VAC).
8. The ambient temperature derating of 5℃/1000m is needed for operating altitude greater than 2000m(6500ft).

Block Diagram

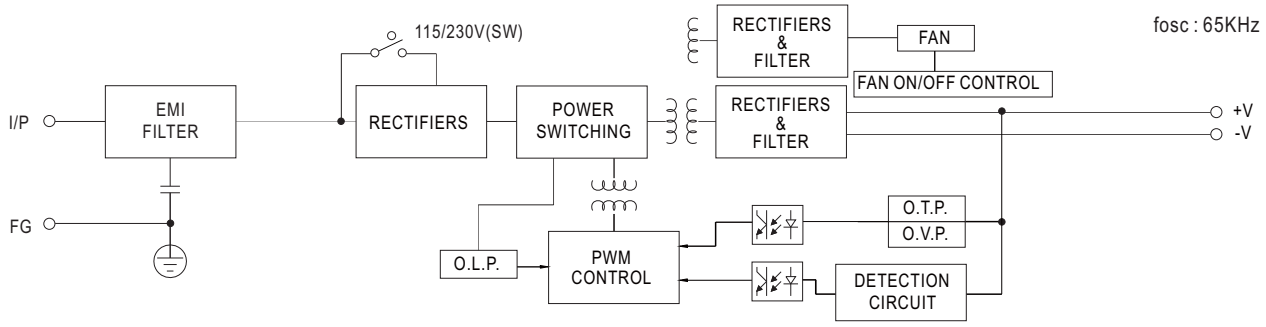

Derating Curve

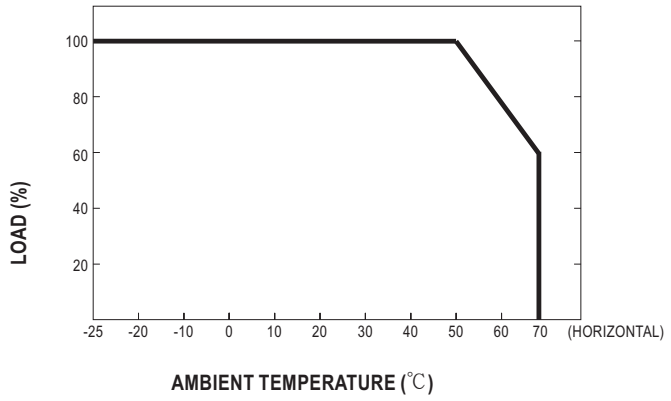

Static Characteristics

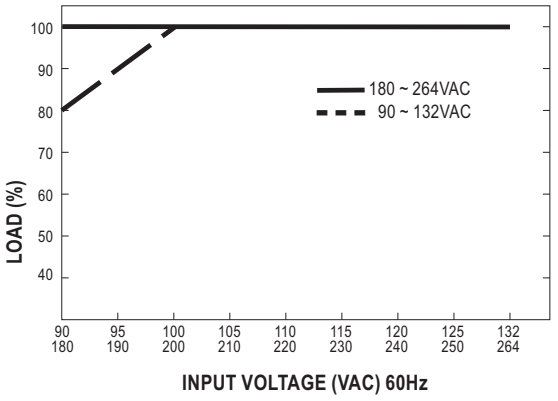

■ Mechanical Specification

Case No.207A Unit:mm

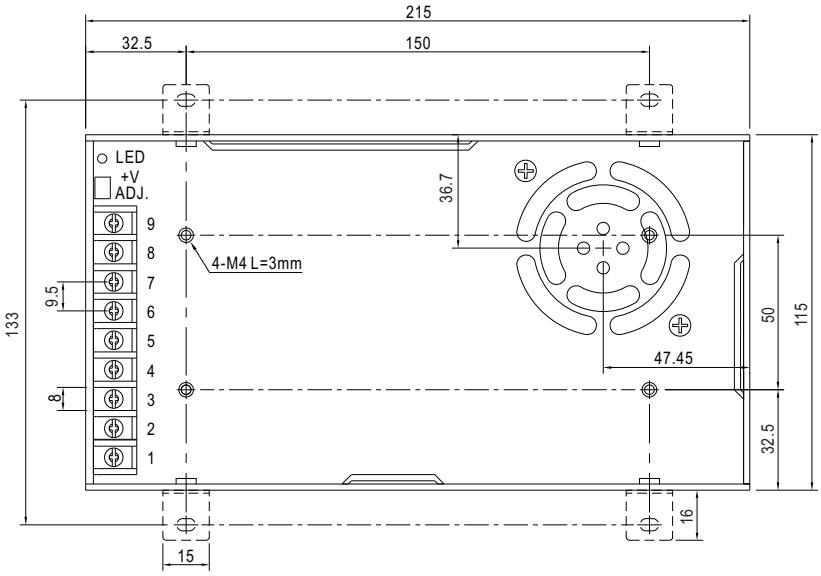

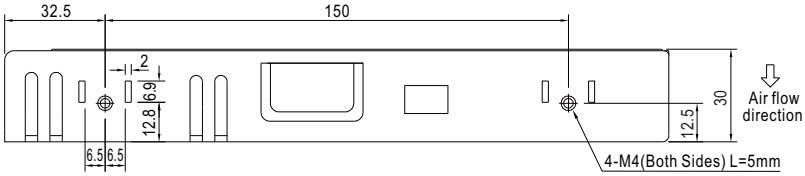

Terminal Pin No. Assignment :

Pin No.	Assignment	Pin No.	Assignment
1	AC/L	4~6	DC OUTPUT -V
2	AC/N	7~9	DC OUTPUT +V
3	FG ⏚		

■ Installation Manual

Please refer to : http://www.meanwell.com/webnet/search/InstallationSearch.html

Edal

SERIES B980

SILICON HIGH VOLTAGE ASSEMBLY BOARD

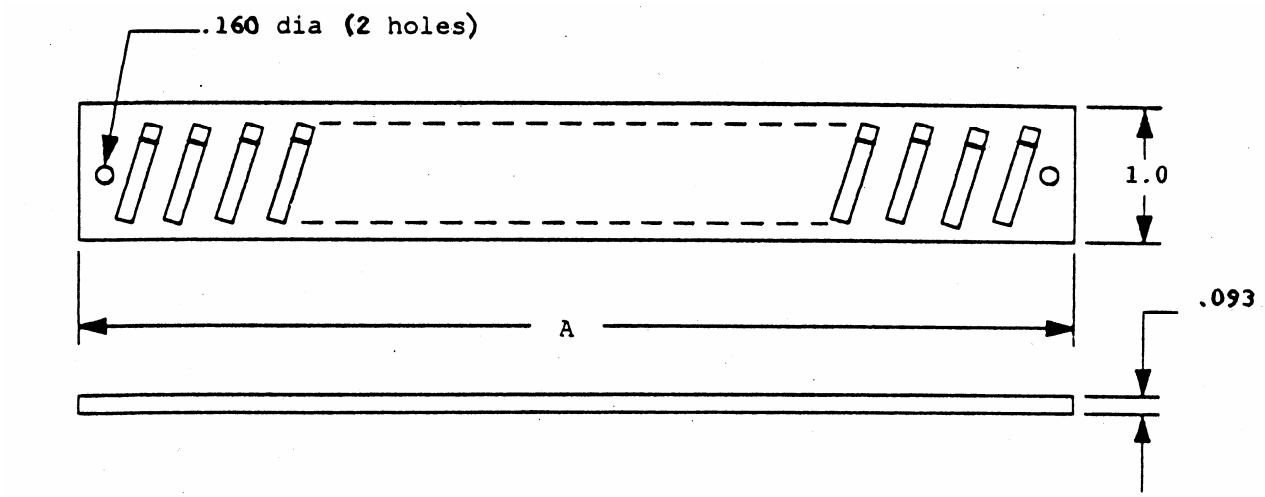

ELECTRICAL RATINGS

PART NUMBER	OPERATING PIV (kV)	TEST PIV (kV)	SINGLE CYCLE SURGE (AMPS)	AVG. RECTIFIED CURRENT **	MAX REVERSE CURRENT @ PIV	NUMBER OF DIODES PER BOARD	OVERALL LENGTH A
B980-100	100	125	25	220 mA	1 uA	16	6 1/16”
B980-125	125	150	25	220 mA	1 uA	19	6 1/6”
B980-150	150	175	25	220 mA	1 uA	22	6 1/6”

CENTER TO CENTER MOUNTING HOLE 5 ¾ “

** TESTED IN OIL @ 55° C

(203) 467-2591 TEL
(203) 469-5928 FAX
Email: Info@ edal.com
Internet:http://www.edal.com

EDAL industries, inc.
51 Commerce St. East Haven, CT 06512

Edal

SERIES B412

Miniature High Voltage Silicon Rectifiers

Smaller in size than other high voltage rectifiers, compact tubular construction and flexible leads facilitate circuit mounting and provide excellent thermal conductivity. These units are ideally suited for commercial and industrial applications including high voltage power supplies, electrostatic applications, cathode ray tubes, oscilloscopes, TV, display, X-ray and laser. Diodes used consist of double diffused junctions, bonded selected and pre-tested for uniform electrical characteristics. Compact, rugged, tubular construction eliminates sharp edges to reduce corona common to rectangular packages. Series B412 units meet moisture resistance requirements of MIL Standard 202A, Method 106. A varied operating range is available from 5,000 volts to 50,000 volts PIV, 5mA to 25mA and available in both standard and fast recovery series.

Electrical Ratings

Maximum Allowable One Cycle Surge Current (60 Hz single phase non-recurrent at rated PRV and no load)	4 amps
Maximum Reverse Current at PIV	
25 ^{o} C	1 ua*
100 ^{o} C	40 ua*

*fast recovery series 2 ua and 100 ua. Maximum reverse recovery time trr @ If =2 ma and Ir = 4 ma. Recovery to 1.0 ma – 250 nanoseconds

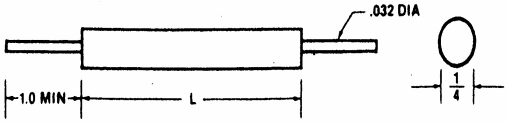

Standard Series / Fast Recovery Series

EDAL P/N* AVG. FWD CURRENT I_o AT 55°C			PIV VOLTS	MAX. FWD VOLTAGE DROP AT 25°C & I_o VOLTS	L IN.	EDAL P/N* AVG. FWD CURRENT I_o AT 55°C			PIV VOLTS	MAX. FWD VOLTAGE DROP AT 25°C & I_o VOLTS	L IN.
5 ma	10 ma	25ma				5 ma	10 ma	25 ma			
B412-5-5	B412-5-10	B412-5-25	5000	12	1.0	BR412-5-5	BR412-5-10	BR412-5-25	5000	15	1.0
B412-7-5	B412-7-10	B412-7-25	7000	12	1.0	BR412-7-5	BR412-7-10	BR412-7-25	7000	15	1.0
B412-10-5	B412-10-10	B412-10-25	10000	18	1.0	BR412-10-5	BR412-10-10	BR412-10-25	10000	30	1.0
B412-12-5	B412-12-10	B412-12-25	12000	18	1.0	BR412-12-5	BR412-12-10	BR412-12-25	12000	30	1.0
B412-15-5	B412-15-10	B412-15-25	15000	35	2.0	BR412-15-5	BR412-15-10	BR412-15-25	15000	60	2.0
B412-20-5	B412-20-10	B412-20-25	20000	35	2.0	BR412-20-5	BR412-20-10	BR412-20-25	20000	60	2.0
B412-25-5	B412-25-10	B412-25-25	25000	35	2.0	BR412-25-5	BR412-25-10	BR412-25-25	25000	60	2.0
B412-30-5	B412-30-10	B412-30-25	30000	50	3.0	BR412-30-5	BR412-30-10	BR412-30-25	30000	90	3.0
B412-40-5	B412-40-10	B412-40-25	40000	50	3.0	BR412-40-5	BR412-40-10	BR412-40-25	40000	90	3.0
B412-50-5	B412-50-10	B412-50-25	50000	70	5.0	BR412-50-5	BR412-50-10	BR412-50-25	50000	120	5.0

* Standard product lines are also available in 50 ma and 100 ma ratings. Other values are available upon request.

(203) 467-2591 TEL
(203) 469-5928 FAX
Email: Info@edal.com
Internet:http://www.edal.com

EDAL industries, inc.
51 Commerce St. East Haven, CT 06512

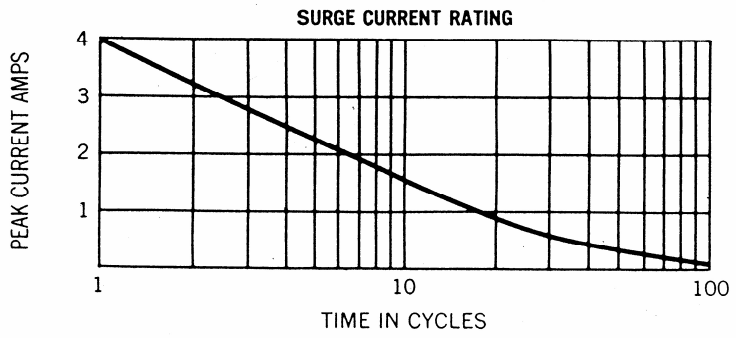

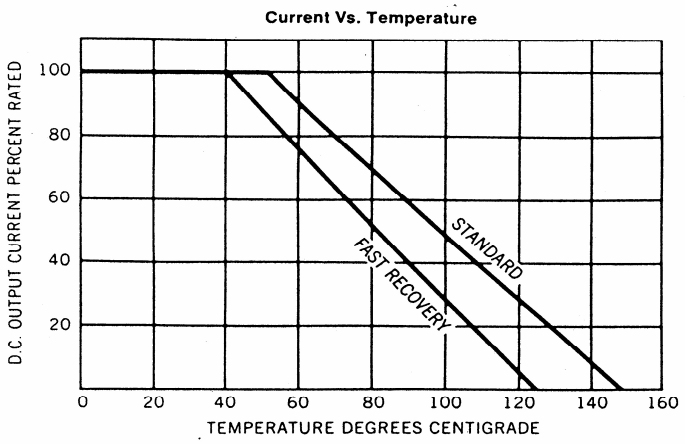

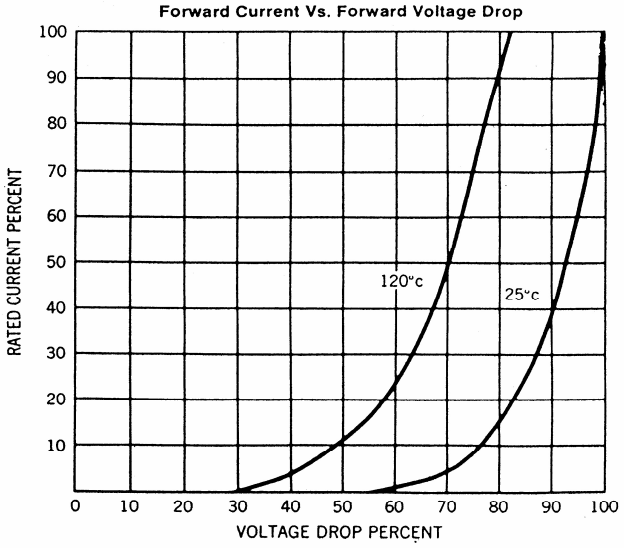

(203) 467-2591 TEL
(203) 469-5928 FAX
Email: Info@edal.com
Internet:http://www.edal.com

EDAL industries, inc.
51 Commerce St. East Haven, CT 06512

SLM 300W-1200W HIGH VOLTAGE MODULE

SPELLMAN HIGH VOLTAGE ELECTRONICS CORPORATION

- ***Compact & Lightweight***
- ***Models from 1kV-70kV, 300W, 600W AND 1200W***
- ***Universal Input, Power Factor Corrected***
- ***Low Cost Modular Design***
- ***Standard Digital Interfaces: USB, Ethernet and RS-232***
- ***CE Compliant, UL Recognized***

www.spellmanhv.com/manuals/SLM

Spellman's SLM Series of high voltage modules are designed for OEM applications up to 70kV at 1200 watts. Its universal input, small package size and choice of three standard digital interfaces simplifies integrating the SLM into your system design. Models are available in either positive or negative polarity. The SLM is fully arc and short protected. Excellent regulation specifications are provided along with outstanding stability performance.

TYPICAL APPLICATIONS

Capacitor Charging
HiPot Testing
CRT Testing
Electrostatics
E Beam Systems
CW Lasers

FIRMWARE CONFIGURATIONS

STANDARD BASED FEATURES

AOL	Adjustable Overload Trip
AT	Arc Trip
NAD	No Arc Detect
NSS	No Slow Start
PSS	Programmable Slow Start
RFR	Remote Fault Reset
RMI	Remote Mode Indicators
ROV	Remote Overvoltage Adjust

SPECIFICATIONS

Input Voltage:
Power factor corrected input, ≥0.98
90-264Vac, 47-63 Hertz, for 300 watt units
180-264Vac, 47-63 Hertz for 600 and 1200 watt units

Output Voltage:
11 models—1kV to 70kV

Output Polarity:
Negative or positive, specify at time of order

Local Indicators:
Arc, HV On, Temp Error, OVP, I Mode
Power On, OC, Reg Error

Power:
3 power ranges available—300, 600 and 1200 watts.
Other power levels available on special order.

Voltage Regulation:
≤0.01% of rated output voltage over specified input voltage range
≤0.01% of rated output voltage for a full load change

Current Regulation:
≤0.01% of rated output current over specified input voltage range
≤0.01% of rated output current for a ±100µA for a full voltage change

Ripple:
≤0.2% rms of maximum rated voltage, measured with a 10 foot long HV cable

Stability:
≤50ppm/hr after a 2 hour warm up

Temperature Coefficient:
≤100ppm per degree C

Environmental:
Temperature Range:
Operating: 0˚C to 40˚C
Storage: -40˚C to 85˚C
Humidity:
20% to 85% RH, non-condensing.

Control Interface

Local Interface:
Potentiometers are provided to adjust voltage and current.

Remote Interface: USB, Ethernet and RS-232 are standard, implemented with 12 bits of resolution.
All digital monitors have an accuracy specification of 2%.

Control Software: A VB GUI will be provided for RS-232/USB, the Ethernet interface will have an embedded applet for control.

HV Control Enable/Interlock:
A dry contact, hardware based interlock is provided for remote mode. In local mode this I/O is the enable.

Monitor Signals:
Voltage and current monitor signals are scaled 0-10Vdc equals 0-100% of full scale, accuracy is 1%.

Cooling:
Forced air

Dimensions:
300/600 watts:
4.75˝H X 6˝W X 12˝D (120.65mm x 152.4mm x 304.8mm)
1200 watts:
4.75˝H X 12˝W X 12˝D (120.65mm x 304.8mm x 304.8mm)

Weight:
300/600 watts: 14 pounds (6.35kg)
1200 watts: 26 pounds (11.8kg)

Spellman High Voltage Electronics Corporation
Corporate Headquarters
Hauppauge, New York USA
+1-631-630-3000 FAX: +1-631-435-1620
e-mail: sales@spellmanhv.com
www.spellmanhv.com

128035-001 REV. P

Input Line Connector:
IEC320 cord set with integrated EMI filter

Output Cable:
A detachable 10' (3.3m) long shielded HV cable is provided

Regulatory Approvals:
Compliant to 204/108/EC, the EMC Directive and 2006/95/EC, the Low Voltage Directive. UL/CUL recognized, File 227588. RoHS compliant.

SLM SELECTION TABLE- 300W

300 Watt		
kV	mA	Model
1	300	SLM1*300
3	100	SLM3*300
5	60	SLM5*300
10	30	SLM10*300
15	20	SLM15*300
20	15	SLM20*300
30	10	SLM30*300
40	7.5	SLM40*300
50	6	SLM50*300
60	5	SLM60*300
70	4.28	SLM70*300

*Specify "P" for positive polarity or "N" for negative polarity

SLM SELECTION TABLE- 600W

600 Watt		
kV	mA	Model
1	600	SLM1*600
3	200	SLM3*600
5	120	SLM5*600
10	60	SLM10*600
15	40	SLM15*600
20	30	SLM20*600
30	20	SLM30*600
40	15	SLM40*600
50	12	SLM50*600
60	10	SLM60*600
70	8.56	SLM70*600

*Specify "P" for positive polarity or "N" for negative polarity

SLM SELECTION TABLE- 1200W

1200 Watt		
kV	mA	Model
1	1200	SLM1*1200
3	400	SLM3*1200
5	240	SLM5*1200
10	120	SLM10*1200
15	80	SLM15*1200
20	60	SLM20*1200
30	40	SLM30*1200
40	30	SLM40*1200
50	24	SLM50*1200
60	20	SLM60*1200
70	17.14	SLM70*1200

*Specify "P" for positive polarity or "N" for negative polarity

SLM ANALOG INTERFACE— J2 15 PIN MALE D CONNECTOR

PIN	SIGNAL	SIGNAL PARAMETERS
1	Power Supply Fault	Open Collector, 35V @ 10mA Maximum
2	Current Program In	0 to 10V=0 to 100% Rated Output, Zin=10MΩ
3	Voltage Program In	0 to 10V=0 to 100% Rated Output, Zin=10MΩ
4	NC	No Connection
5	Local Voltage Prog.	Multi-turn front panel potentiometer
6	NC	No Connection
7	Local Current Prog.	Multi-turn front panel potentiometer
8	Voltage Monitor	0 to 10V=0 to 100% Rated Output, Zout =4.99k, 1%
9	Signal Ground	Ground
10	Current Monitor	0 to 10V=0 to 100% Rated Output, Zout =4.99k, 1%
11	HV Enable Input	Connect to Pin 12 to HV Enable Supply
12	HV Enable Output	+15V @ Open, ≤15mA @ Closed
13	NC	No Connection
14	HV On Output Signal	Open Collector, 35V @10mA Maximum
15	Spare	No Connection

RS-232 DIGITAL INTERFACE— J3 9 PIN FEMALE D CONNECTOR

PIN	SIGNAL	SIGNAL PARAMETERS
1	NC	No Connection
2	TX out	Transmit Data
3	RX in	Receive Data
4	NC	No Connection
5	SGND	Ground
6	NC	No Connection
7	NC	No Connection
8	NC	No Connection
9	NC	No Connection

USB DIGITAL INTERFACE— J4 4 PIN USB "B" CONNECTOR

PIN	SIGNAL	SIGNAL PARAMETERS
1	VBUS	+5 Vdc
2	D-	Data -
3	D+	Data +
4	GND	Ground

ETHERNET DIGITAL INTERFACE— J5 8 PIN RJ45 CONNECTOR

PIN	SIGNAL	SIGNAL PARAMETERS
1	TX+	Transmit Data +
2	TX-	Transmit Data -
3	RX+	Receive Data +
4	NC	No Connection
5	NC	No Connection
6	RX-	Receive Data -
7	NC	No Connection
8	NC	No Connection

Spellman High Voltage Electronics Corporation
Corporate Headquarters
Hauppauge, New York USA
+1-631-630-3000 FAX: +1-631-435-1620
e-mail: sales@spellmanhv.com
www.spellmanhv.com
128035-001 REV. P
Spellman High Voltage is an ISO 9001:2008 and ISO 14001:2004 registered company

DIMENSIONS: in.[mm]

300/600 Watt

BOTTOM VIEW

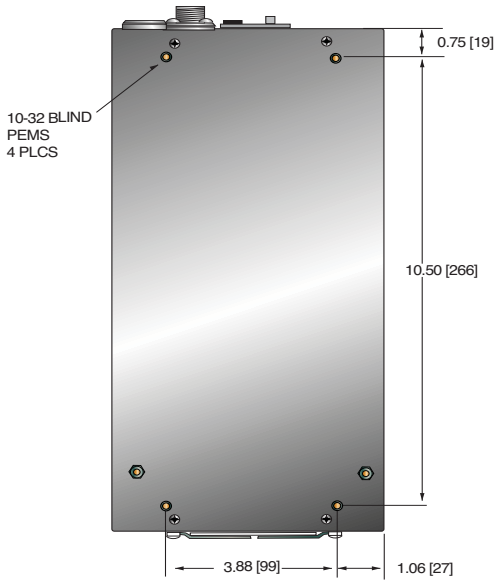

FRONT VIEW

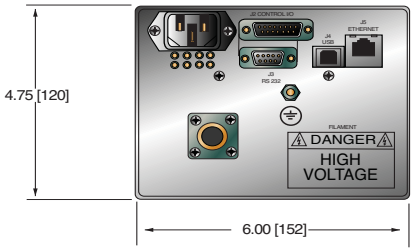

SIDE VIEW

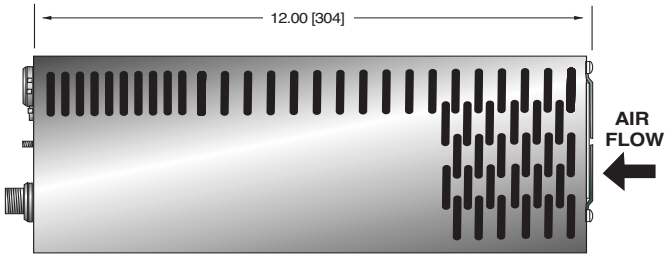

1200 Watt

BOTTOM VIEW

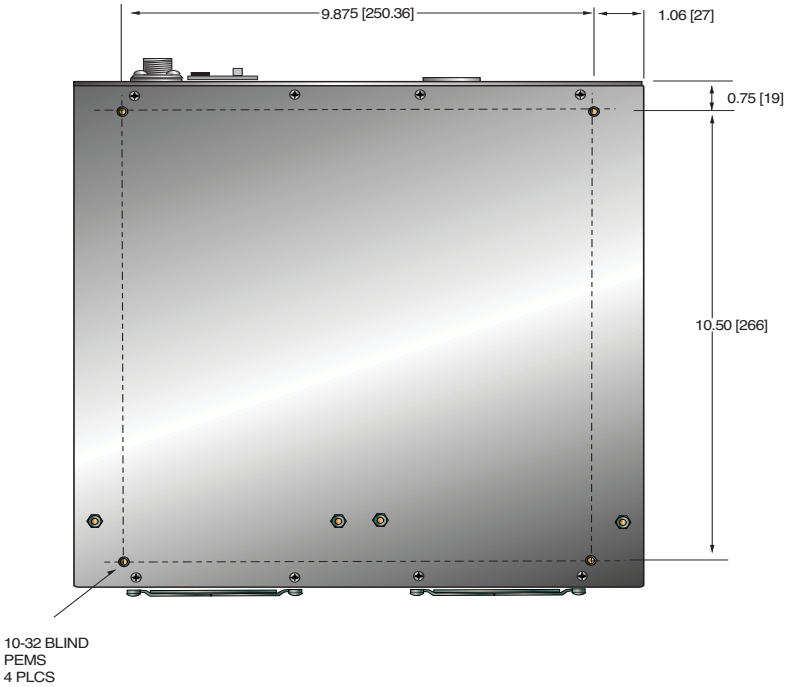

FRONT VIEW

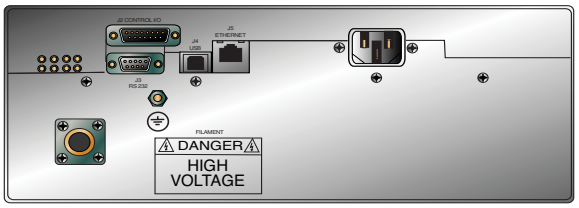

SIDE VIEW

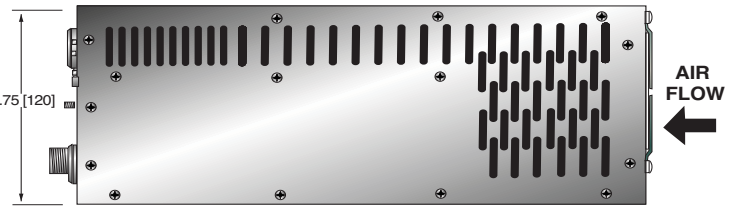

Instruction Manual

SLM SERIES

High Voltage Power Supply

MODEL :
SERIAL# :
DATE :

SPELLMAN
HIGH VOLTAGE ELECTRONICS CORPORATION
475 Wireless Blvd.
Hauppauge, New York, 11788

+1(631) 630-3000*FAX: +1(631) 435-1620*
E-mail: **sales@spellmanhv.com**
Website: www.spellmanhv.com

IMPORTANT SAFETY PRECAUTIONS

SAFETY

THIS POWER SUPPLY GENERATES VOLTAGES THAT ARE DANGEROUS AND MAY BE FATAL. OBSERVE EXTREME CAUTION WHEN WORKING WITH THIS EQUIPMENT.

High voltage power supplies must always be grounded.

Do not touch connections unless the equipment is off and the Capacitance of both the load and power supply is discharged.

Allow five minutes for discharge of internal capacitance of the power supply.

Do not ground yourself or work under wet or damp conditions.

SERVICING SAFETY

Maintenance may require removing the instrument cover with the power on.

Servicing should be done by qualified personnel aware of the electrical hazards.

WARNING note in the text call attention to hazards in operation of these units that could lead to possible injury or death.

CAUTION notes in the text indicate procedures to be followed to avoid possible damage to equipment.

WICHTIGE SICHERHEITSHINWEISE

SICHERHEIT

DIESES HOCHSPANNUNGSNETZTEIL ERZEUGT LEBENSGEFÄHRLICHE HOCHSPANNUNG.
SEIN SIE SEHR VORSICHTIG BEI DER ARBEIT MIT DIESEM GERÄT.

Das Hochspannungsnetzteil muß immer geerdet sein.

Berühren Sie die Stecker des Netzteiles nur, wenn das Gerät ausgeschaltet ist und die elektrischen Kapazitäten des Netzteiles und der angeschlossenen Last entladen sind.

Die internen Kapazitäten des Hochspannungsnetzteiles benötigen ca. 5 Minuten, um sich zu entladen.

Erden Sie sich nicht, und arbeiten Sie nicht in feuchter oder nasser Umgebung.

SERVICESICHERHEIT

Notwendige Reparaturen können es erforderlich machen, den Gehäusedeckel während des Betriebes zu entfernen.

Reparaturen dürfen nur von qualifiziertem, eingewiesenem Personal ausgeführt werden.

“WARNING” im folgenden Text weist auf gefährliche Operationen hin, die zu Verletzungen oder zum Tod führen können.

“CAUTION” im folgenden Text weist auf Prozeduren hin, die genauestens befolgt werden müssen, um eventuelle Beschädigungen des Gerätes zu vermeiden.

PRECAUTIONS IMPORTANTES POUR VOTRE SECURITE

CONSIGNES DE SÉCURITÉ

CETTE ALIMENTATION GÉNÈRE DES TENSIONS QUI SONT DANGEUREUSES ET PEUVENT ÊTRE FATALES.
SOYEZ EXTRÊMENT VIGILANTS LORSQUE VOUS UTILISEZ CET ÉQUIPEMENT.

Les alimentations haute tension doivent toujours être mises à la masse.

Ne touchez pas les connectiques sans que l'équipement soit éteint et que la capacité à la fois de la charge et de l'alimentation soient déchargées.

Prévoyez 5 minutes pour la décharge de la capacité interne de l'alimentation.

Ne vous mettez pas à la masse, ou ne travaillez pas sous conditions mouillées ou humides.

CONSIGNES DE SÉCURITÉ EN CAS DE REPARATION

La maintenance peut nécessiter l'enlèvement du couvercle lorsque l'alimentation est encore allumée.

Les réparations doivent être effectuées par une personne qualifiée et connaissant les risques électriques.

Dans le manuel, les notes marquées « **WARNING** » attire l'attention sur les risques lors de la manipulation de ces équipements, qui peuvent entrainer de possibles blessures voire la mort.

Dans le manuel, les notes marquées « **CAUTION** » indiquent les procédures qui doivent être suivies afin d'éviter d'éventuels dommages sur l'équipement.

IMPORTANTI PRECAUZIONI DI SICUREZZA

SICUREZZA

QUESTO ALIMENTATORE GENERA TENSIONI CHE SONO PERICOLOSE E POTREBBERO ESSERE MORTALI.
PONI ESTREMA CAUTELA QUANDO OPERI CON QUESO APPARECCHIO.

Gli alimentatori ad alta tensione devono sempre essere collegati ad un impianto di terra.

Non toccare le connessioni a meno che l'apparecchio sia stato spento e la capacità interna del carico e dell'alimentatore stesso siano scariche.

Attendere cinque minuti per permettere la scarica della capacità interna dell'alimentatore ad alta tensione.

Non mettere a terra il proprio corpo oppure operare in ambienti bagnati o saturi d'umidità.

SICUREZZA NELLA MANUTENZIONE.

Manutenzione potrebbe essere richiesta, rimuovendo la copertura con apparecchio acceso.

La manutenzione deve essere svolta da personale qualificato, coscio dei rischi elettrici.

Attenzione alle **AVVERTENZE** contenute nel manuale, che richiamano all'attenzione ai rischi quando si opera con tali unità e che potrebbero causare possibili ferite o morte.

Le note di **CAUTELA** contenute nel manuale, indicano le procedure da seguire per evitare possibili danni all'apparecchio.

Table of Contents

Chapter 1

INTRODUCTION

1.1 Description of the SLM Series

The SLM Series of high voltage generator modules are designed for OEM applications up to 70kV and up to 1200watts. Its universal input, small package size and choice of three standard digital interfaces simplifies integrating the SLM into your system. DSP based control circuitry provides excellent regulation, along with outstanding stability performance. User programmable firmware option makes the operation of the SLM flexible.

The dramatically reduced size of the SLM module, compared to traditional high voltage modules, is obtained by a state of the art off-line resonant converter. The resonant converter utilizes a unique control scheme, which allows constant frequency operation while maintaining high efficiency. The high efficiency is obtained by zero current switching (ZCS) resonant control. High operating frequency, typically 50 kHz, allows for low ripple and excellent dynamic response capabilities.

The DC output voltage and current are controllable over the full range of operation. Monitoring and control signals are provided for simple, yet flexible control of the power supply. The SLM series operates from 90 - 265Vac, at 50/60 Hz single phase for the 300Watt models and 180–264Vac, at 50/60 Hz single phase for the 600Watt and 1200Watt models. The input is power factor corrected and the SLM series operates at full power continuous. The ambient temperature must be kept below the maximum rating as specified in 1.2. The standard warranty applies to the modules. Consult factory about the warranty for custom SLM modules.

1.2 SLM Specifications

- **Input Voltage:**

  90-264Vac 47-63Hz, for 300watt models

  180-264Vac 47-63Hz, for 600watt models

  180-264Vac 47-63Hz, for 1200watt models

- **Power Factor:**

  FL: ≥ 0.99

- **Output Voltage:**

  22 models: 1kv to 70kv

- **Voltage Regulation:**

  ≤ 0.01% of rated output voltage over specified input voltage range
  ≤ 0.01% of rated output voltage for a full load change

- **Current Regulation:**

  ≤ 0.01% of rated output current over specified input voltage range
  ≤ 0.01% of rated output current for a ±100µA for a full voltage change

- **Ripple**: ≤ 0.2% rms of maximum rated voltage, measured with a 10 foot long HV cable

- **Polarity:** Positive or Negative polarity with respect to ground. (Specify at time of ordering).

- **Stability:** ≤ 50ppm/hr after a 2 hour warm up

- **Temperature Coefficient**: ≤ 100ppm / °C.

- **Temperature:**

  Operating: 0°C to 40°C
  Storage: -40°C to +85°
  Humidity: 20% to 85% RH, non-condensing.

Control Interface

- **Local Interface:** Voltage and current are externally programmable over the entire range from zero to maximum rating via 0-10VDC input.

- **+10Vdc Reference:** A +10Vdc reference is provided for local programming via two potentiometers to be used to adjust voltage and current.

- **Remote Interface:** USB, Ethernet and RS232 are standard, implemented with 12 bits of resolution. All digital monitors have an accuracy specification of 2%.

- **Control Software:** A VB GUI will be provided for RS-232/USB, the Ethernet interface will have an embedded applet for control.

- **Monitor Signals:**
  Voltage and current monitor signals are scaled 0-10Vdc equals 0-100% of full scale. Accuracy is 1%.

- **HV Control Enable/Interlock:**
  A dry contact, hardware based interlock is provided for remote mode. In local mode this I/O is the enable.

IMPORTANT

This control signal in not a safety interlock and should not be used for protection from high voltage generation for safety purposes.

- **Cooling:**
  Forced air
- **Dimensions:**
  4.75″ H X 6″ W X 12″ D (120.65mm x 152.4mm x 304.8mm)
- **Weight:**
  14 pounds (5.44kg)
- **Input Line Connector:**
  IEC320 cord set with integrated EMI filter
- **Output Cable:**
  A detachable 10’ (3.3m) long shielded HV cable is provided

1.3 Standard Features

The SLM series incorporates several standard features designed to optimize user operation.

Standard Firmware Configurable Features:

Slow Start:
Provides a gradual increase in high voltage output until the maximum set point is reached. This ramp time can be configured in the firmware from 0.1 seconds to 60 seconds, and is stored internally in the SLM memory. The factory default setting is 5 seconds.

Adjustable Overload Trip: AOL
The overload trip protection feature shuts down the high voltage output when the current exceeds the limit set by the current control. The DSP inhibits the generation of high voltage and reverts the unit to HV OFF mode, illuminating the OVER CURRENT indicator. This can be enabled in the firmware and is stored internally in the SLM memory. When AOL is disabled the default overcurrent trip point is 110% of full-scaled output. The factory default setting for AOL is disabled.

Remote Overvoltage Adjust: ROV
The overvoltage trip protection feature shuts down the high voltage output when the voltage exceeds the limit configured in the firmware. The DSP inhibits the generation of high voltage and reverts the unit to HV OFF mode, illuminating the OVER VOLTAGE indicator. This can be enabled in the firmware and is adjustable from 0% to 110% of full-scaled output voltage. The select values are stored internally in the SLM memory. When ROV is disabled the default overvoltage trip point is 110% of full-scaled output. The factory default setting for ROV is disabled.

ARC Trip: AT

The SLM provides firmware configurable arc detection. The user can set the arc detection parameters to custom fit their requirements. The follow parameters are programmable in the firmware and are stored internally in the SLM memory:

Arc Count:
This sets how many arc’s are require within the selected time period to cause an arc shutdown. It is programmable from 1 arc to 20 arc. The factory default setting is 8 arc.

Time Period:
This sets the time period that the selected arc count must occur within to cause an arc shutdown .It is programmable from 1 second to 60 seconds. The factory default setting is 20 seconds.

Quench Time:
This sets the length of time that the high voltage is shutdown to quench the arc after an arc occurs. It is programmable from 100ms to 500ms. The factory default setting is 500ms.

Re-Ramp:
After an arc occurs, the kV output will slow start at the programmed ramp time. If Re-ramp is disabled then there will be no ramping after an arc. The factory default setting is enabled.

The SLM will not accept Arc Count and Time Period setting that exceed 1 arc per second.

No Arc Detect: NAD
When No Arc Detect mode (NAD) is enabled, the HVPS has no arc shutdown protection. The HVPS is designed to handle an arc rate of 1 arc per second. **Exceeding 1 arc per second could cause damage to the HVPS. HVPS failure caused by excessive arc will not be covered under the warranty**. The factory default setting for NAD is disabled.

Watchdog Timer
If there is no communication between the HVPS and the host computer for more than 10 seconds the HV output will shutdown and the Watchdog Timer fault will be sent via the digital communication when and if communication is resumed. This can be enabled via the digital communication and is defaulted to disable upon power up.

Standard Input Features:

Power Factor and Universal Input: The input voltage of the SLM can operate within the range from 90Vac to 265Vac for the 300Watt model and at 180–264Vac, for the 600Watt model. The power factor is actively corrected across this entire range and is better than 0.99 at full load.

Internal EMI Filter and Fuse Protection: An internal EMI filter and fuse provide protection against line voltage surges and power supply faults.

Remote Operating Features

Remote Control: USB, Ethernet and RS232 are standard. A provided G.U.I allow user to control the unit via RS232 and USB interfaces. An imbedded Applet web browser allow user to control the unit via Ethernet. Refer to SLM digital protocol spec for details.

Remote Monitor: Allows remote monitoring of the Output voltage, current, HV On clock counter, and user configurable firmware features via the USB, Ethernet or RS232.

Remote Programming: Allows remote programming of the output voltage, current and user configurable firmware features via the USB, Ethernet or RS232.

HV Enable/Interlock: In local mode, allows remote ON/OFF control of the high voltage. In remote mode, the hardware based dry contact closure must be closed in order to enable the high voltage via the USB, Ethernet or RS232.

1.4 System Status and Fault Diagnostic Display

If a fault occurs, the power supply will revert to the Shutdown mode indicated by extinguishing of HV ON LED and via RS-232 as HV OFF. To reset a fault in local mode the enable must be reset. To reset a fault in remote mode a HV ON or a RESET FAULTS command must be sent via the RS-232, USB or Ethernet.

- **OVER CURRENT FAULT:** Indicates the over current protection circuitry has caused the high voltage to turn off. This fault will occur if the output current exceeds 110% of full scale. If AOL is enable this fault will occur when the current exceeds the current program set point. This fault is indicated by illumination of over current LED status on the front panel and via RS-232, USB or Ethernet as Over Current.
- **OVERVOLTAGE:** Indicates the over voltage protection circuitry has caused the high voltage to turn off. This fault will occur if the output voltage exceeds 110% of full scale. If ROV is enable this fault will occur when the voltage exceeds the programmed ROV setpoint. This fault is indicated by over voltage LED status on the front panel and via the RS-232, USB or Ethernet as Over Voltage.
- **ARC FAULT**: Indicates that the programmed arc count was exceeded within programmed time period. This fault is indicated by steady state illumination of Arc Fault LED status on front panel and via RS-232, USB or Ethernet as Arc Fault. The LED will pulse for each arc, but will be a steady state ON if a shutdown occurs.
- **REGULATION ERROR:** Indicates a failure in the voltage, current or power regulation circuitry. This fault usually occurs when there is a lack of output power to maintain regulation. This fault is indicated by illumination of the Regulation Error LED status on front panel and via RS-232, USB or Ethernet as Under Current.
- **OVER TEMPERATURE:** Indicates either a failure in the cooling system that would cause the internal heat sink temperature to exceed the operating range or the ambient temperature to exceed 40 degrees C, resulting in shutdown of HV. This fault is indicated by Over Temperature LED status on the front panel and via RS-232, USB or Ethernet as Over Temperature.
- **PS Fault Indication:** PS Faults an open collector output with a 1k ohm impedance on J2-1, indicates that a faults has occurred. High = no faults
- **HV On Indication:** HV On Signal is an open collector output with a 1k ohm impedance on J2-14, indicates that HV is enabled. High = HV OFF
- **HV On LED:** When the high voltage status is “On” state it is indicated by HV ON LED status on the front panel.

- **Power On LED:** When the input power is applied to the unit it is indicated by PWR ON LED status on the front panel.
- **I MODE:** Indicates the output current regulator circuit is maintaining current regulation. This is indicated by I Mode LED status on the front panel and via RS-232, USB or Ethernet as I Mode.

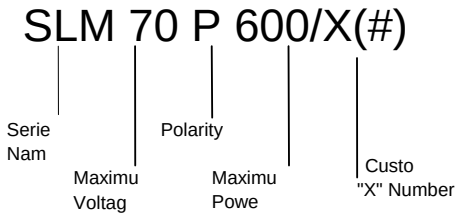

1.5 Interpreting the Model Number:

The model number of the power supply describes its capabilities. After the series name is:

(1) The maximum voltage in kilovolts.
(2) The polarity of the output – positive (P), or negative (N).
(3) The maximum output in watts.
(4) Custom "X" number representing details listed in a separate specification control drawing.

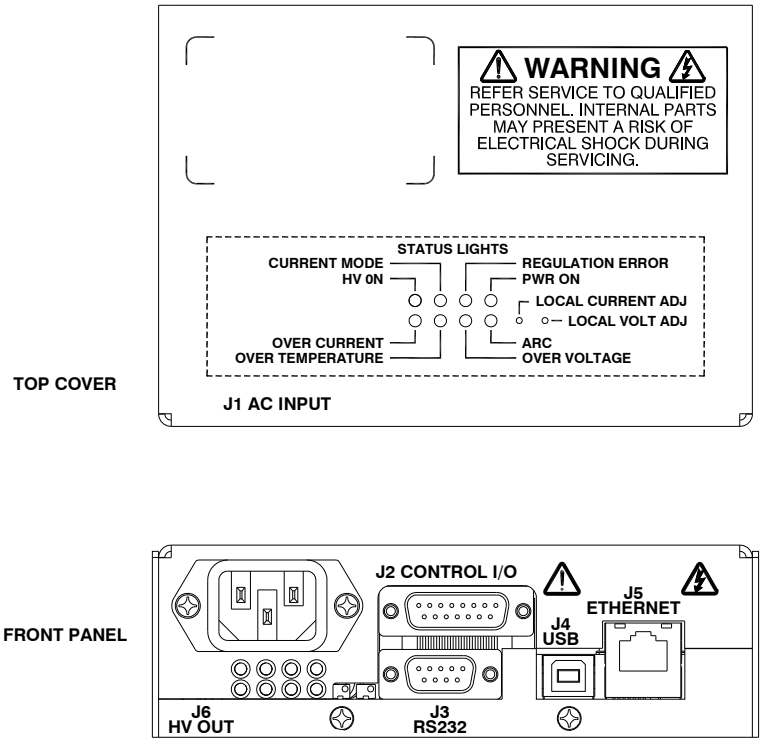

Figure 1.1 LED Legend and Connector Assignment (shown 300W and 600W)

Chapter 2

INSPECTION AND INSTALLATION

Initial inspection and preliminary checkout procedures are recommended. For safe operation, please follow the step-by-step procedures described in Chapter 3, Operating Instructions.

2.1 Initial Inspection

Inspect the package exterior for evidence of damage due to handling in transit. Notify the carrier and Spellman immediately if damage is evident. Do not destroy or remove any of the packing material used in a damaged shipment. After unpacking, inspect the panel and chassis for visible damage.

Fill out and mail the Warranty Registration card accompanying the unit. Standard SLM high voltage power supplies and components are covered by warranty. Custom and special order models (with an X suffix in the model number) are also covered by warranty.

2.2 Mechanical Installation

The SLM series module power supplies are designed for installation into existing or newly developed OEM equipment. The power supply can also easily fit into bench top applications or test set requirements. Standard unit dimensions are shown in Figure 2.1

For custom mounting requirements or specific package size requirements consult Spellman's Sales Department. Spellman has many package designs available, or can design a specific enclosure for your requirements.

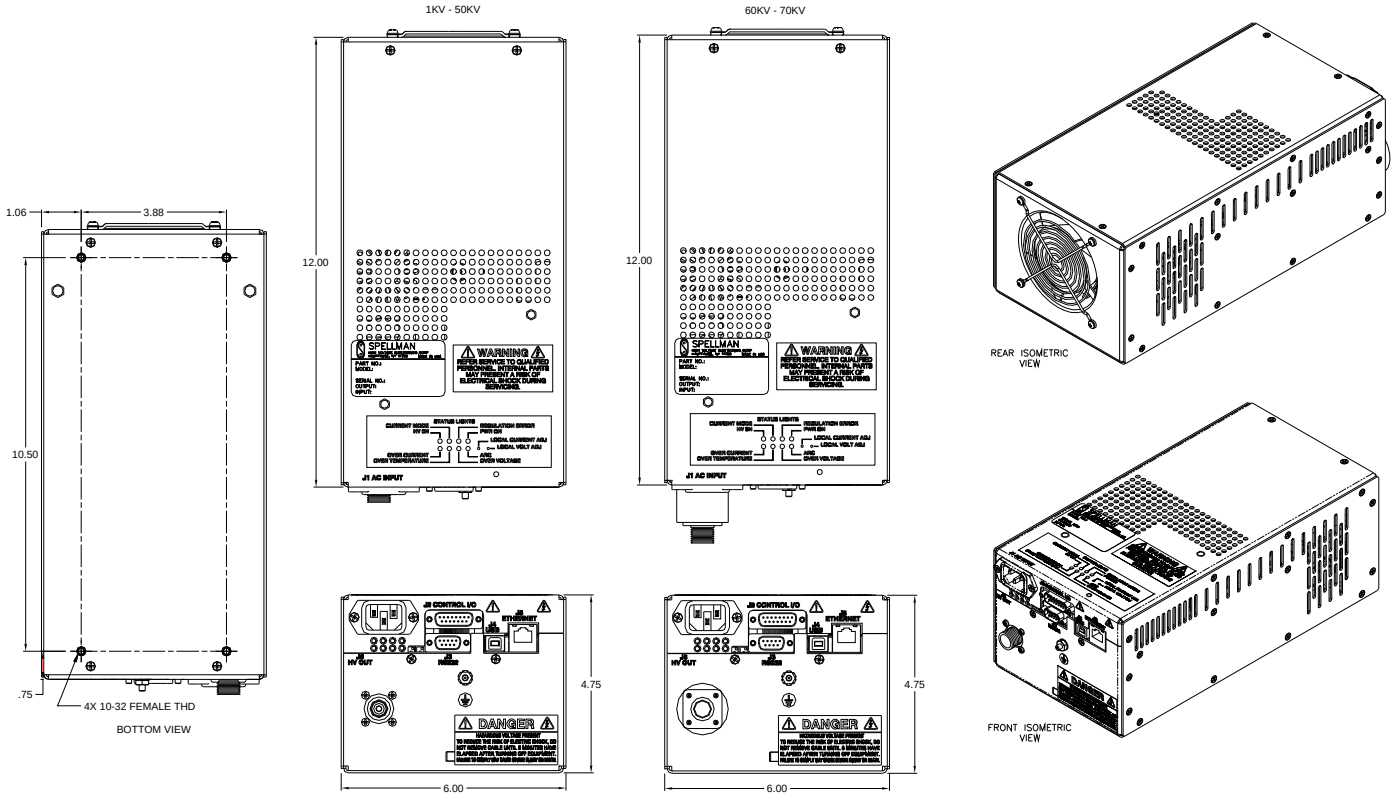

Figure 2.1 Unit Dimensions (300W and 600W)

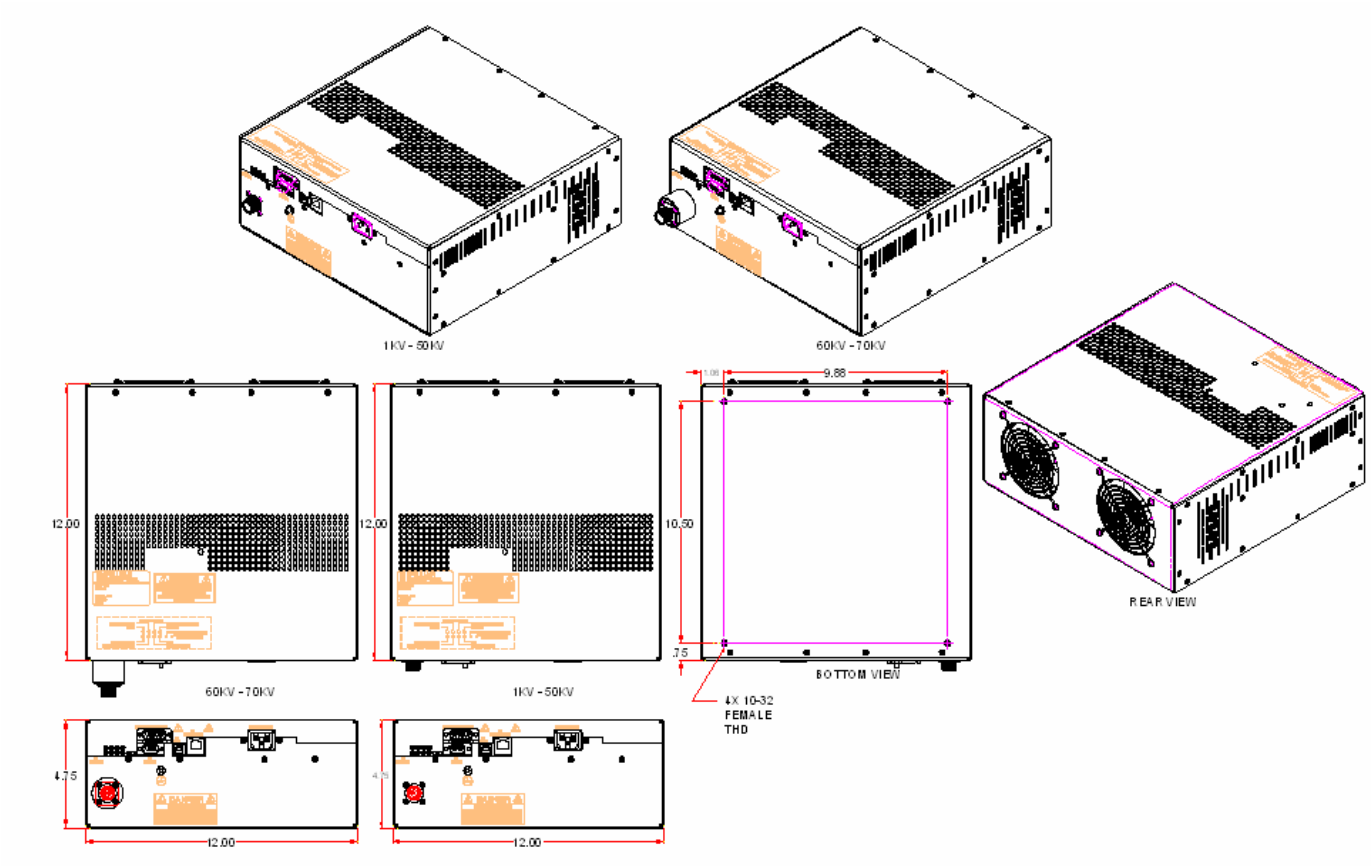

Figure 2.2 Unit Dimensions (1200W)

Chapter 3

OPERATING INSTRUCTIONS

3.1 Operation

WARNING

THIS EQUIPMENT GENERATES DANGEROUS VOLTAGES THAT MAY BE FATAL. PROPER GROUNDING OF ALL HIGH VOLTAGE EQUIPMENT IS ESSENTIAL.

IMPORTANT:

Before connecting the power supply to the AC line, follow this step-by-step procedure.

Do not connect the power supply to the AC line until Step F is reached.

Failure to follow these procedures may void the warranty.

A) Insure that the high voltage cable is properly installed and terminated to the load. Insure that all circuits connected to the high voltage output are safely interlocked against accidental contact. Insure external load is discharged.

B) Check the input voltage rating on the serial nameplate of the supply and make certain that this is the rating of the available power source

C) **PROPER GROUNDING TECHNIQUE:** The chassis of high voltage power supplies must be grounded, preferably to a water system ground using copper pipe or other earth ground. A ground stud is provided on the front panel. See Figure 3.1 for a typical operating setup. The return line from the load should be connected to the power supply chassis. Using a separate external ground at the load is not recommended. An IEC 320 connector is provided for connection to the line voltage source. A standard line cord is also provided.

D) **Hook-up:** Connect control and monitoring connections as described in this manual.

E) For initial turn-on, program the voltage and current for zero output. Connect the enable/disable signal to disable.

F) The input power cable may now be connected to the AC power line.

G) Enable the power supply via the enable/disable hardware based, dry contact closure.

H) Slowly program the output voltage and current to desired level. Monitor the output voltage and current via the monitoring test points. Note equipment operation is normal, i.e. load is behaving as predicted.

I) To turn high voltage off, use the enable/disable signal. If equipment is to be kept off for extended periods, disconnect power supply from line voltage source.

WARNING

AFTER TURNOFF, DO NOT HANDLE THE LOAD UNTIL THE CAPACITANCE HAS BEEN DISCHARGED!
LOAD CAPACITANCE MAY BE DISCHARGED BY SHORTING TO GROUND.

WARNING

THE VOLTAGE MONITOR ON THE POWER SUPPLY FRONT PANEL DOES NOT READ THE OUTPUT VOLTAGE WHEN THE POWER IS TURNED OFF, EVEN IF A CHARGE STILL EXISTS ON THE LOAD.

CAUTION

ALWAYS OPERATE THE UNIT WITH THE COVER ON. DO NOT ATTEMPT TO ACCESS OR REPAIR ANY INTERNAL CIRCUITS. DANGEROUS AND LETHAL VOLTAGES ARE GENERATED INSIDE THE MODULE.

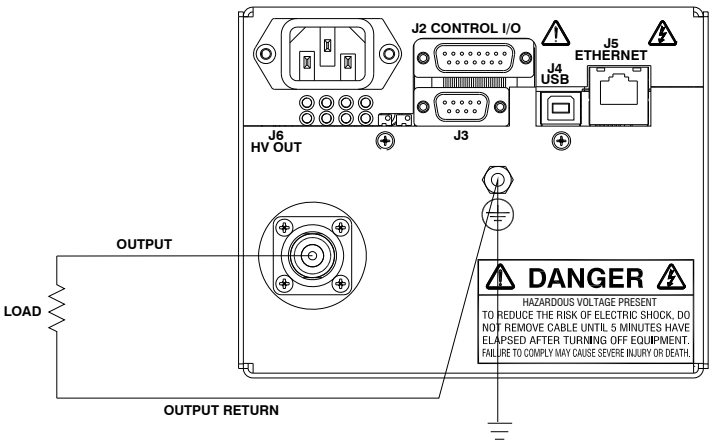

Figure 3.1 Proper Grounding Technique

3.2 Standard Features

A note on remote interface circuitry and remote signal grounding: whenever possible, electrical isolation should be provided when interfacing with any high voltage power supply. For enable/disable signal connections, an isolated relay or optocoupler should be used. For PS Fault indication an optocoupler should be used. If possible, analog programming and monitoring signals should be isolated via analog isolation amplifiers. Spellman application engineers are available to assist in interface circuitry design. All interface cables should be properly shielded. All power supply signals should be referenced to the power supplies signal ground or power supply chassis ground

Local Programming potentiometers: The voltage and current controls on the front panel can be used as follows: For local current control, jump J2-2 to J2-7. For local voltage control, jump J2-3 to J2-5. See Figure 3.2.

LOCAL PROGRAMMING: Allows local adjustment of the output voltage and current level via an external voltage source. 0-10Vdc signal is supplied to pin 3 of the J2 for voltage programming and 0-10 Vdc signal is supplied to Pin 2 J2 for current programming. Programming signals should be referenced to Pin 9 of J2, signal ground. By adjusting the voltage source from 0 volts (zero output) to 10 Vdc (full rated output) the desired output can be selected. See Figure 3.3 for wiring diagram and specifications.

Local Monitoring: Monitor outputs are made available for monitoring the voltage and current output. The monitor outputs are always positive regardless of the output polarity, where zero 0 to 10 Vdc equals 0-100% of output. See Figure 3.4 for monitoring wiring and see data sheet for pin outs.

HV Enable/Interlock: In Local Mode allows ON/OFF control of the high voltage. The hardware based dry contact closure must be closed in to enable the high voltage. In Remote Mode this I/O acts as an Interlock. The hardware based dry contact closure must be closed in order to enable the high voltage via the USB, Ethernet or RS232. This can be done by connecting pins 11 and 12 on J2. See Figure 3.5.

REMOTE PROGRAMMING:

After establishing communication with the UUT as per the SLM Digital Protocol spec. Switch the UUT to Remote Mode by sending a Program Local/Remote Mode command (this is done automatically upon opening of the Spellman GUI/APPLET).If the unit is in Local Mode and enabled prior to switching it to Remote Mode, the UUT will shutdown and a P.S Fault indictor will occur when it is switch to Remote Mode. A clear command can be sent to clear this fault.

Remote Control: USB, Ethernet and RS232 are standard Refer to SLM Digital Protocol spec for Details.

Remote Monitor: Allows remote monitoring of the Output voltage and current via the USB, Ethernet or RS232.

Remote Programming: Allows remote programming of the Output voltage and current via the USB, Ethernet or RS232.

WARNING

It is extremely dangerous to use this circuit to inhibit high voltage generation for the purpose of servicing or approaching any area of load considered unsafe during normal use.

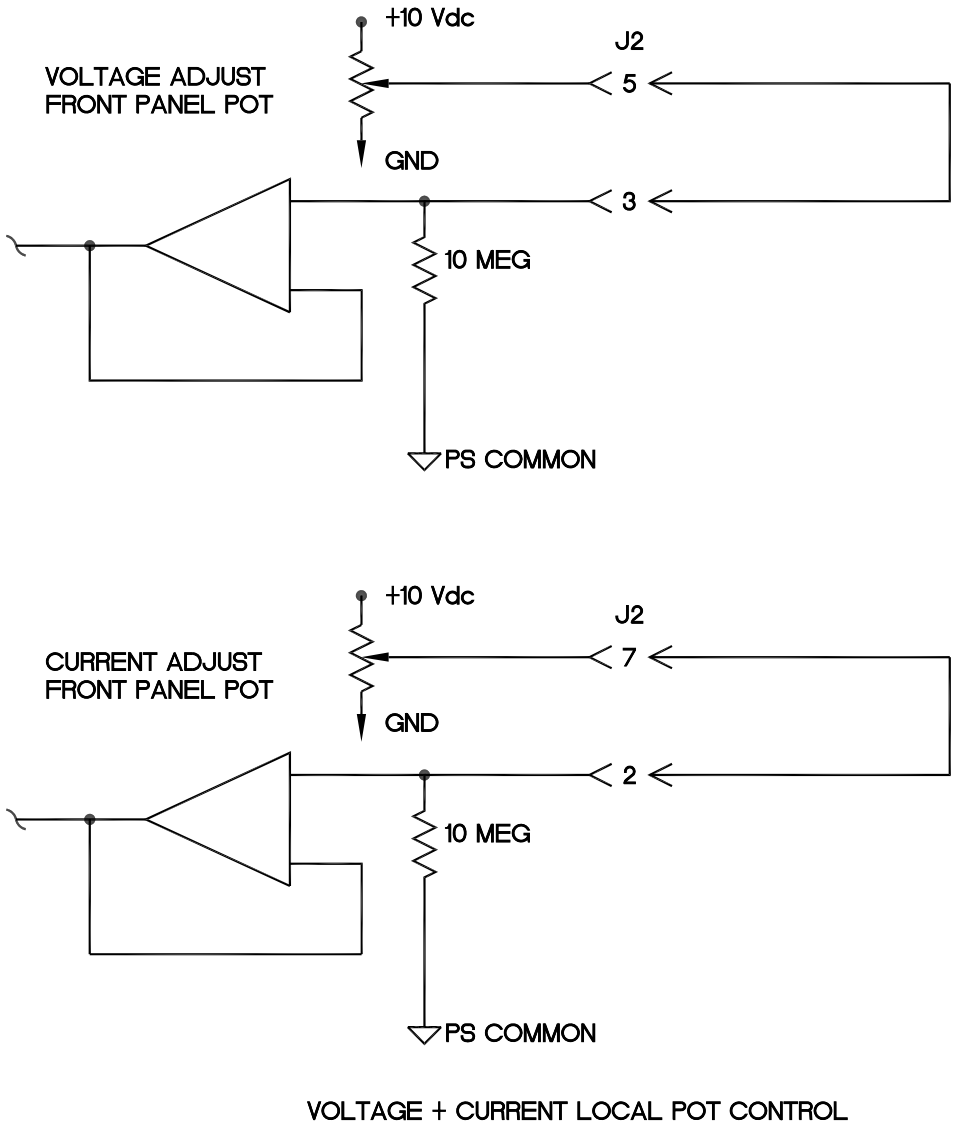

Figure 3.2 Local Programming Via Internal Front Panel Pot Voltage Source.

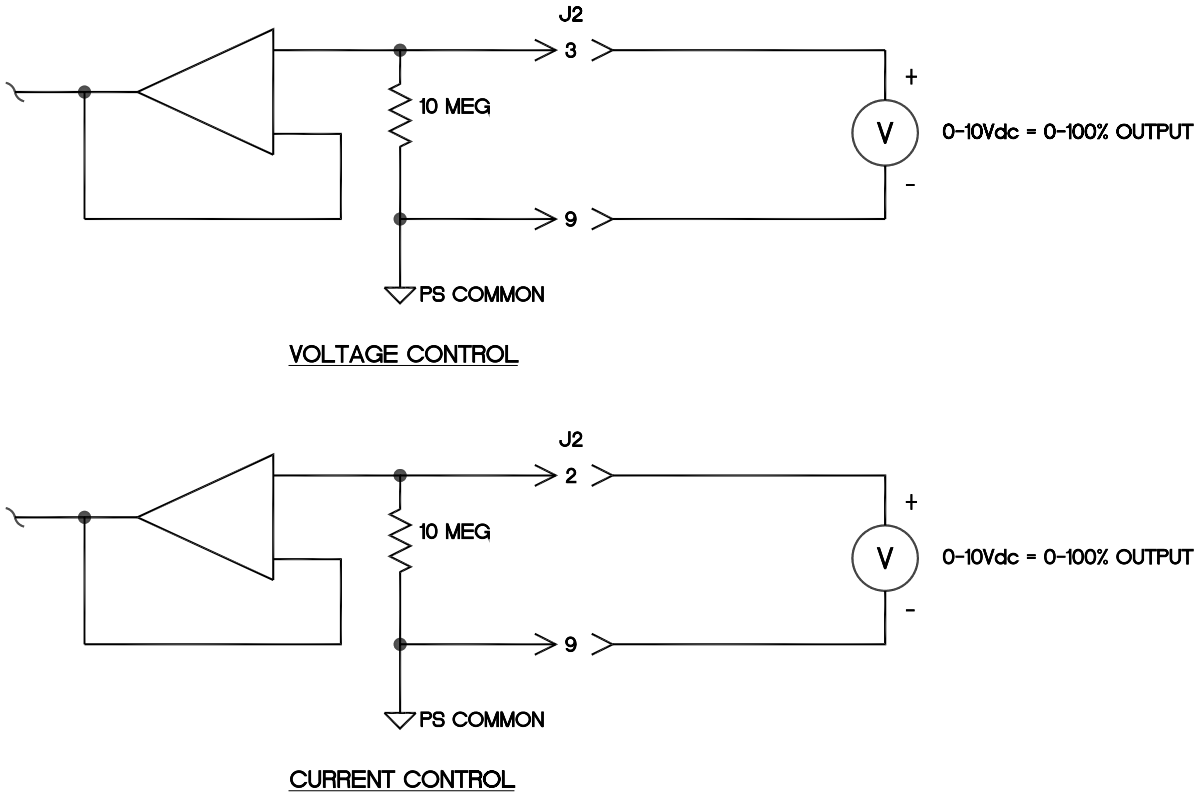

Figure 3.3 Local Programming via External Voltage Source

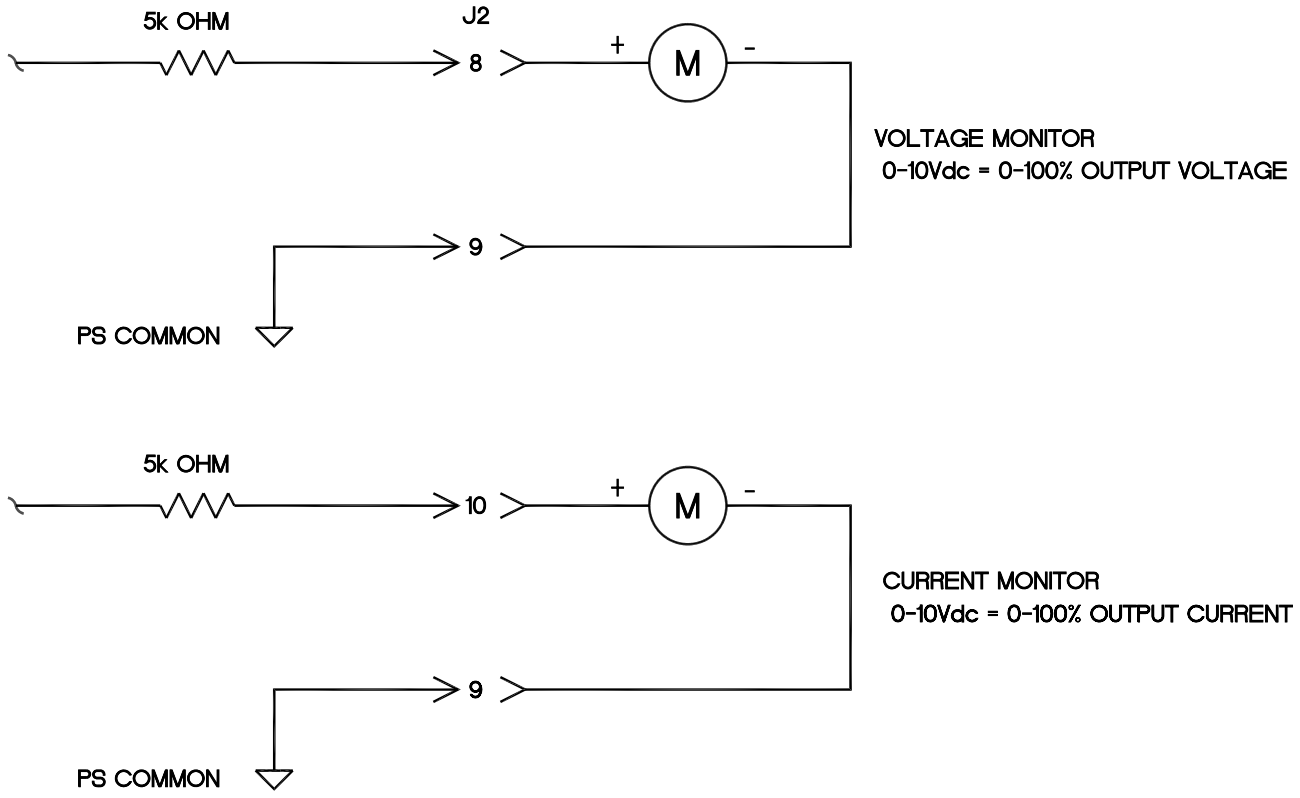

Figure 3.4 Remote Monitoring

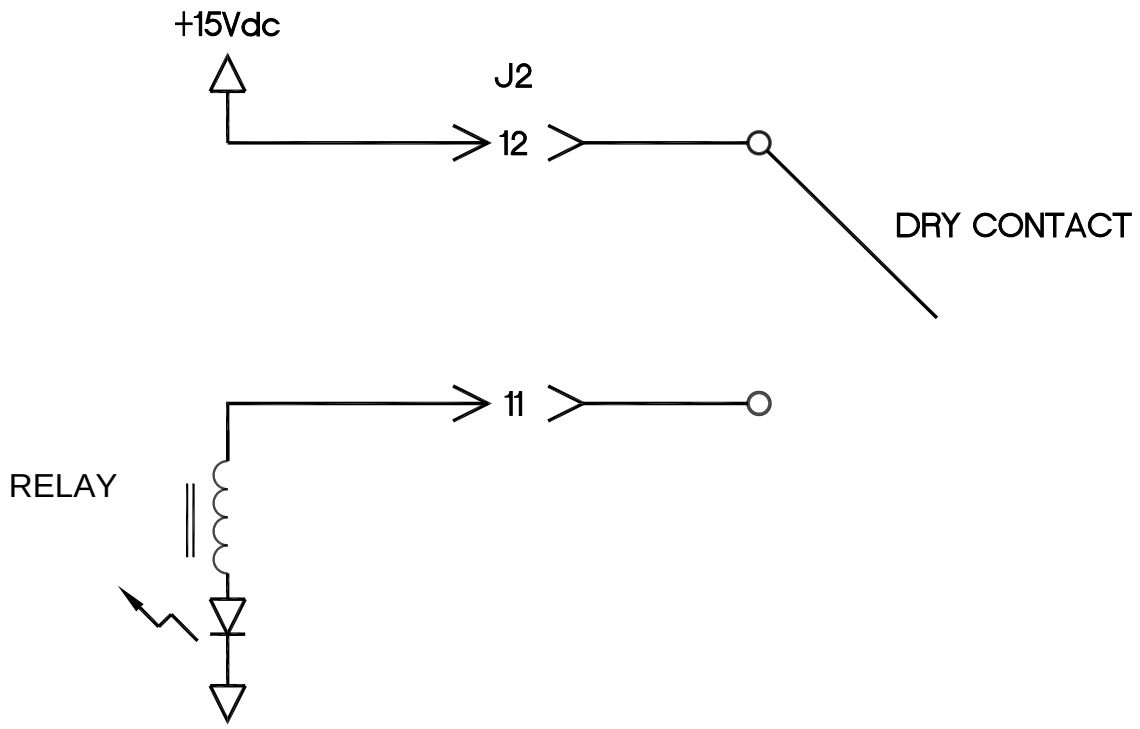

Figure 3.5 Enable/Interlock Logic Control

WARNING

It is extremely dangerous to use this circuit to inhibit high voltage generation for the purpose of servicing or approaching any area of load considered unsafe during normal use.

Chapter 4

PRINCIPLES OF OPERATION

The SLM Series of high voltage power supplies utilizes sophisticated power conversion technology. Advanced analog and power conversion techniques are used in the SLM series. The intention of the Principles of Operation is to introduce the basic function blocks that comprise the SLM power supply. For details on a specific circuit, consult Spellman's Engineering Department.

The SLM power supply is basically an AC to DC power converter. Within the power supply, conversions of AC to DC then to high frequency AC, then to high voltage DC take place.

Typical SLM power supplies comprise a few basic building blocks. These are: 1) AC to DC rectifier, 2) Power Factor correction boost circuitry 3) High frequency quasi-resonant inverter, 4) High voltage transformer and rectifier circuits, and 5) Control and monitoring circuits. The following is a brief description of each building block.

4.1 Power Factor and Associated Circuits

The SLM series can operate from 90 - 265Vac, for the 300Watt model and 180 –264Vac for the 600 and 1200Watt models. The input voltage is connected via a typical IEC 320 type input connector. An internal EMI filter and fuse housing is an integral part of the SLM module. The input circuits actively correct the power factor.

The input line voltage is applied to a current limit device to reduce the initial inrush current. The input line voltage is converted to a 400Vdc voltage via an active PFC Converter.

WARNING

The energy levels used and generated by the power supply can be lethal! Do not attempt to operate the power supply unless the user has a sufficient knowledge of the dangers and hazards of working with high voltage. Do not attempt to approach or touch any internal or external circuits or components that are connected or have been connected to the power supply. Be certain to discharge any stored energy that may be present before and after the power supply is used. Consult IEEE recommended practices for safety in high voltage testing #510-1983.

4.2 High Frequency Inverter

The SLM is a resonant converter operating in a zero current switching, series resonant, parallel loaded topology. MOSFET transistors switch the 400 Vdc voltage to the resonant tank circuit. Typical operating frequency is in the range of 35-65 KHz depending on model. Control of the resonant circuit output is done by the low voltage control circuits, and are isolated by an isolated pulse transformer. The output of the resonant circuit is applied to the primary of the high voltage transformer.

4.3 High Voltage Circuits

The high voltage transformer is a step-up type. The secondary of the high voltage transformer is connected to the high voltage output circuit. The output circuit will vary depending upon the rated output voltage and a full wave Cockroft-Walton multiplier is used. A feedback signal is generated by the high voltage resistor divider. This feedback signal is sent to control circuits to provide voltage regulation and monitoring. A current sense resistor is connected at the low voltage end of the output circuit. The circuit sense signal is sent to the control circuits to provide current regulation and monitoring.

The high voltage output is connected to the output limiting resistors. These resistors limit the peak surge current in the event an arc or discharge occurs. The limiting resistor output is connected to the output connector provided.

WARNING

THE HVPS IS DESIGNED TO HANDLE AN ARC RATE OF 1 ARC PER SECOND, EXCEEDING 1 ARC PER SECOND COULD CAUSE DAMAGE TO THE HVPS. HVPS FAILURE CAUSED BY EXCESSIVE ARC WILL NOT BE COVERED UNDER THE WARRANTY.

4.4 Control Circuits

Control circuits are used for regulation, monitoring, pulse-width, control, slow-start and inhibit control. Feedback signals are calibrated and buffered via general purpose OP-AMPS. Pulse width control is accomplished by a typical PWM type control I.C. Logic enable/disable is provided by a logic gate I.C. Regulators generate ± 15Vdc and 10Vdc. DSP based control circuitry provides excellent regulation, along with outstanding stability performance

WARNING

LINE VOLTAGE IS PRESENT WHENEVER THE POWER SUPPLY IS CONNECTED TO EXTERNAL LINE VOLTAGES. BE SURE TO DISCONNECT THE LINE CORD BEFORE OPENING THE UNIT. ALLOW 5 MINUTES FOR INTERNAL CAPACITANCE TO DISCHARGE BEFORE REMOVING ANY COVER.

4.5 Options

Due to the variations of models and options provided in the SLM series, details of actual circuits used may differ slightly from above descriptions. Consult Spellman's Engineering Department for questions regarding the principles of operations for the SLM series.

Chapter 5

5.1 Custom Designed Models X (#)

Units built to customer specifications are assigned an X number be the factory. If this unit is an X model, specification control sheet is added at the end of this instruction manual.

Chapter 6

MAINTENANCE

This section describes periodic servicing and performance testing procedures.

WARNING

THIS POWER SUPPLY GENERATES VOLTAGES THAT ARE DANGEROUS AND MAY BE FATAL.

OBSERVE EXTREME CAUTION WHEN WORKING WITH HIGH VOLTAGE.

6.1 Periodic Servicing

Approximately once a year (more often in high dust environments), disconnect the power to the unit. Use compressed air to blow dust out of the inside of the unit. Avoid touching or handling the high voltage assembly.

6.2 Performance Test

WARNING

HIGH VOLTAGE IS DANGEROUS. ONLY QUALIFIED PERSONNEL SHOULD PERFORM THESE TESTS.

High voltage test procedures are described in Bulletin STP-783, Standard Test Procedures for High Voltage Power Supplies. Copies can be obtained from the Spellman Customer Service Department. Test equipment, including an oscilloscope, a high impedance voltmeter, and a high voltage divider such as the Spellman HVD-100 is needed for performance tests. All test components must be rated for operating voltage.

6.3 High Voltage Dividers

High voltage dividers for precise measurements of output voltage with an accuracy up to 0.1% are available from Spellman. The HVD-100 is used for voltages up to 100KV. The Spellman divider is designed for use with differential voltmeters or high impedance digital voltmeters. The high input impedance is ideal for measuring high voltage low current sources, which would be overloaded by traditional lower impedance dividers.

Chapter 7

FACTORY SERVICE

7.1 Warranty Repairs

During the Warranty period, Spellman will repair all units free of charge. The Warranty is void if the unit is worked on by other than Spellman personnel. See the Warranty in the rear of this manual for more information. Follow the return procedures described in Section 7.2. The customer shall pay for shipping to and from Spellman.

THE SLM HVPS IS DESIGNED TO HANDLE AN ARC RATE OF 1 ARC PER SECOND. EXCEEDING 1 ARC PER SECOND COULD CAUSE DAMAGE TO THE HVPS. HVPS FAILURE CAUSED BY EXCESSIVE ARC WILL NOT BE COVERED UNDER THE WARRANTY.

7.2 Factory Service Procedures

Spellman has a well-equipped factory repair department. If a unit is returned to the factory for calibration or repair, a detailed description of the specific problem should be attached.

For all units returned for repair, please obtain an authorization to ship from the Customer Service Department, either by phone or mail prior to shipping. When you call, please state the model and serial numbers, which are on the plate on the rear of the power supply, and the purchase order number for the repair. A Return Material Authorization Code Number (RMA Number) is needed for all returns. This RMA Number should be marked clearly on the outside of the shipping container. Packages received without an RMA Number will be returned to the customer. The Customer shall pay for shipping to and from Spellman.

A preliminary estimate for repairs will be given by phone by Customer Service. A purchase order for this amount is requested upon issuance of the RMA Number. A more detailed estimate will be made when the power supply is received at the Spellman Repair Center. In the event that repair work is extensive, Spellman will call to seek additional authorization from your company before completing the repairs.

7.3 Ordering Options and Modifications

Many of the options listed in Chapter 5 can be retrofitted into Spellman power supplies by our factory. For prices and arrangements, contact our Sales Department.

7.4 Shipping Instructions

All power supplies returned to Spellman must be sent shipping prepaid. Pack the units carefully and securely in a suitable container, preferably in the original container, if available. The power supply should be surrounded by at least four inches of shock absorbing material. Please return all associated materials, i.e. high voltage output cables, interconnection cables, etc., so that we can examine and test the entire system.

All correspondence and phone calls should be directed to:

Spellman High Voltage Electronics Corp.
475 Wireless Boulevard
Hauppauge, New York 11788
TEL: (631) 630-3000 FAX: (631) 435-1620
E-Mail: sales@Spellmanhv.com
http://www.spellmanhv.com

To obtain information on Spellman's product warranty please visit our website at:

http://www.spellmanhv.com/en/About/Warranty.aspx

Spellman®
High Voltage Electronics Corporation

SLM Digital Interface Manual

Ethernet
Serial – RS-232
Universal Serial Bus - USB

USA CHINA EUROPE JAPAN MEXICO

475 Wireless Boulevard • Hauppauge, New York 11788, USA • www.spellmanhv.com • T:+1 631.630.3000 • F:+1 631.435.1620

118080-001 REV B

Table Of Contents

WARNING

THIS EQUIPMENT GENERATES DANGEROUS VOLTAGES THAT MAY BE FATAL. PROPER GROUNDING OF ALL HIGH VOLTAGE EQUIPMENT IS ESSENTIAL.SEE SLM OWNERS MANUAL FOR PROPER GROUNDING TECHNIQUE AND SAFETY PRECAUTIONS BEFORE APPLING AC INPUT POWER TO THE SLM UNIT.

TO PREVENT DAMAGE TO THE HOST COMPUTER ,THE COMPUTER SHOULD BE GROUNDED TO THE UNIT.

1.0 SCOPE

This document applies to the communications interfaces on the SLM, assembly 460067.

2.0 FUNCTIONAL DESCRIPTION

The SLM provides 3 different types of digital communications interfaces:

- RS-232 on J3
- Ethernet (10/100-Base-T) on J5
- Universal Serial Bus on J4.

3.0 GETTING STARTED - INTERFACE WIRING AND PIN-OUTS

3.1 RS232 INTERFACE

The RS232C interface has the following attributes:

- 115K bits per second
- No Parity
- 8 Data Bits
- 1 Stop Bit
- No handshaking
- DB-9 connector as shown

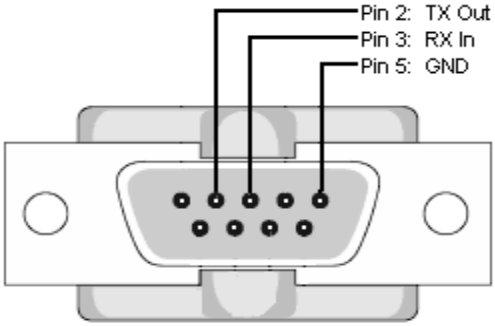

SIC Serial Port: DB-9 Male

Figure 1 – J3, RS-232 DB-9M pinout (front view)

PIN	DESCRIPTION
1	-
2	Tx Out
3	Rx In
4	-
5	Ground
6	-
7	-
8	-
9	-

3.2 ETHERNET INTERFACE

The Ethernet interface has the following attributes:

- 10/100-Base-T
- IP address can be set by the system integrator
- Network Mask can be set by the system integrator
- TCP Port Number can be set by the system integrator
- RJ-45 connector
- Network attachment via Crossover and Standard Ethernet cables.
- Supported Operating Systems: Windows 98 2ED, Windows 2000 (SP2), Windows NT (SP6), Windows XP Professional

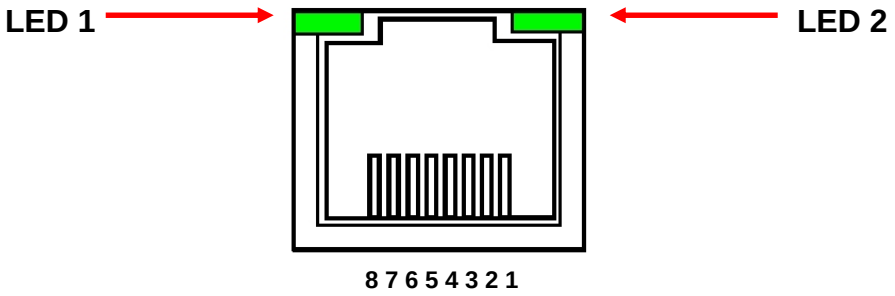

Figure 2 – J5, Ethernet RJ45 Jack (front view)

PIN	DESCRIPTION
1	TX+
2	TX-
3	RX+
4	-
5	-
6	RX-
7	-
8	-

The Ethernet RJ-45 has two LED indicators, as shown in Figure 2. The left LED, LED1 indicates that the network processor has a valid network link. The right LED, LED2 indicates network activity.

3.3 USB – UNIVERSAL SERIAL BUS INTERFACE

The USB interface has the following attributes:

- Compliant with USB 1.1 and USB 2.0 specifications
- Type B male connector
- Included driver can be communicated with via standard Windows serial communications methods

Figure 3 – J4, USB Type B (front view)

PIN	DESCRIPTION
1	Vbus +5V
2	D-
3	D+
4	Ground

3.4 RS-232 CABLING

A standard shielded RS-232 cable is used to connect the SLM serial port to the serial port on a standard personal computer. Please refer to the following chart.

PC to SLM Board Cable Details	
PC Connector (DB-9 Female)	SLM Connector (DB-9 Male)
Pin 2: RX In	Pin 2: TX Out
Pin 3: TX Out	Pin 3: RX In
Pin 5: Ground	Pin 5: Ground

3.5 ETHERNET CABLING

Shielded Category 5 (CAT5) Ethernet patch cables are used to connect the SLM to the host computer. There are two ways to connect to the SLM board via Ethernet: the first is to directly cable between the host and the SLM board, and the second is through the use of a switch, hub, or network.

A direct connection requires a non-standard cable where the wires are not run straight through. Please refer to the two cable ends shown below in figure 4.

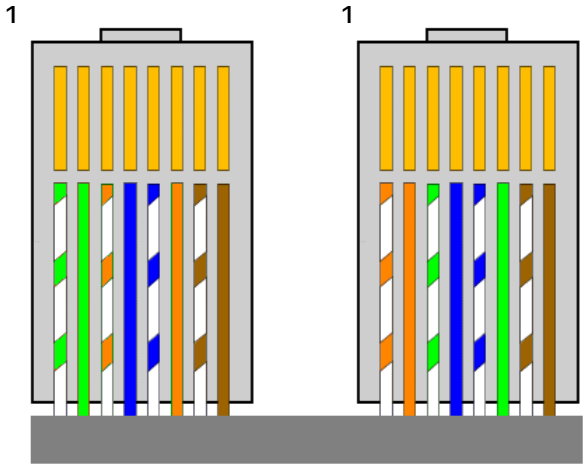

Figure 4 – Crossover Cable for Direct Connection

A standard connection through a hub, switch, or network uses a standard CAT5 patch cable. Please refer to the two cable ends shown below in figure 5.

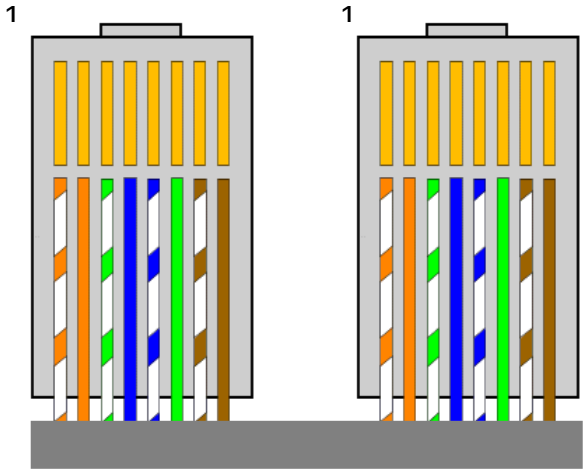

Figure 5 – Standard Straight Through Cable – Standard CAT5 Patch

3.6 USB CABLING

A high-quality double-shielded USB 2.0 Type A to B (host to slave) cable should be used in all applications. This type of cable is a standard PC to peripheral cable that utilizes full-size connectors.

Figure 6 – USB A-to-B cable

3.6.1 HIGH EMI ENVIRONMENTS

If the SLM USB interface is being used in a high-EMI environment, ferrites should be added to the USB cable. Figure 7 illustrates the possible combinations of ferrites that can be used to achieve acceptable operation under these conditions.

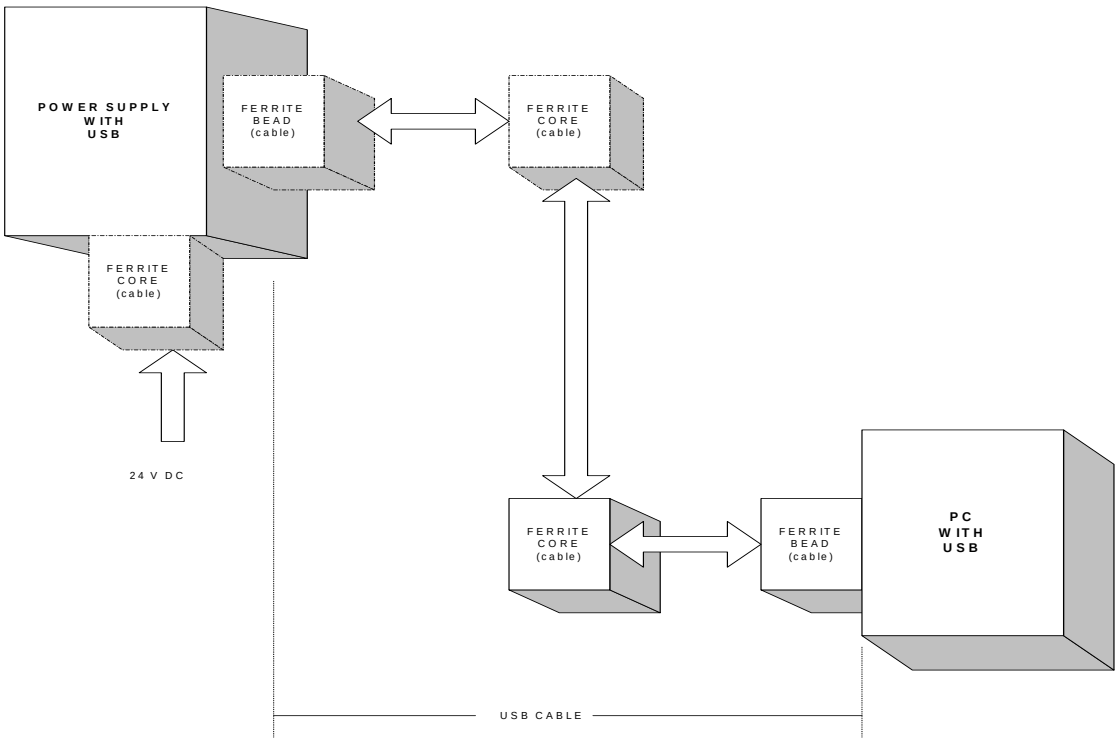

Figure 7 – Block Diagram of USB Cable Utilizing Ferrites

Ferrite beads should be attached to the USB cable next to the connectors – both sides should be installed. In extreme cases ferrite cores may be added where the cable is looped 3 or 4 times around the core as shown in figure 8. Cores of 1.5 to 2 inches should be used at both ends of the cable.

Figure 8 - Example of a USB Cable Using Ferrites

Please refer to the USB Interface Setup section, for an explanation of how USB works and why EMI may present a problem for this communications interface.

4.0 GETTING STARTED – SOFTWARE

The following sections detail how to create software to interface to the SLM communications interfaces.

4.1 RS-232

The RS-232 interface makes use of a standard 'command/response' communications protocol. See section 6.0 for the syntax of the serial interface protocol. The programmer should also review section 4.3 for programming considerations for the USB interface as the code is nearly identical for the RS-232 interface.

All software that addresses the RS-232 interface must adhere to the following parameters:

- A default Baud rate of 115.2K bps
- No Parity
- 8 Data Bits
- 1 Stop Bit
- No handshaking

The Baud rate can be changed to 115.2K ,57.6k,38.4k,19.2k or 9600 bps and stored in the unit.

4.1.1 Enabling Communications Objects in Visual Basic for RS-232

Communications in Microsoft Visual Basic 6.0 are directed to a control that abstracts the port. In the case of serial and USB we need Microsoft Comm Control 6.0. To enable this in your VB 6 project, go to:

Project -> Components

Then in the list make sure that Microsoft Comm Control 6.0 has a check next to it. The Comm Control Object should then appear in your toolbox. It will have an icon of a telephone and will be named: MSComm. This can be dragged and dropped into your application. You will then need to set the object's properties.

4.1.2 Configuring Communications in Visual Basic for RS-232

In order to configure the MSComm Object, first you must initialize it in the Object properties:

Settings	115200,n,8,1
Handshaking	0 – comNone

The application can be set to either default to a specific COM Port or the End User can be allowed to choose one for the particular PC.

For the “Default” scenario, include the following commands in the Form_Load() routine:

```
MSComm1.CommPort = portNumber
MSComm1.PortOpen = True
```

For the “Choice” scenario, place the above two commands in a selectable menu item.

4.2 ETHERNET

The SLM contains an embedded diagnostic web server that can be accessed through any standard web browser by browsing to the SLM's IP address. For example:

http://192.168.1.4

The Ethernet interface communicates using the following protocols:

- TCP/IP
- HTTP
- TFTP
- FTP

4.2.1 Diagnostic Web Server

The diagnostic web server can control and monitor an SLM equipped power supply from a web browser. It displays operating status of the Power Supply and allows the unit to be configured in real time. The application consists of three web pages; a page displaying contact information, a license agreement, and a monitoring and control applet that is at the heart of this application. In order for the Web Server to work with the latest Java release, an exception has to be made in java. The following steps explain how to enter an Applet's designated IP address to Java's exception list. We used Java 7 Update 60 and Internet Explorer 10.

1. The exception feature of Java allows to run an Applet which doesn't meet all of Java's security checks. To use it, you need to open the Java Configure menu and enter the IP address assigned to the device which hosts the Applet. To open the Java Configure menu, you click on the Windows icon and look for the Configure Java program; if it doesn't show on the Task Bar, select All Programs and look for the Java folder and click it. You should see the Configure Java option, click on it.


CCStudio v3.3
Microsoft Visual Studio 2010
Adobe Reader X
Microsoft Visual Basic 6.0
Standard XRV GUI
Remote Desktop Connection
Print CD
P-CAD SCH Viewer
LANDesk Antivirus
Configure Java
All Programs
Search programs and files
Felix Valladares
Documents
Pictures
Music
Computer
Control Panel
Devices and Printers
Default Programs
Help and Support
Shut down

2. When the Java Control panel appears, click on Security tab.

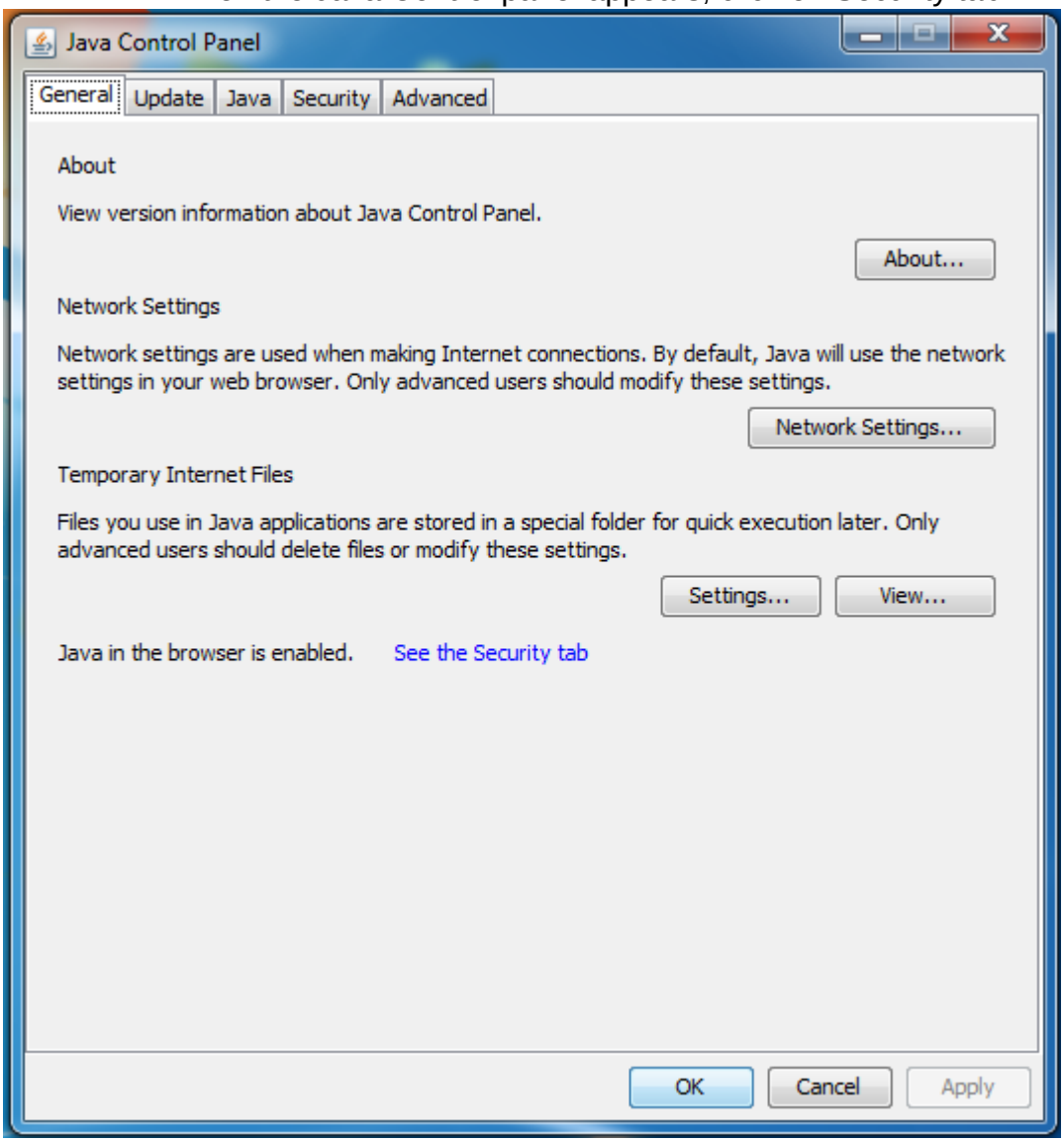

3. On the blank text box enter the IP address assigned to your unit as shown below. The IP address shown in the picture below is the default factory configuration IP address.

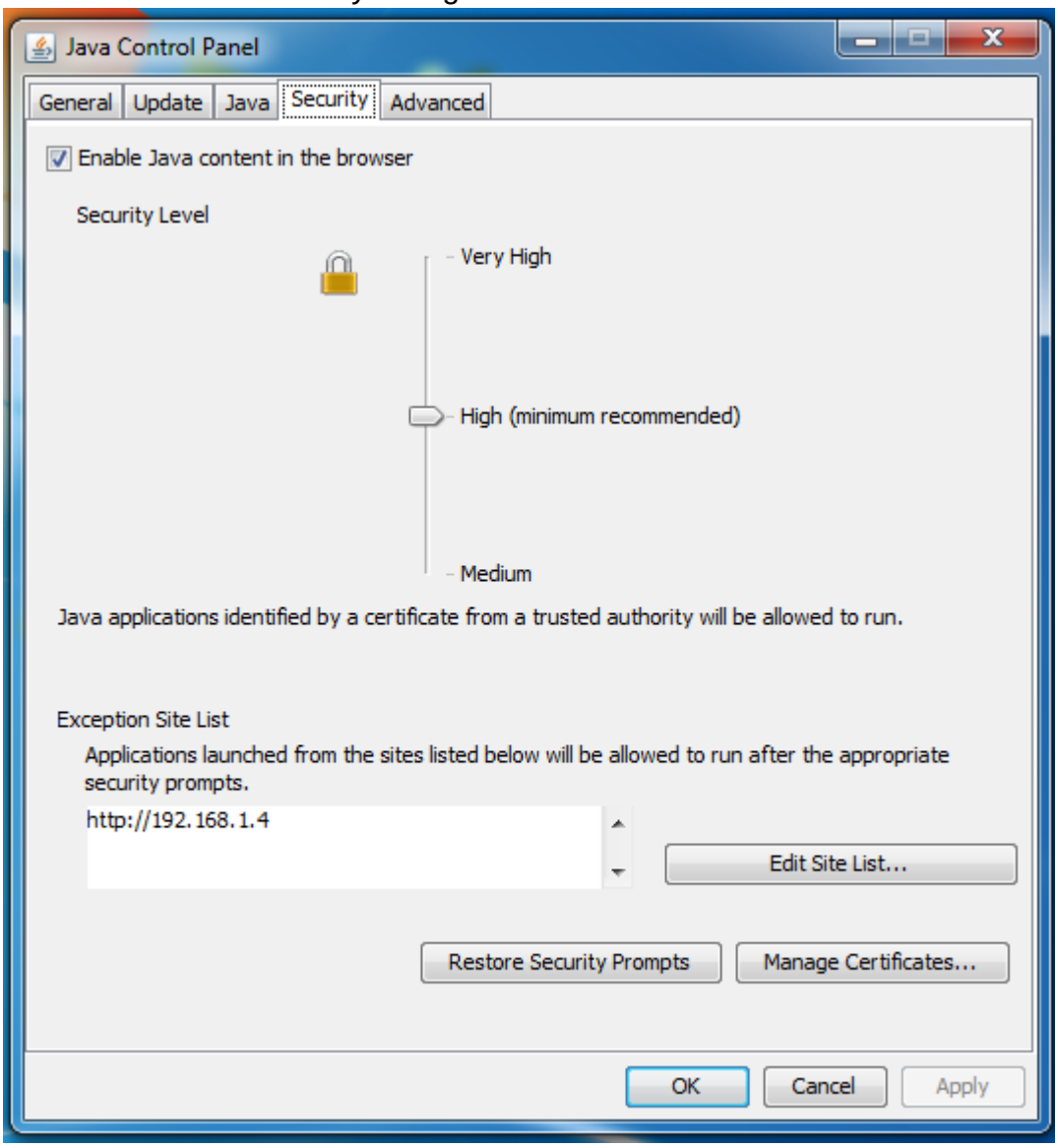

4. You have finished entering your device address on Java's exception list. Next, you will open your browser and try to talk to the Applet the way you normally do. If you are using Internet Explorer and get the following window, select the Run this time button.

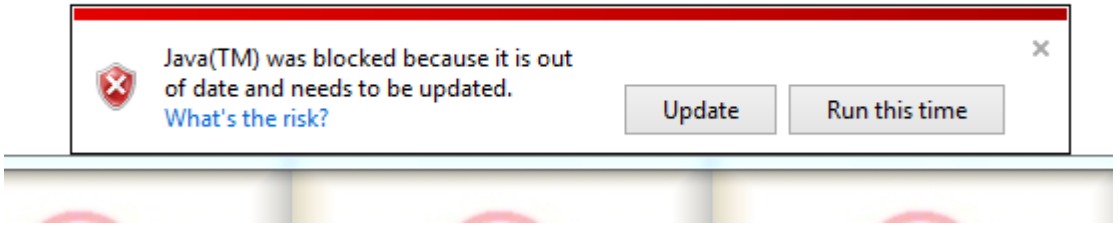

5. If you are using Internet Explorer and get the following window, select the RUN option.

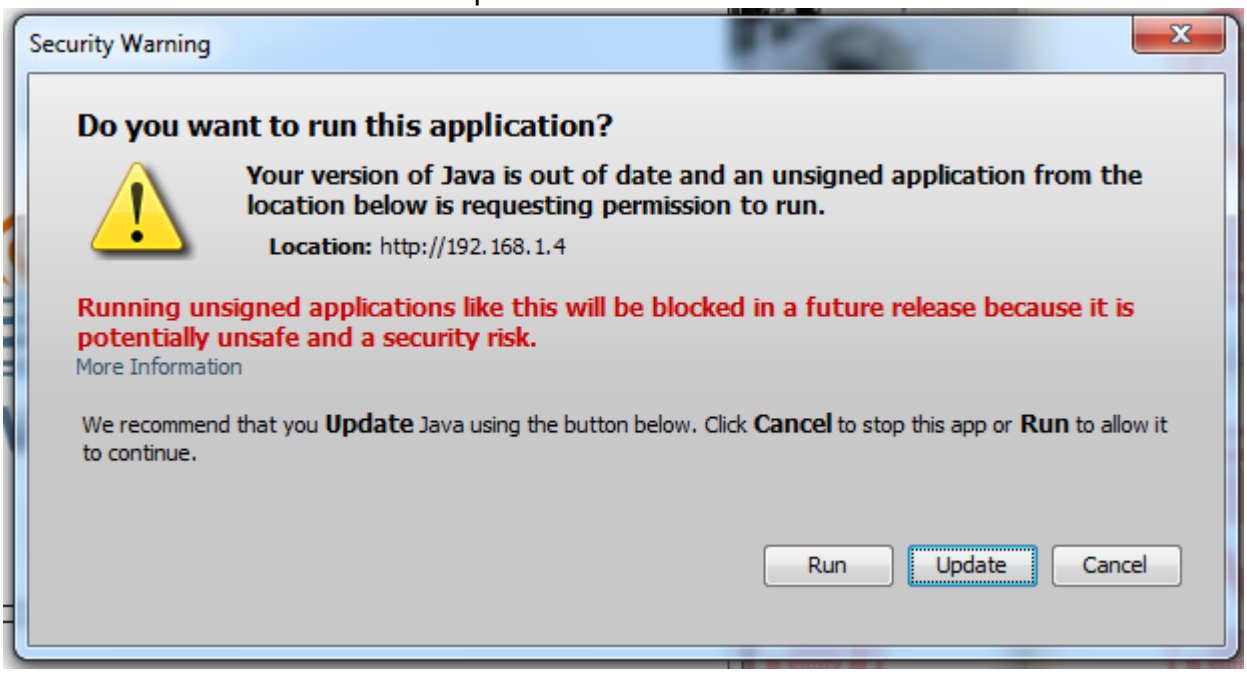

6. After entering Username and Password, the applet should connect with your unit.

4.2.2 Web Pages

4.2.2.1 Web Page 1: Contact Information Page

Figure 9 displays a picture of the SLM and information on how to contact Spellman High Voltage Electronics Corporation. By clicking on the picture of the SLM or on the button labeled “Click Here to Monitor and Control” one can move on to the next screen, the license agreement.

Figure 9 - Web Page 1- Contact Information

4.2.2.2 Web Page 2: License Agreement Page

Figure 10 displays the license agreement. Here the user can either agree or disagree with the Spellman license agreement. Click on “I Accept” to continue on to the applet.

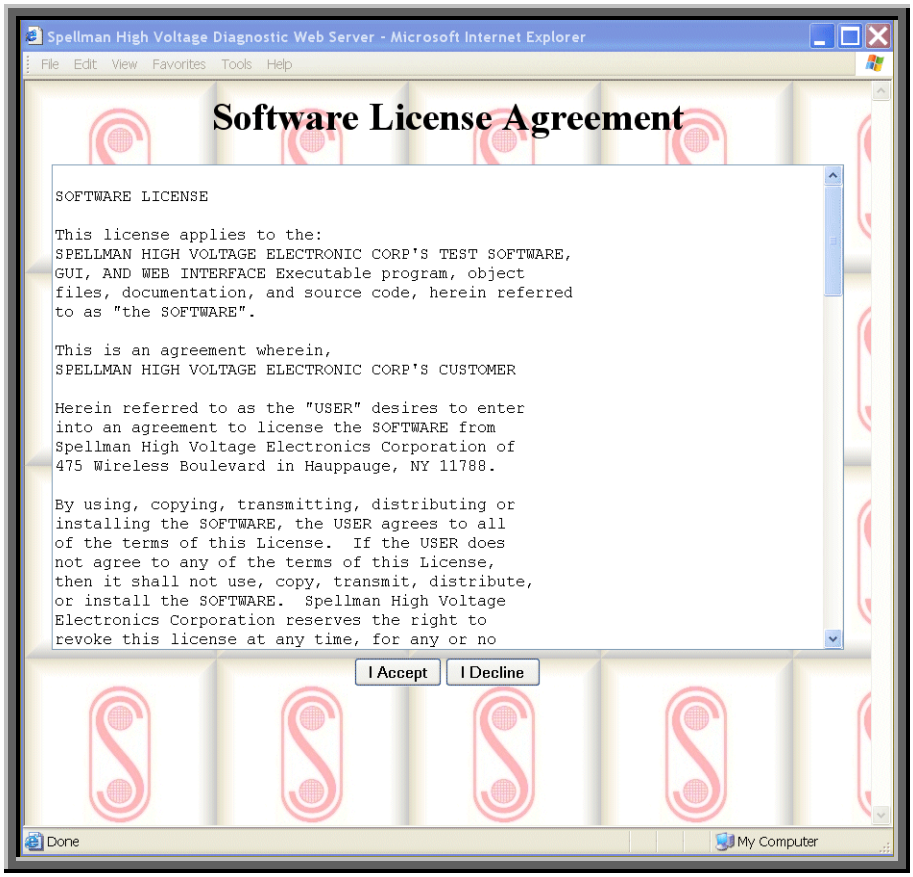

Figure 10 - Web Page 2 – License Agreement

4.2.2.3 Web Page 3 - Monitor and Control Applet

4.2.2.3.1 Requirements

The Monitor and Control Applet is a java “applet” (“small java application” specifically written to be embedded in a web page and invoked from a browser) that requires an Internet browser with an installed JVM (Java Virtual Machine). The password for the applet is: **shvapplet**. We have tested under Internet Explorer 5 and 6, Microsoft JVM 5 and Sun JVM versions 1.6 and higher.

4.2.2.3.2 Description of Monitor and Control Applet

Figure 11 displays an example of an embedded monitor and control application.

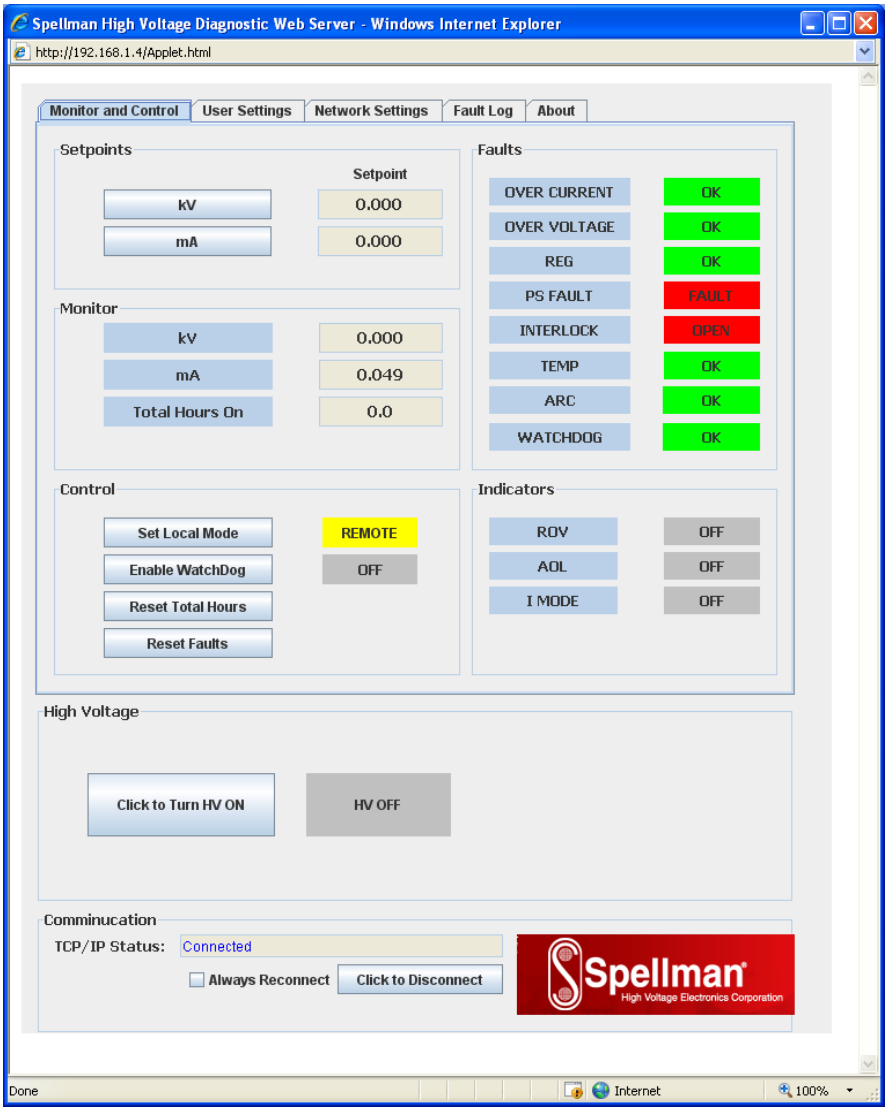

Figure 11 - Control and Monitor Applet

View the screen as a “left” and a “right” with the right half containing status read from the SLM and the left half containing the values that are programmable by the user. For any programmable setting you click on the button to the left of the setting, which brings up the program set point screen. For example, click on the button labeled, ‘V’ to set the output voltage set point. Refer to figure 12.

4.2.2.4 Program Set Point Screen

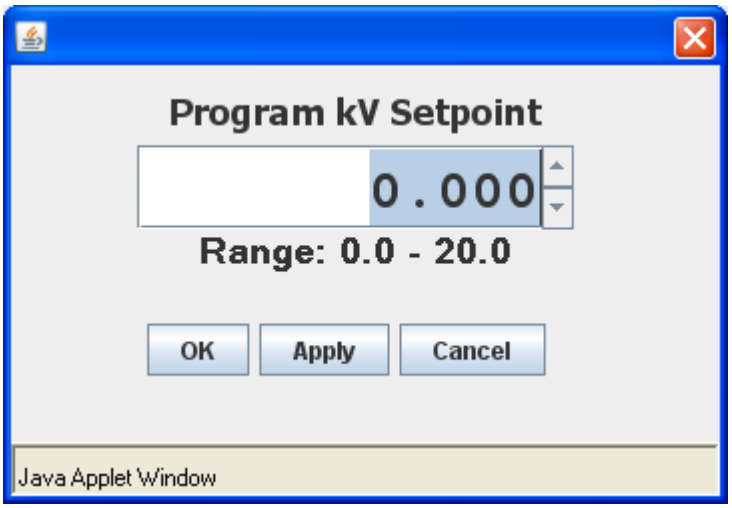

Figure 12 - Program Configurable Values Screen

The field is the scaled value or real world value. Enter the desired set point level within the shown range.

The user can then click Apply to send the set point to the SLM and remain in the set point screen, or click OK to send the set point and close the set point entry window. The user may also click on Cancel to close the window without sending any changes.

To reset the Total hour On meter to zero via the Applet a password is required.The password is **“SHV_Reset”**

4.2.2.5 Java Warning Messages

You may notice a message at the bottom of all dialog windows that are displayed from the SLM Control and Monitor Applet. The wording may vary slightly depending on the JVM version but on some the message is “Java Applet Window”. This message informs the user that the dialog window was generated by an applet. The design philosophy for the JVM was for secure computing, so the origins of new windows are supposed to be as obvious as possible.

4.2.2.6 “Tabs” on Applet

The user can view and set operating parameters of the applet or network configurations of the SLM or view firmware version information by changing tabs.

4.2.2.7 User Settings

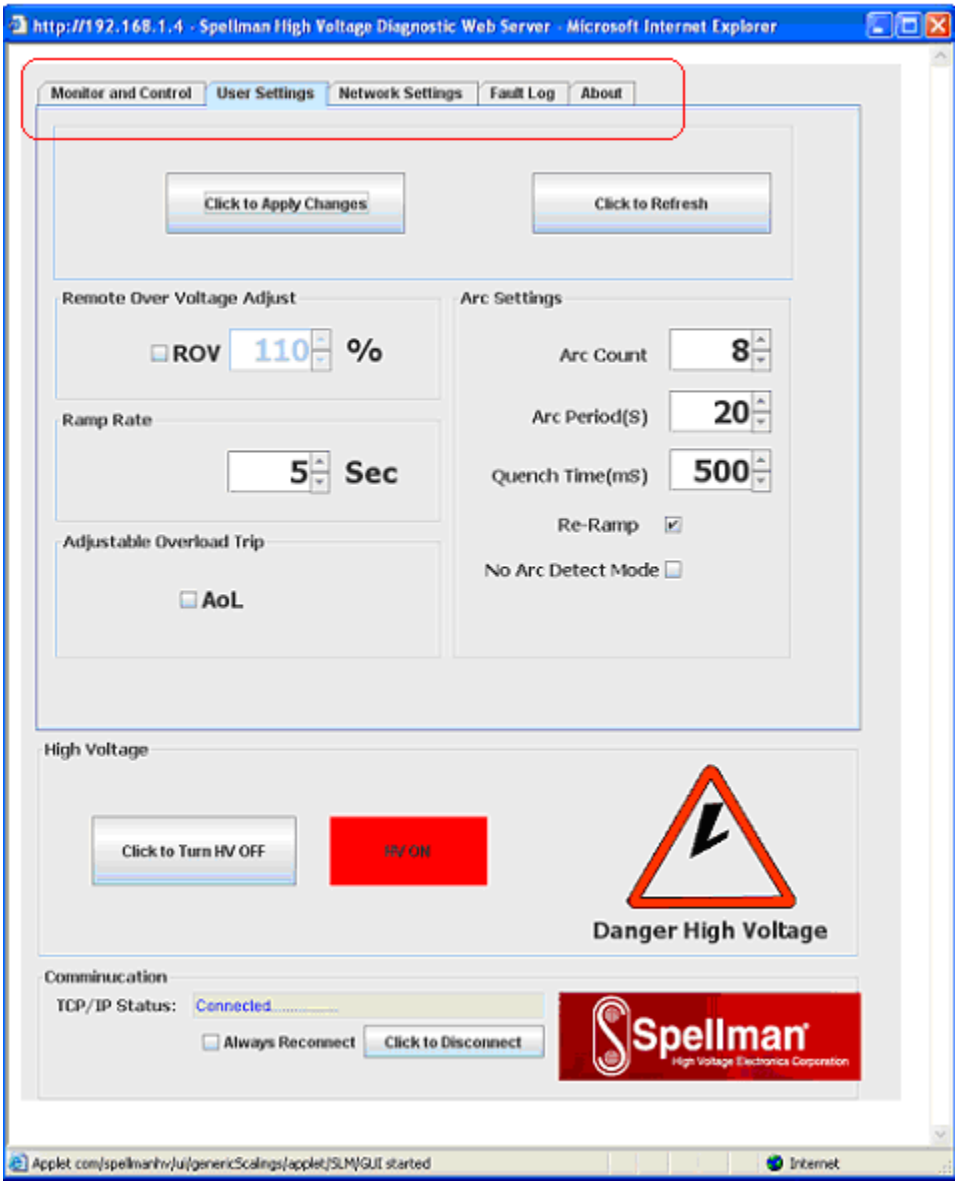

Figure 13 – User Setting

The User Settings tab allows the user to set firmware configurable options, as shown above. After making changes to the options, click on the “Click to Apply Changes” button.

4.2.2.8 Fault log

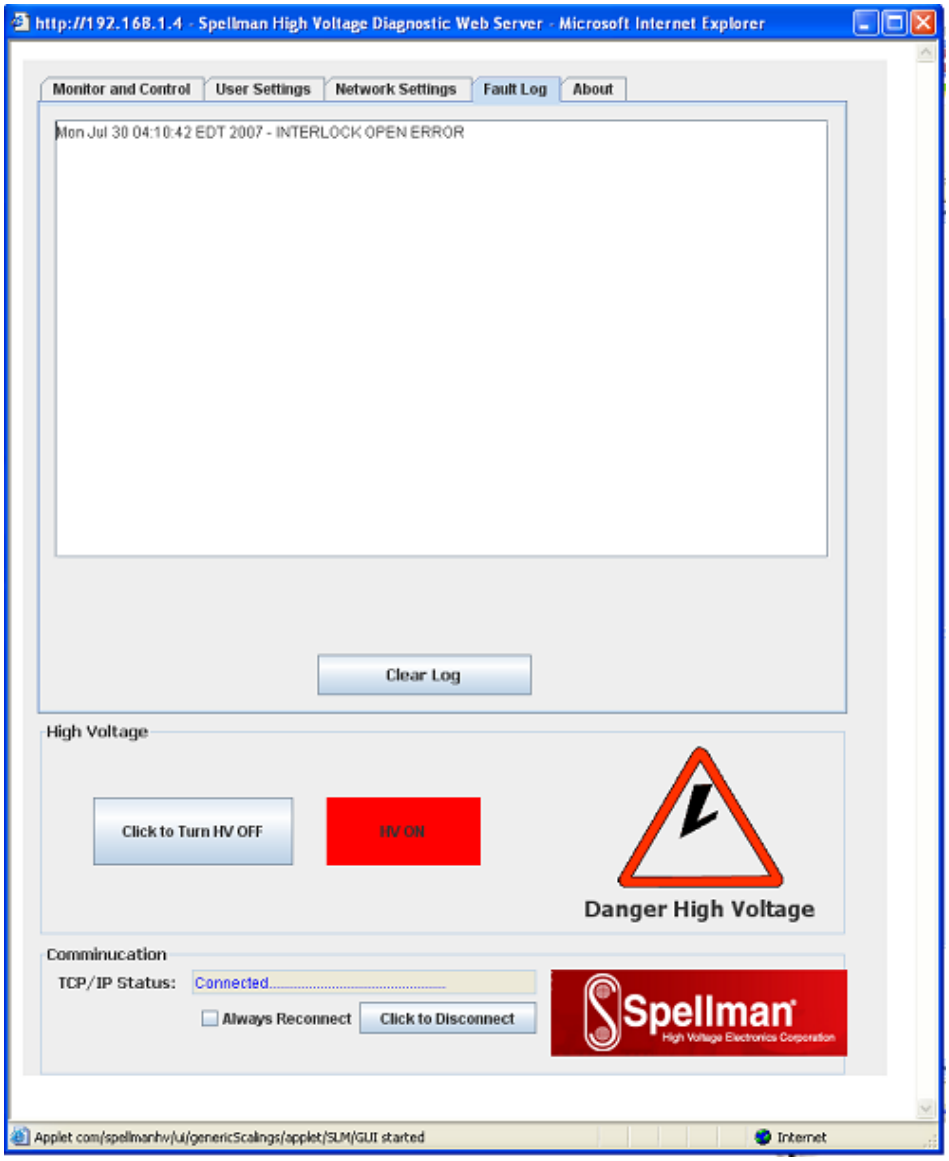

Figure 14 – Fault log

Fault log displays faults with their date and time.

4.2.2.9 About

Displays version information and model number.

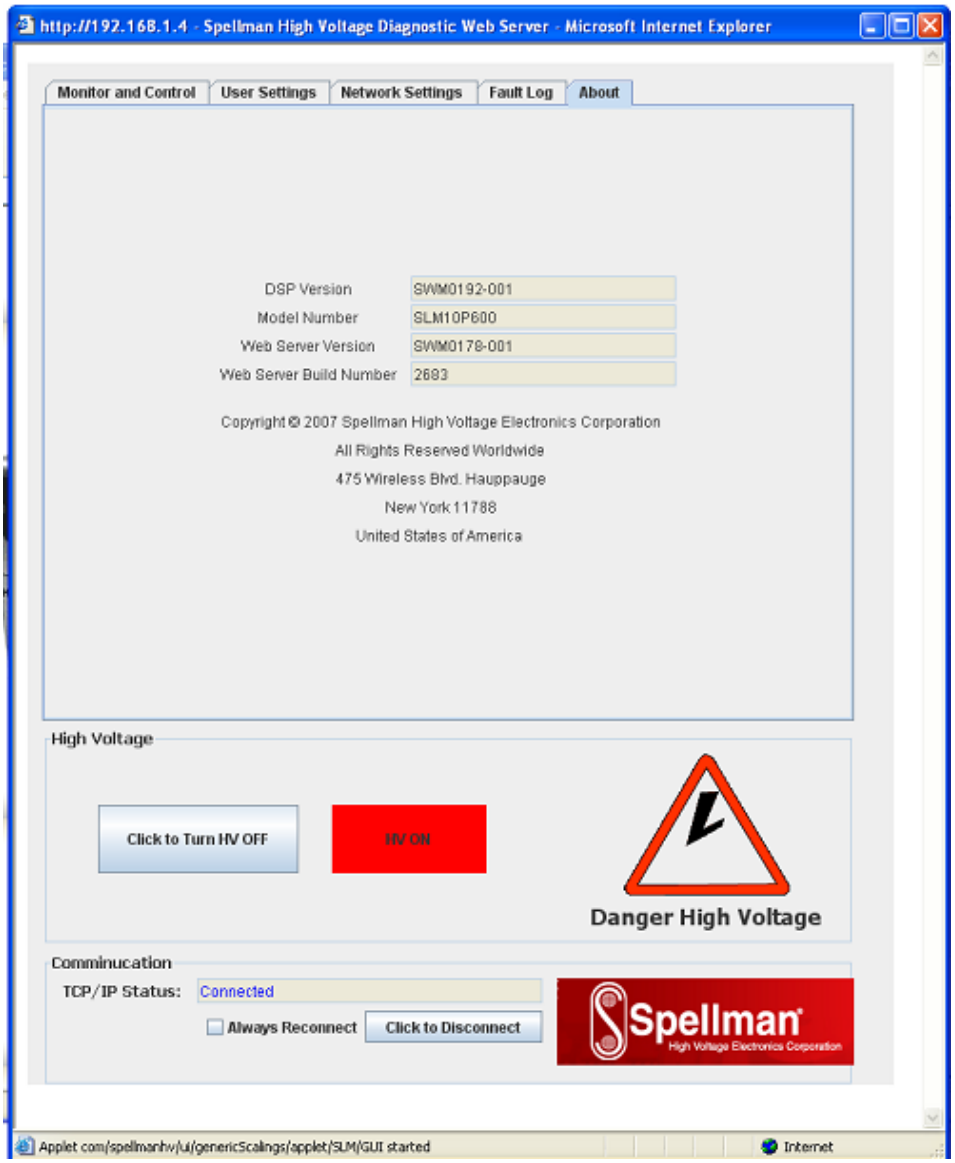

Figure 15 – About

4.2.2.10 Turning the SLM HVOn/Off and Connection Status

Please refer to Figure 11, the Monitor and Control Applet.

Setting Name	Range Values
Local/Remote	Local mode/Remote mode
HV	On/Off
Interlock	Open/Closed
Fault Status	OK/Fault
Connection Status	Connected/No Data Received/Disconnected

Unlike the controls we previously discussed at the top of the screen which required a separate dialog screen to enter values, these are controlled by a button. For example, an On/Off button controls the HV. When HV is on, the Control is labeled “Click to Turn HV Off”. When HV is off, the control is labeled “Click to Turn HV On”. Thereby handling the two distinct states.

Notice that at the very bottom of the screen is a text field that displays the current connection status, which as mentioned above is one of three values. “Connected” is displayed when there exists a valid TCP/IP session connecting the SLM and the Applet and data is being received by the applet from the SLM. The next state is “No Data Received” which is when there is still a valid connection but no responses have been received from the SLM for 2 seconds. Lastly, the text field displays “Disconnected” when the TCP/IP session has been disconnected. To operate the UUT using the Computer interface the UUT must be set to Remote Mode by Clicking “Click to Set Remote, the SLM Applet automatically sets the unit to Remote mode upon connecting.

When the Applet is first started and anytime the “Click To Connect” button is clicked there is a 5 second delay as the Applet starts up the threads necessary for communication between it and the SLM.

4.2.3 Direct Connection between the SLM and a Computer

A direct Ethernet connection between the SLM and the computer requires an RJ45 crossover cable. The end connectors will look identical to a “normal” RJ45 connector but the colors of some of the wires in the connectors will be “reversed”. Hold up the two ends of the RJ45 cable and look at the color of the wires from left to right. They should differ on the two connectors.

When direct connecting the SLM to a computer using a crossover cable over Ethernet they are essentially participating in a private network. As such you need to pick two valid IP addresses, one for each device.

The table below illustrates that not all IP addresses are actually valid IP addresses. For example, IP addresses beginning with 127 are not valid.

Class	Address Range
A	1.0.0.0-126.255.255.255
B	128.0.0.0-191.255.255.255
C	192.0.0.0-223.255.255.255

4.2.3.1 Configuring the Computer for Direct Ethernet Connection

As mentioned above both the IP Address and Subnet Mask need to be configured. In our environment computers normally are assigned IP addresses dynamically, using DHCP. We need to change this and assign the IP Address statically to the one we have selected.

Here are the steps on Windows XP. On the desktop right click on “My Network Places” and select properties at the bottom of the menu.

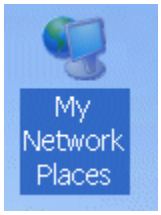

Figure 16 – Right Click on Desktop

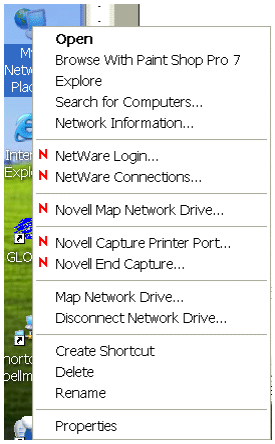

Figure 17 – Select Properties

After selecting properties you are brought up to the screen below (Figure 18). You must RIGHT CLICK and select Properties on Local Area Connection, and not double click which will display a window similar to figure 19.

Figure 18 – Here you must Right Click and Select Properties

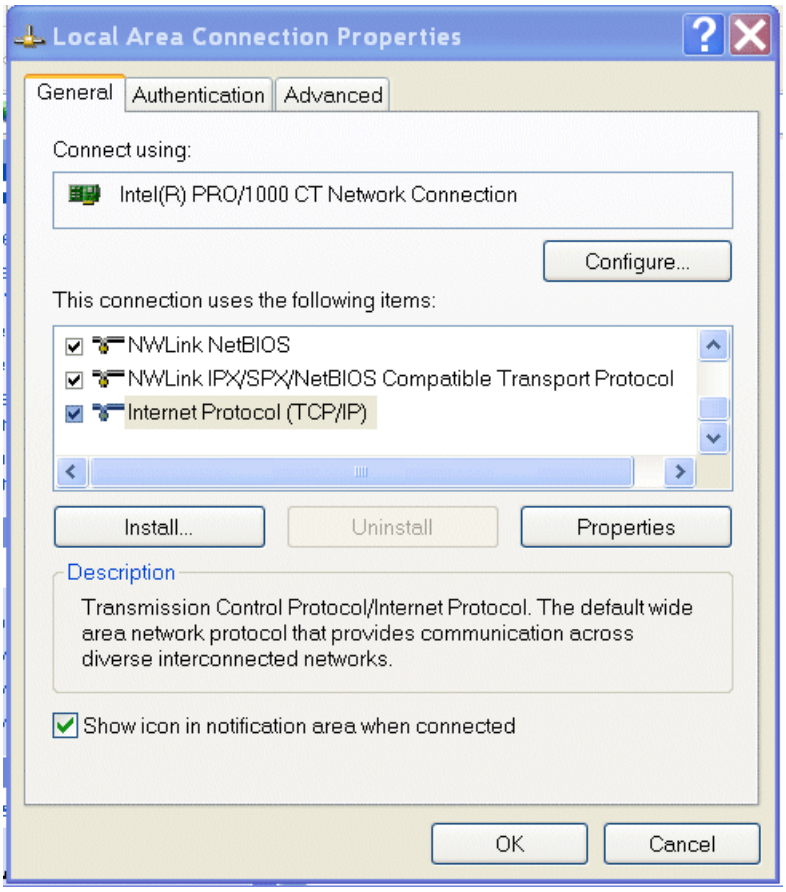

Figure 19 – Local Area Connection Properties

Now you must select “Internet Protocol (TCP/IP)” and click on the Properties button to be brought to figure 20. Lastly you must disable any firewall software you have running. If you are running a proxy server for Internet access, you must also disable the proxy client. Disabling this also requires a reboot.

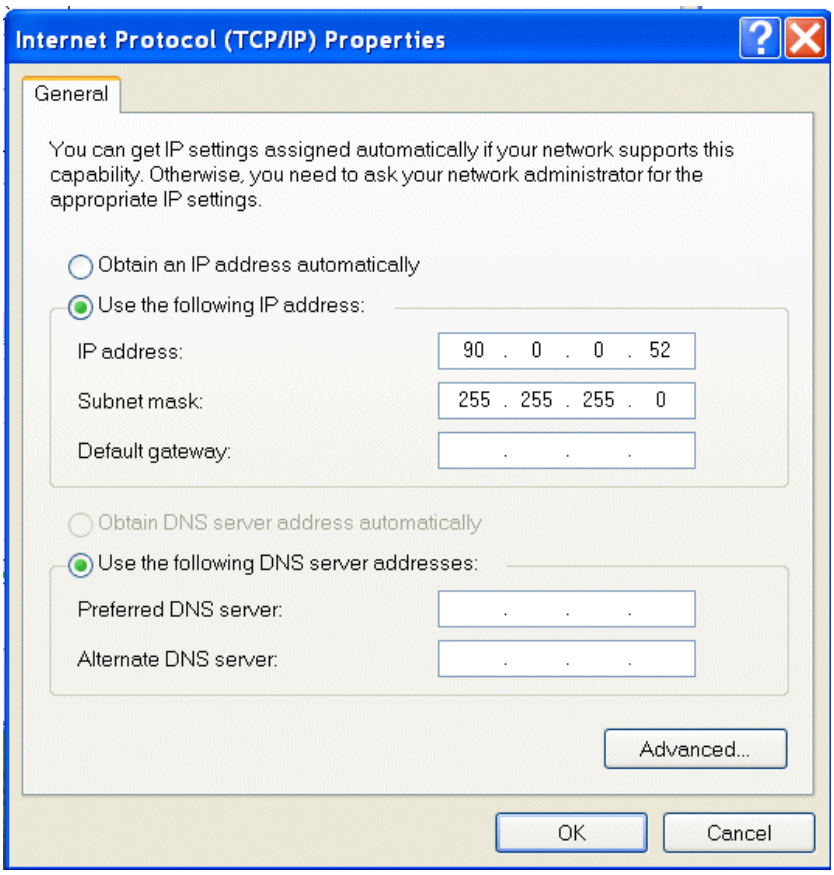

Figure 20 – TCP/IP Properties

4.2.3.2 Testing a Direct Connection

You can use the program "Ping" to test a network connection between the computer and the SLM. "Ping" is a command line tool so we will need to bring up a command prompt. Under Windows NT, 2000 and XP the name of this command is "CMD". Under Windows 98 the name of this command is "Command".

To do this, click on Start->Run->Cmd

Then on the command line type

Ping <IP Address>

For example

Ping 192.168.1.4

If the SLM is found at the specified IP address, the Ping command will respond with a report that is similar to:

Pinging 192.168.1.4 with 32 bytes of data:

Reply from 192.168.1.4: bytes=32 time<1ms TTL=64

Reply from 192.168.1.4: bytes=32 time<1ms TTL=64

Reply from 192.168.1.4: bytes=32 time<1ms TTL=64

Reply from 192.168.1.4: bytes=32 time<1ms TTL=64

Ping statistics for 192.168.1.4:

Packets: Sent = 4, Received = 4, Lost = 0 (0% loss),

Approximate round trip times in milli-seconds:

Minimum = 0ms, Maximum = 0ms, Average = 0ms

4.2.4 Configuring the SLM For a Local Area Network (LAN)

If you have chosen to place the SLM onto your local area network you will need:

- A CAT5 network patch cable to physically connect the SLM to the LAN
- A static IP address to assign to the SLM.

Remember that even if the IP address you have selected is in general a valid IP address it needs to be valid for your LAN (local area network). Otherwise the device will not be accessible from an Internet browser or Ping.

4.2.4.1 Configuring the Network Settings from the Monitor and Configure Applet

The network settings are configurable from the Network Settings tab, refer to figure 21.

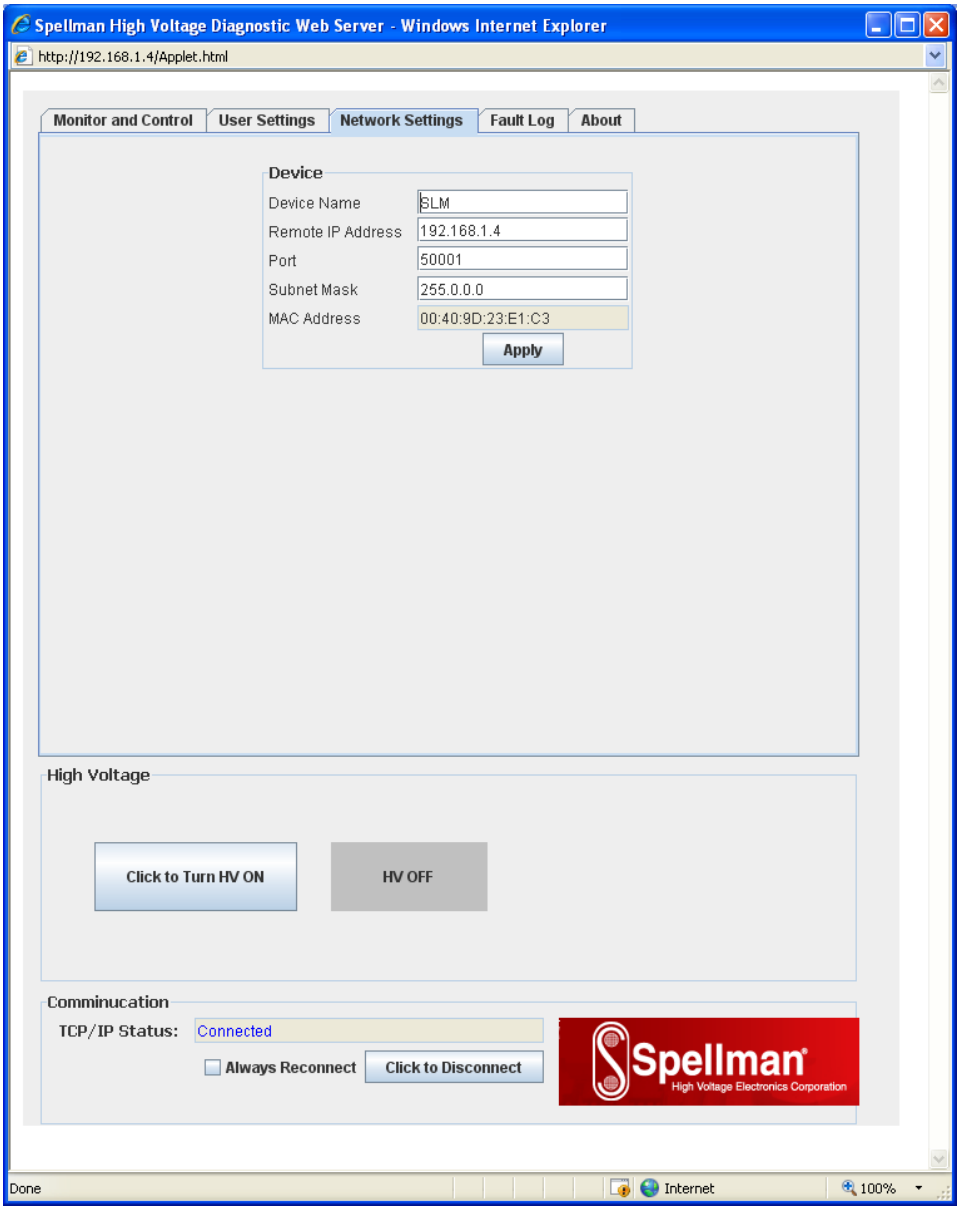

Figure 21 - Configure Network Settings

The settings that can be changed are the:

- Device Name
- IP Address
- TCP Port
- Subnet Mask

Once the Apply button is clicked on the network settings screen, the network component of the SLM is configured, rebooted and the applet is disconnected from the SLM. You must type the NEW IP address into a web browser to bring up a new instance of the applet to monitor and control the SLM after reconfiguring it. This may also

require reconfiguring the host computer with the correct host IP address, subnet mask, and TCP port.

The device name does not affect the operation of the SLM; it is simply a way for the user to differentiate multiple units on the same network.

Depending on the type of network you are attaching the SLM to, you may need to configure the host PC's IP address and subnet mask as shown in section 4.2.3.1. You can also test a network connection to the SLM by following the instructions listed in section 4.2.3.2 .

4.2.5 Enabling Communications Objects in Visual Basic for Ethernet Communications

For Ethernet communications, we need Microsoft Winsock Control 6.0 and SP5. To enable this in your VB 6 project, go to:

Project -> Components

Once selected in your toolbox, you will have an icon of two computers linked together and will be named: Winsock. This can be dragged and dropped into your application. Then set the object's properties.

4.2.6 Configuring Communications in Visual Basic for Ethernet

In order to configure the Winsock Object, you must make the following initialization in the object's properties:

Protocol	0 – sckTCPProtocol

Then, in the application code, include the following commands:

```
tcpClient.RemoteHost = host
tcpClient.RemotePort = portNumber
tcpClient.Connect
```

For further information regarding the use of the above commands, please refer to your Visual Studio Help File.

4.2.6.1 Data Output Example

MSComm1 is both the serial and USB port. TcpClient is the Ethernet port.

```
If (portType = "ethernet") Then
        tcpClient.SendData (str)
Else
        MSComm1.InBufferCount = 0
         On Error GoTo done
        MSComm1.Output = str
        done:
        tmrOpenClose.Enabled = True
End If
```

4.2.6.2 Data Input Example

```
If (portType = "ethernet") Then
        Do
                DoEvents
.....................................................................................................
.....................................................................ttcpClient.GetData temp$
                str = str + temp$
                Loop Until InStr(str, Chr(3)) Or Timer - t1 > 1
                On Error Resume Next
Else
        Do
                DoEvents
                If MSComm1.InBufferCount > 0 Then
                        str = str & MSComm1.Input
                End If
                Loop Until InStr(str, Chr(3)) Or Timer - t1 > 1
                If InStr(str, Chr(3)) > 0 Then
                        tmrOpenClose.Enabled = False
                End If
End If
```

4.3 USB

The USB interface makes use of a standard ‘command/response’ communications protocol. See section 6.0 for the syntax of the serial interface protocol.

The USB interface is accessed through a Windows USB Human Interface driver (HID).

4.3.1 USB Driver Installation

The HID driver is a Windows driver installed with the operating system. To determine if the driver had been acquired open the System properties window selecting the Control Panel System Properties.

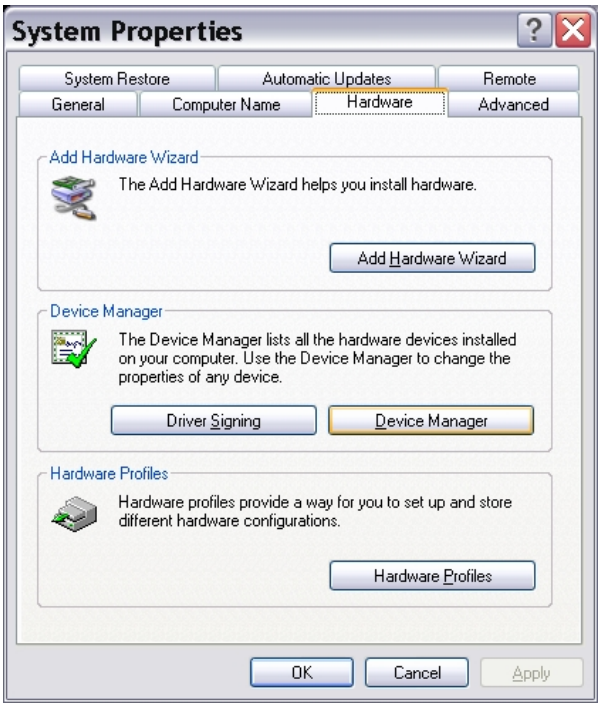

Figure 22 – System Properties

Then select Device Manager and expand the Human Interface Devices. View the properties of the USB Human Interface Device icon and verify that Spellman USB HID appears in the Location section.

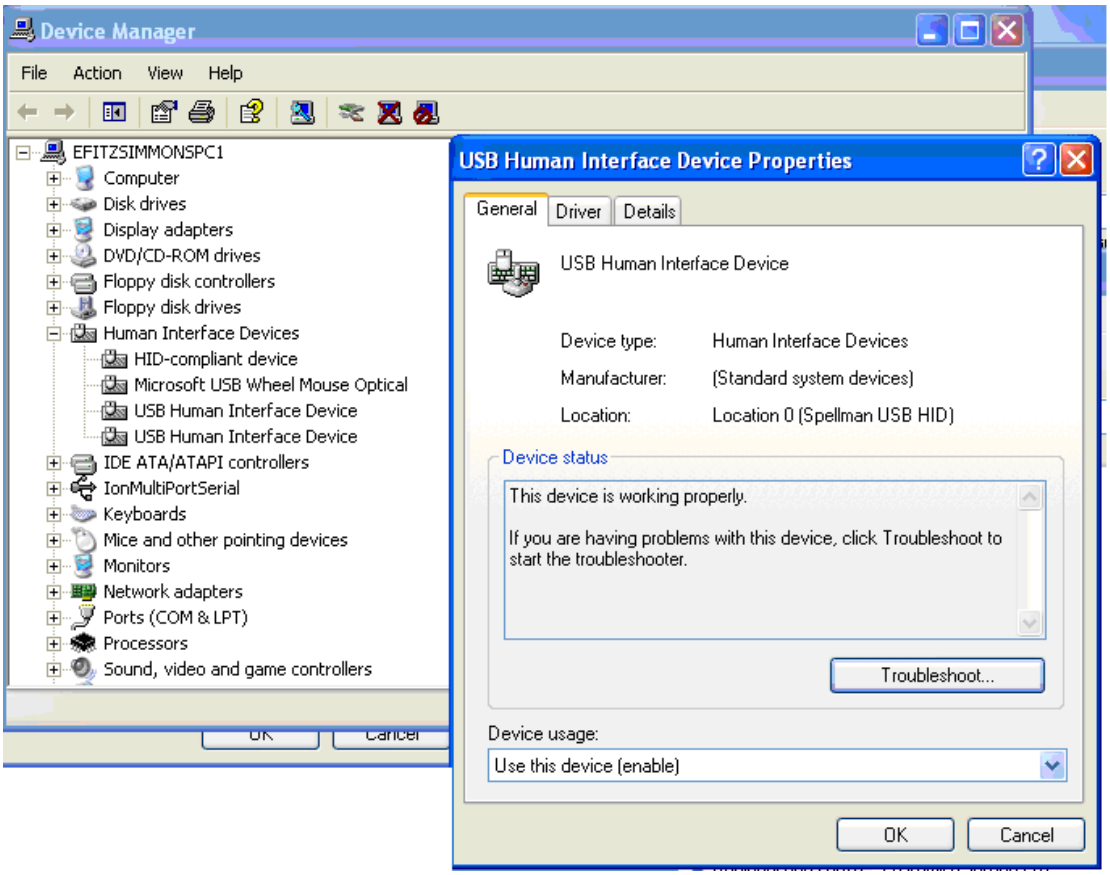

Figure 23 – Device Manager showing USB HID

4.3.2 USB and EMI

The USB protocol utilizes a heartbeat signal from each client device back to the host (PC). If the heartbeat is interrupted due to radiated or conducted transient noise, it is possible that the host may lose connection with the client. This can cause problems with data transfers over the USB cable.

The DXM when used in combination with the HID Windows driver makes it possible for the host to renumerate the client connection and reestablish communications. This is providing the control application implements a method of timeout and retry.

NOTE: If an EMI disruption occurrs the DXM will continue to renumerate until a connection with the GUI is re-established.

4.3.3 Enabling Communications Objects in Visual Basic for USB

The dynamic link library USB_dll.dll will be provided which needs to be added to the project. The library has three functions that can be called from the VB code.

The three functions are:

- FindTheHid – finds the connection with the correct VID, PID and Serial Number
- WriteReport(str) – Writes a string to the connected HID interface
- ReadReport() – Returns a string from the connected HID interface

4.3.4 Configuring Communications in Visual Basic for USB

To use the USB_dll.dll in VB the following statements are needed.

```
Dim usb As usbDll
Dim MyDeviceDetected As Boolean

Set usb = New usbDll
```

Using this statement determines whether a connection is present.

```
MyDeviceDetected = usb.FindTheHid
```

If MyDeviceDetected is true then the connection is present.

4.3.5 Software Considerations for USB Reconnection

The following Visual Basic code snippets are presented as a guideline for implementation with revision C and higher assemblies.

4.3.5.1 Recognize partial, corrupt, or absent data

```
1:  temp2$ = inputInputString
2:  If temp2$ <> "" Then
3:      btn_UPDATEDATA.Value = False
4:      CommStatusFlag = True
5:      CommaPos = InStr(Start, temp2$, Comma, vbTextCompare)
6:      ' Channel 0
7:      On Error GoTo endhere
8:      AmbTemp = Mid(temp2$, Start, (CommaPos - Start))
```

Please note that even though we have guarded against no data, in line 2, we still need to guard against bad data, in this case no comma, on line 8. If there is no comma, we wind up passing a negative value to Mid, which is an error, that we should trap for.

4.3.5.2 Retrieve data only if it exists

```
1:  Do
2:      DoEvents
3:      If MSComm1.InBufferCount > 0 Then
4:              str = str & MSComm1.Input
5:      End If
6:      Loop Until InStr(str, Chr(3)) Or Timer - t1 > 1
7:      'str = str & MSComm1.Input
8:      If InStr(str, Chr(3)) > 0 Then
9:              tmrOpenClose.Enabled = False
10:     End If
```

Notice that in line 3 we check for the existence of data before we extract data from the USB port. Normally, if there is no data, line 4 would append an empty string. However, during a noise event, retrieving data without first checking the existence of data could hang.

4.3.5.3 Example Output Routine

Notice that on line 13 we register an error handler in case the port is invalid because we have closed it in another routine. Notice that on line 16 we start a timer. When we output data on the port we start a timer to keep track of incoming data. If we get no incoming data it means that communications have been interrupted.

```
1: Private Sub outputOutputString(outputString As String)
2:   Dim str As String
3:   str = ProcessOutputString(outputString)
4:    StatusBar1.Panels(4).Text = "TX: " & str
5:    'StatusBar1.Panels(3).Text = "RX: Waiting"
6:    If (portType = "ethernet") Then
7:     tcpClient.SendData (str)
8:    ElseIf (portType = "USB") Then
9:       usb.WriteReport (str)
10:    Else
11:        MSComm1.InBufferCount = 0
12:
13:   On Error GoTo done
14:        MSComm1.Output = str
15: done:
16:       tmrOpenClose.Enabled = True
17:    End If
18: End Sub
```

4.3.5.4 Example Input Routine

Notice on line 26 we check for data first before extracting data from the input. Then if we have actual data we turn off the timer. Otherwise the timer routine toggles the port open/close.

```
1: Private Function inputInputString() As String
2:    Dim str As String
3:    Dim t1 As Single
4:   Dim temp$

5:     Dim stra As String
6:     Dim stri(300) As String

7:    t1 = Timer
8:
9:   If (portType = "ethernet") Then
10:        Do
11:            DoEvents
12:            tcpClient.GetData temp$
13:            str = str + temp$
14:       Loop Until InStr(str, Chr(3)) Or Timer - t1 > 1
15:       On Error Resume Next

16:    ElseIf (portType = "USB") Then
17:       Do
18:            DoEvents
19:          stra = usb.ReadReport
20:          str = str & stra
21:           'str = str & ReadReport
22:       Loop Until InStr(str, Asc(3)) Or Timer - t1 > 0.09

23:    Else
24:       Do
25:            DoEvents
26:           If MSComm1.InBufferCount > 0 Then
27:                str = str & MSComm1.Input
28:           End If
29:        Loop Until InStr(str, Chr(3)) Or Timer - t1 > 1
30:
31:        If InStr(str, Chr(3)) > 0 Then
32:            tmrOpenClose.Enabled = False
33:       End If
34:
35:        frm_EXTRAS.txt_MSCOMMBUFF.Text = str
36:        tmr_COMMWDT.Enabled = True
37:        On Error Resume Next
```

```
38:    End If
39:    StatusBar1.Panels(3).Text = "RX: " & str
40:   inputInputString = str
41:    tmr_RCVTIMER.Enabled = True
42: End Function
```

4.3.5.5 Example Timer Routine: Toggle Port State

This is the timer routine in which the open/closed state of the port is toggled. If communications are interrupted, the USB device will re-register itself with the OS (vendor term: renumeration). Once this happens, re-opening the port will enable communications. Until the re-registration happens, open operations will fail. Notice line 5 where we register an error handler.

```
1:Private Sub tmrOpenClose_Timer()
2:   If MSComm1.PortOpen = True Then
3:
4:        MSComm1.PortOpen = False
5:        On Error GoTo done
6:       MSComm1.PortOpen = True
7: done:
8:       tmrOpenClose.Enabled = False
9:    End If
10:
11: End Sub
```

4.3.5.6 Example Timer Routine: Port Reconnection

This is another timer routine whose purpose is to turn the port on if it is off. Notice that in line 8 an error handler is called because if the device has not re-registered itself with the OS, an error will be raised.

```
1: Private Sub tmr_COMMWDT_Timer()
2:
3: tmr_COMMWDT.Enabled = False
4:
5: If CommStatusFlag = True Then
6:
7:    If MSComm1.PortOpen = False Then
8:        On Error GoTo done
9:        MSComm1.PortOpen = True
10: done:
11:   End If
12:
13: ElseIf CommStatusFlag = False Then
14:
```

```
15:    If MSComm1.PortOpen = False Then
16:
17:        MSComm1.PortOpen = True
18:    Else
19:        MSComm1.PortOpen = False
20:    End If
21:
22: End If
```

4.3.5.7 Data Parsing Example

Here we have an example of a code that parses incoming data. Notice that it makes use of our generic input and output routines. The important consideration is to gracefully handle corrupted input data after a noise event. In this case we may get data, so a test against empty string returns false, but we may not get commas in the correct place. Notice that we register an error handler on line 26 so that the mid function, which would raise an error when given a negative number, is handled.

```
1: Private Sub btn_EMI_Click()
2:   Dim temp2$
3:    Dim Response1$
4:    Dim Response2$
5:    Dim number$
6:    Dim Comma
7:    Dim CommaPos
8:    Dim Start
9:    Dim ODATA$
10:
11: Comma = ","
12: Start = 5
13:
14: If tmr_RCVTIMER.Enabled = True Then
tmr_RCVTIMER.Enabled = False
15: If tmr_NETRCVTMR.Enabled = True Then
tmr_NETRCVTMR.Enabled = False
16:
17: If AutoUpdate = True Then
18:    tmr_UPDATE.Enabled = False
19: End If
20:
21:    number$ = "15,"
22:    outputOutputString (number$)
23:
24:    temp2$ = inputInputString
25:    CommaPos = InStr(Start, temp2$, Comma, vbTextCompare)
```

```
26:     On Error GoTo endhere
27:    Response1$ = Mid(temp2$, Start, (CommaPos - Start))
28:
29:    'With a 5v reference:
30:    ODATA$ = Format(str(Response1$ * 0.0004884), "0.##0")
31:
32:   txt_DACB.Text = ODATA$ + " mA"
33:    frm_RAWDATA.txt_RAWDACB.Text = str(Response1$)
34:    txt_DACB.BackColor = vbWhite
35:    CommStatusFlag = True
36: endhere:
37:
38: If portType = "ethernet" Then
39:   tmr_NETRCVTMR.Enabled = True
40: Else
41:    tmr_RCVTIMER.Enabled = True
42: End If
43:
44: If AutoUpdate = True Then tmr_UPDATE.Enabled = True
46: End Sub
```

5.0 ETHERNET COMMANDS

5.1 TCP/IP FORMAT

Each Ethernet command will consist of a TCP/IP header followed by the required data bytes. Figure 27 summarizes the TCP/IP header configuration. Please note that this functionality is provided by the software implementation of the Open Systems Interconnection (OSI) TCP/IP protocol stack, specifically the upper 4 layers.

Byte				
0	Protocol Version	Header Length	Type Of Service	Total Length
4	Packet ID		Flags	Fragmentation Offset
8	Time To Live	Protocol	Header checksum	
12	Source Address			
16	Destination Address			
20	Source Port		Destination Port	
24	Sequence Number			
28	Acknowledgement Number			
32	Data Offset	Reserved	Code Bits	Window
36	Checksum		Urgent Pointer	
40	Data Byte 1	Data Byte 2	Data Byte 3	Data Byte N

Figure 24: Network TCP/IP datagram header

The format of Data Bytes 1 through N are as follows:

<STX><CMD><,>ARG><,><ETX>

Where:
<STX> = 1 ASCII 0x02 Start of Text character
<CMD> = 2 ASCII characters representing the command ID
<,> = 1 ASCII 0x2C character
<ARG> = Command Argument
<,> = 1 ASCII 0x2C character
<ETX> = 1 ASCII 0x03 End of Text character

5.2 COMMAND ARGUMENTS

The format of the numbers is a variable length string. To represent the number 42, the string ‘42’, ‘042’, or ‘0042’ can be used. This being the case, commands and responses that carry data are variable in length.

5.3 COMMAND OVERVIEW

Data Byte section of the TCP/IP Datagram			
Command Name	<CMD>	<ARG>	RANGE
Program RS-232 unit baud rate	07	1 ASCII	1 - 5
Program User Configs	09	9 ASCII	See Description
Program kV	10	1-4 ASCII	0-4095
Program mA	11	1-4 ASCII	0-4095
Request kV Setpoint	14	None	-
Request mA Setpoint	15	None	-
Request Analog Monitor Readbacks	19	None	-
Request HV On Hours Counter	21	None	-
Request Status	22	None	-
Request Software Version	23	None	-
Request Hardware Version	24	None	-
Request Web Server Version	25	None	-
Request Model Number	26	None	-

Request User Configs	27	None	
Request unit Scaling	28	None	
Reset HV On Hours Counter	30	None	-
Reset Faults	31	None	-
Request Network Settings	50	None	-
Program Network Settings	51	6 ASCII	See Description
Read Interlock Status	55	1 ASCII	0 or 1
Request kV monitor	60	None	-
Request mA monitor	61	None	-
Request –15V LVPS	65	None	-
Watchdog Tickle	88	None	-
Watchdog enable	89	1 ASCII	0 or 1
Turn HV on/off	98	1 ASCII	0 or 1
Program Local/Remote Mode	99	1 ASCII	0 or 1

5.4 RESPONSE OVERVIEW

The command responses will follow the same network TCP/IP header format as outlined above in section 5.1. This list is comprised of Commands with complex responses only. Commands using a simple response will use the <$> character (ASCII 0x24) as a “Success” response or a single character error code. These will be seven ASCII characters in length.

Response Name	<CMD>	Response
Request kV Setpoint	14	7-10 ASCII
Request mA Setpoint	15	7-10 ASCII
Request Analog Monitor Readbacks	19	11-22 ASCII
Request Total Hours High Voltage On	21	13 ASCII
Request Status	22	12 ASCII
Request DSP Software Version	23	17 ASCII
Request Hardware Version	24	9 ASCII
Request Web Server Version	25	17 ASCII
Request Model number	26	11 ASCII
Request User Configs	27	8-16 ASCII
Request unit Scaling	28	23-31 ASCII
Request Network Settings	50	48-104 ASCII
Read Interlock Status	55	7 ASCII
Request kV monitor	60	7-10 ASCII
Request mA monitor	61	7-10 ASCII
Request –15V LVPS	65	7-10 ASCII
Request Faults	68	19 ASCII

5.5 COMMAND STRUCTURE

5.5.1 Program kV

Description:
The host requests that the firmware change the setpoint of kV.

Direction:
Host to supply

Syntax:
<STX><10><,><ARG><,><ETX>

Where:
<ARG> = 0 - 4095 in ASCII format

Example:
<STX>10,4095,<ETX>

Response:
<STX><10><,><$><,><ETX>
<STX><10><,><ARG><,><ETX>

where <ARG> = error code

Error Codes TBD, 1 = out of range

5.5.2 Program mA

Description:
The host requests that the firmware change the setpoint of mA.

Direction:
Host to supply

Syntax:
<STX><11><,><ARG><,><ETX>

Where:
<ARG> = 0 - 4095 in ASCII format

Example:
<STX>11,4095,<ETX>

Response:
<STX><11><,><$><,><ETX>
<STX><11><,><ARG><,><ETX>

where <ARG> = error code

Error Codes TBD, 1 = out of range

5.5.3 Request Total Hours High Voltage On

Description:
The host requests that the firmware sends the present value of the Total Hours High Voltage On.

Direction:
Host to supply

Syntax:
<STX><21><,><ETX>

Example:
<STX>21,<ETX>

Response:
<STX><21><,><ARG1>< ARG2>< ARG3><ARG4><ARG5>
<.><ARG6>><,><ETX>

Where:
<.> = ASCII 0x2E
ARGx =0-9 in ASCII format

Example:
<STX>21,99999.9,<ETX>

5.5.4 Request Status

Description:
The host requests that the firmware sends the power supply status.

Direction:
Host to supply

Syntax:
<STX><22><,><ETX>

Example:
<STX>22,<ETX>

Response:
<STX><22><,><ARG1><,><ARG2><,><ARG3><,><ARG4><,><ARG5><,
><ARG6><,><ARG7><,><ARG8><,<ETX>

Where:
<ARG1> 1 = HvOn, 0 = HvOff
<ARG2> 1 = Interlock 1 Open, 0 = Interlock 1 Closed
<ARG3> 1 = Fault Condition, 0 = No Fault
<ARG4> 1 = Remote Mode, 0 = Local Mode
<ARG5> 1 = I Mode on, 0 = = I Mode off
<ARG6> 1 = ROV Enabled, 0 = ROV Disabled
<ARG7> 1 = AOL Enabled, 0 = AOL Disabled
<ARG8> 1 = Watchdog Enabled, 0 = Watchdog Disabled
Example:
<STX>22,1,1,0,0,0,0,0,0,<ETX>

5.5.5 Request DSP Software Part Number/Version

Description:
The host requests that the firmware sends the DSP firmware version.

Direction:
Host to supply

Syntax:
<STX><23><,><ETX>

Example:
<STX>23,<STX>

Response:
<STX><23><,>< ARG><,><ETX>

Where:
<ARG> consists of eleven ASCII characters representing the current firmware part number/version. The format is SWM9999-999

Example:
<STX>23,SWM9999-999,<ETX>

5.5.6 Request Hardware Version

Description:
The host requests that the firmware sends the hardware version.

Direction:
Host to supply

Syntax:
<STX><24><,><ETX>

Example:
<STX>24,<ETX>

Response:
<STX><24><,>< ARG><,><ETX>

Where:
<ARG> consists of 3 ASCII characters representing the hardware version. The format is ANN, where A is an alpha character and N is a numeric character

Example:
<STX>24,A01,<ETX>

5.5.7 Request Webserver Software Part Number/Version

Description:
The host requests that the firmware sends the Web Server firmware part number/version.

Direction:
Host to supply

Syntax:
<STX><25><,><ETX>

Example:
<STX>25,<ETX>

Response:
<STX><25><,><ARG><,><ETX>

Where:
<ARG> consists of eleven ASCII characters representing the current firmware part number/version. The format is SWM9999-999

Example:
<STX>25,SWM9999-999,<ETX>

5.5.8 Request Model Number

Description:
The host requests that the firmware sends the unit model number

Direction:
Host to supply

Syntax:
<STX><26><,><ETX>

Example:
<STX>26,<ETX>

Response:
<STX><26><,><ARG><,><ETX>

Where:
<ARG> consists of five ASCII characters representing the model number. The format is SLMNNANNN or XNNNN, where N is a numeric character and where A is a letter character.

Example:
<STX>25,SLM70P600,<ETX> or <STX>25,X9999,<ETX>

5.5.9 Reset Run Hours

Description:
The host requests that the firmware resets the run hour counter.

Direction:
Host to supply

Syntax:
<STX><30><,><ETX>

Example:
<STX>30,<ETX>

Response:
<STX><30><,><$><,><ETX>

5.5.10 Reset Faults

Description:
The host requests that the firmware resets all Fault messages and indicators.

Direction:
Host to supply

Syntax:
<STX><31><,><ETX>

Example:
<STX>31,<ETX>

Response:
<STX><31><,><$><,><ETX>

5.5.11 Request Network Settings

Description:
The host requests that the firmware transmits the network settings

Application:

	ARG 1	ARG2	ARG3	ARG4	ARG5
Function	Device Name	Remote Address	Remote Port	Subnet Mask	MAC Address

Direction:
Host to supply

Syntax:
<STX><50><,><ETX>

Example:
<STX>50,<ETX>

Response:
<STX><50><,><ARG1><,><ARG2><,><ARG3><,><ARG4><,>
<ARG5><,><,><ETX>

Arguments:
Device Name is limited to 20 characters or less. Remote address is a ip address in dotted notation. Remote port is a decimal number. Subnet Mask and Default Gateway are also dotted notation and MAC address is in MAC Address notation.

ARG1:	Device Name	1 character minimum, up to 20 maximum
ARG2:	IP Address	<nnn><.><nnn><.><nnn><.><nnn>, where <nnn> represents a number from 0 to 255.
ARG3:	Remote Port	5001 or from 49152 to 65535.
ARG4:	Subnet Mask	<xxx><.><xxx><.><xxx><.><xxx>, where <xxx> represents a number from 0 to 255.
ARG5:	MACAddress	<zzz><:><zzz><:><zzz><:><zzz><:><zzz><:><zzz> , where <zzz> represents a number from 0 to 255.

Example:
<STX>50,Spellman2.0,32.78.110.37,1026,255.0.0.0,0:100:33:1:32:84,<ETX>

5.5.12 Program Network Settings

Description:
The host requests that the firmware programs the network settings and then reboots.

Application:

	ARG 1	ARG2	ARG3	ARG4	ARG5
Function	Device Name	Remote Address	Remote Port	Subnet Mask	MAC Address

Direction:
Host to supply

Syntax:
<STX><51><,><ARG1><,><ARG2><,><ARG3><,><ARG4><,><ARG5><,><ARG6><,><ETX>

Arguments:
Device Name is limited to 20 characters or less. Remote address is a ip address in dotted notation. Remote port is a decimal number. Subnet Mask and Default Gateway are also dotted notation and MAC address is in MAC Address notation.

ARG1:	Device Name	1 character minimum, up to 20 maximum
ARG2:	IP Address	<nnn><.><nnn><.><nnn><.><nnn>, where <nnn> represents a number from 0 to 255.
ARG3:	Remote Port	5001 or from 49152 to 65535.
ARG4:	Subnet Mask	<xxx><.><xxx><.><xxx><.><xxx>, where <xxx> represents a number from 0 to 255.
ARG5:	MACAddress	<zzz><:><zzz><:><zzz><:><zzz><:><zzz><:><zzz> , where <zzz> represents a number from 0 to 255.

Example:
<STX>51,Spellman2.0,32.78.110.37,1026,255.0.0.0,0:100:33:1:32:84,<ETX>

Response:
None, as Embedded server reboots with new settings.

5.5.13 Read Interlock Status

Description:
The host requests that the firmware read the status of the interlock channel.

Direction:
Host to supply

Syntax:
<STX><55><,><ETX>

Response:
<STX><55><,><ARG1><,><ETX>
Where ARG1 is Interlocks 1. A 1 indicates that the Interlock is energized

Example:
<STX>55,1,<ETX>

5.5.14 Request kV Monitor

Description:
The host requests that the firmware report kV monitor.

Direction:
Host to supply

Syntax:
<STX><60><,><ETX>

Response:
<STX><60><,><ARG><,><ETX>

Where:
<ARG>=0-4095 in ASCII format representing unscaled value.

Example:
<STX>60,4095,<ETX>

5.5.15 Request mA Monitor

Description:
The host requests that the firmware report mA monitor.

Direction:
Host to supply

Syntax:
<STX><61><,><ETX>

Response:
<STX><61><,><ARG><,><ETX>

Where:
<ARG>=0-4095 in ASCII format representing unscaled value.

Example:
<STX>61,4095,<ETX>

5.5.16 Request –15V LVPS

Description:
The host requests that the firmware report –15V LVPS.

Direction:
Host to supply

Syntax:
<STX><65><,><ETX>

Response:
<STX><65><,><ARG><,><ETX>

Where:
<ARG>=0-4095 in ASCII format representing unscaled value.

Example:
<STX>65,4095,<ETX>

5.5.17 Request Faults

Description:
The host requests that the firmware report Faults.

Direction:
Host to supply

Syntax:
<STX><68><,><ETX>

Response:
<STX><68><,><ARG1><,><ARG2><,><ARG3><,><ARG4><,><ARG5><,><ARG6><,><ARG7><,><ETX>

Where:
<ARGx> 1 = Fault, 0 = No Fault in ASCII format

ARG1 = ARC
ARG2 = Over Temperature
ARG3 = Over Voltage
ARG4 = Under Voltage
ARG5 = Over Current
ARG6 = Under Current
ARG7 = Watchdog

Example:
<STX>68,0,0,0,0,1,0,0,<ETX>

5.5.18 Turn HV on/off

Description:
The host requests that the firmware turn high voltage on or high voltage off.

Direction:
Host to supply

Syntax:
<STX><98><,><ARG><,><ETX>

Where:
<ARG> 1 = HV on, 0 = HV off in ASCII format

Example:
<STX>98,1,<ETX>

Response:
<STX><98><,><$><,><ETX>
<STX><98><,><ARG><,><ETX>

where <ARG> = error code

Error Codes TBD,
1 = out of range

5.5.19 Program Local/Remote Mode

Description:
The host requests that the firmware to switch between Local and Remote Mode.

Direction:
Host to supply

Syntax:
<STX><99><,><ARG><,><ETX>

Where:
<ARG> 1 = Remote, 0 = Local in ASCII format

Example:
<STX>99,1,<ETX>

Response:
<STX><99><,><$><,><ETX>
<STX><99><,><ARG><,><ETX>

where <ARG> = error code

Error Codes TBD,
1 = out of range

5.5.20 Program RS-232 Baud rate

Description:
The host requests that the firmware change the Baud rate for RS-232.

Direction:
Host to supply

Syntax:
<STX><07><,><ARG><,><ETX>

Where:
<ARG> 1 = 9.6k in ASCII format
<ARG> 2 = 19.2k in ASCII format
<ARG> 3 = 38.4k in ASCII format
<ARG> 4 = 57.6k in ASCII format
<ARG> 5 = 15.2k in ASCII format

Example:
<STX>07,1,<ETX>

Response:
<STX><07><,><$><,><ETX>
<STX><07><,><ARG><,><ETX>

where <ARG> = error code

Error Codes TBD,
1 = out of range

5.5.22 Program User Configs

Description:
The host requests that the firmware program the user configs.

Direction:
Host to supply

Syntax:
<STX><09><,><ARG1><,><ARG2><,><ARG3><,><ARG4><,><ARG5><,><ARG6><,><ARG7><,><ARG8><,><ARG9><,><ETX>

Where:
<ARG1> = 1 = ROV enabled, 0 = ROV disabled in ASCII format.
<ARG2> = 0-110 in ASCII format representing the overvoltage percentage.
<ARG3> = 1-600 in ASCII format representing the ramp rate in seconds from .1 to 60sec.
<ARG4> = 1 = AOL enabled, 0 = AOL disabled in ASCII format.value.
<ARG5> = 0-20 in ASCII format representing the arc count.
<ARG6> = 0-60 in ASCII format representing the arc period in seconds.
<ARG7> = 0-500 in ASCII format representing the arc quench time in milli-seconds.
<ARG8> = 1 = ARC re-ramp enabled, 0 = ARC re-ramp disabled in ASCII format.
<ARG9> = 1 = No Arc detect, 0 = Arc detect in ASCII format.

Example:
<STX>09,1,50,100,0,10,30,250,1,0,<ETX>

Response:
<STX><09><,><$><,><ETX>
<STX><09><,><ARG><,><ETX>

where <ARG> = error code

Error Codes
1 in ASCII format = Invalid Arc Rate warning message:
An invalid arc rate(Time period/Arc Count) of more than 1 arc per second has been entered,these values along with the other variables in the command string have been disregarded by the HVPS.

2 in ASCII format = NAD Enabled warning message:
The **N**ot **A**rc **D**etect mode has been enabled. In this mode the HVPS has no Arc shutdown protection. The HVPS is designed to handle 1 arc per second. Exceeding 1 arc per second could cause damage to the HVPS.**HVPS failure caused by excessive arcing will not be covered under the warranty**.

5.5.23 Request unit Scaling

Description:
The host requests that the firmware report the unit scaling.

Direction:
Host to supply

Syntax:
<STX><28><,><ETX>

Example:
<STX>28,<ETX>

Response:
<STX><28><,>< ARG1><,>< ARG2><,><ETX>

Where:
<ARG1> =0-65535 in ASCII format representing the voltage full-scale value.
<ARG2> =0-65535 in ASCII format representing the current full-scale value.

Example:
<STX>28, 7000, 856<ETX>
Voltage full scale = 70.00kV
Current full scale = 8.56mA

5.5.24 Request User Configs

Description:
The host requests that the firmware report the User Configs.

Direction:
Host to supply

Syntax:
<STX><27><,><ETX>

Example:
<STX>27,<ETX>

Response:
<STX><27><,><ARG1><,><ARG2><,><ARG3><,><ARG4><,><ARG5><,><ARG6><,><ARG7><,><ARG8><,><ARG9><,><ETX>

Where:
<ARG1> = 1 = ROV enabled, 0 = ROV disabled in ASCII format.
<ARG2> = 0-110 in ASCII format representing the overvoltage percentage.
<ARG3> = 1-600 in ASCII format representing the ramp rate in seconds from .1 to 60sec.
<ARG4> = 1 = AOL enabled, 0 = AOL disabled in ASCII format.value.
<ARG5> = 0-20 in ASCII format representing the arc count.
<ARG6> = 0-60 in ASCII format representing the arc period in seconds.
<ARG7> = 0-500 in ASCII format representing the arc quench time in milli-seconds.
<ARG8> = 1 = ARC re-ramp enabled, 0 = ARC re-ramp disabled in ASCII format.
<ARG9> = 1 = No Arc detect, 0 = Arc detect in ASCII format.

Example:
<STX>27,1,50,100,0,10,30,250,1,0,<ETX>

5.5.25 Watchdog Enable

Description:
The host requests that the firmware enable the Communication Watchdog.

Direction:
Host to supply

Syntax:
<STX><89><,><ARG><,><ETX>

Where:
<ARG> 1 = enable, 0 = disable in ASCII format

Example:
<STX>89,1,<ETX>

Response:
<STX><89><,><$><,><ETX>
<STX><89><,><ARG><,><ETX>

where <ARG> = error code

5.5.26 Watchdog Tickle

Description:
The host requests that the firmware resets the Watchdog timer.

Direction:
Host to supply

Syntax:
<STX><88><,><ETX>

Response:
<STX><88><,><$><,><ETX>
<STX><88><,><ARG><,><ETX>

where <ARG> = error code

5.5.27 Request Analog Monitor Readbacks

Description:
The host requests that the firmware transmit the present values of Analog Monitor Readbacks.

Direction:
Host to supply

Syntax:
<STX><19><,><ETX>

Example:
<STX><19>,<ETX>

Response:
<STX><19><,><ARG1><,><ARG2><,><ARG3><,><ETX>

Where:
ARG1 = kV monitor = 0 – 4095
ARG2 = mA monitor = 0 – 4095
ARG3 = unused = 0– 4095

Example:
<STX><19>,4095,4095,4095,<ETX>

6.0 SERIAL COMMANDS – RS-232 / USB

6.1 SERIAL INTERFACE PROTOCOL

Serial communications will use the following protocol:

<STX><CMD><,>ARG><,><CSUM><ETX>

Where:

<STX>	= 1 ASCII 0x02 Start of Text character
<CMD>	= 2 ASCII characters representing the command ID
<,>	= 1 ASCII 0x2C character
<ARG>	= Command Argument
<,>	= 1 ASCII 0x2C character
<CSUM>	= Checksum (see section 6.3 for details)
<ETX>	= 1 ASCII 0x03 End of Text character

6.2 COMMAND ARGUMENTS

The format of the numbers is a variable length string. To represent the number 42, the string ‘42’, ‘042’, or ‘0042’ can be used. This being the case, commands and responses that carry data are variable in length.

6.3 CHECKSUMS

The checksum is computed as follows:

- Add the <CMD>, <,>, and <ARG> bytes into a 16 bit (or larger) word. The bytes are added as unsigned integers.
- Take the 2’s compliment (negate it).
- Truncate the result down to the eight least significant bits.
- Clear the most significant bit (bit 7) of the resultant byte, (bitwise AND with 0x7F).
- Set the next most significant bit (bit 6) of the resultant byte (bitwise OR with 0x40).

Using this method, the checksum is always a number between 0x40 and 0x7F. The checksum can never be confused with the <STX> or <ETX> control characters, since these have non-overlapping ASCII values.

If the DSP detects a checksum error, the received message is ignored – no acknowledge or data is sent back to the host. A timeout will act as an implied NACK.

The following is sample code, written in Visual Basic, for the generation of checksums:

```
Public Function ProcessOutputString(outputString As String) As String

Dim i As Integer
Dim CSb1 As Integer
Dim CSb2 As Integer
Dim CSb3 As Integer
Dim CSb$
Dim X

X = 0
For i = 1 To (Len(outputString))        'Starting with the CMD character
X = X + Asc(Mid(outputString, i, 1))    'adds ascii values together
Next i

CSb1 = 256 - X
CSb2 = 127 And (CSb1)        'Twos Complement
CSb3 = 64 Or (CSb2)         'OR 0x40
CSb$ = Chr(Val("&H" & (Hex(CSb3))))
ProcessOutputString = Chr(2) & outputString & CSb$ & Chr(3)

End Function
```

6.4 COMMAND OVERVIEW

Data Byte section of the TCP/IP Datagram			
Command Name	<CMD>	<ARG>	RANGE
Program RS-232 unit baud rate	07	1 ASCII	1 - 5
Program User Configs	09	9 ASCII	See Description
Program kV	10	1-4 ASCII	0-4095
Program mA	11	1-4 ASCII	0-4095
Request kV Setpoint	14	None	-
Request mA Setpoint	15	None	-
Request Analog Monitor Readbacks	19	None	-
Request HV On Hours Counter	21	None	-
Request Status	22	None	-
Request Software Version	23	None	-
Request Hardware Version	24	None	-
Request Web Server Version	25	None	-
Request Model Number	26	None	-
Reset HV On Hours Counter	30	None	-
Reset Faults	31	None	-
Read Interlock Status	55	None	-
Request kV monitor	60	None	-
Request mA monitor	61	None	-
Request –15V LVPS	65	None	-
Wathdog Tickle	88	None	-
Wathdog enable	89	1 ASCII	0 or 1
Turn HV on/off	98	1 ASCII	0 or 1

Program Local/Remote Mode	99	1 ASCII	0 or 1

6.5 RESPONSE OVERVIEW

The command responses will follow the same format as outlined above in section 6.1. This list is comprised of Commands with complex responses only. Commands using a simple response will use the <$> character (ASCII 0x24) as a “Success” response or a single character error code. These responses will be eight ASCII characters in length.

Response Name	<CMD>	Response
Request kV Setpoint	14	8-11 ASCII
Request mA Setpoint	15	8-11 ASCII
Request Analog Monitor Readbacks	19	12-23 ASCII
Request Total Hours High Voltage On	21	14 ASCII
Request Status	22	13 ASCII
Request DSP Software Version	23	18 ASCII
Request Hardware Version	24	10 ASCII
Request Web Server Version	25	18 ASCII
Request Model number	26	12 ASCII
Request User Configs	27	9-17 ASCII
Request unit Scaling	28	24-32 ASCII
Read Interlock Status	55	8 ASCII
Request kV monitor	60	8-11 ASCII
Request mA monitor	61	8-11 ASCII
Request –15V LVPS	65	8-11 ASCII

Request Faults	68	20 ASCII

6.6 COMMAND STRUCTURE

6.6.1 Program kV

Description:
The host requests that the firmware change the setpoint of kV.

Direction:
Host to supply

Syntax:
<STX><10><,><ARG><,><CSUM><ETX>

Where:
<ARG> = 0 - 4095 in ASCII format

Example:
<STX>10,4095,<CSUM><ETX>

Response:
<STX><10><,><$><,><CSUM><ETX>
<STX><10><,><ARG><,><CSUM><ETX>

where <ARG> = error code

Error Codes TBD, 1=out of range

6.6.2 Program mA

Description:
The host requests that the firmware change the setpoint of mA.

Direction:
Host to supply

Syntax:
<STX><11><,><ARG><,><CSUM><ETX>

Where:
<ARG> = 0 - 4095 in ASCII format

Example:
<STX>11,4095,<CSUM><ETX>

Response:
<STX><11><,><$><,><CSUM><ETX>
<STX><11><,><ARG><,><CSUM><ETX>

where <ARG> = error code

Error Codes TBD, 1=out of range

6.6.3 Request Total Hours High Voltage On

Description:
The host requests that the firmware sends the present value of the Total Hours High Voltage On.

Direction:
Host to supply

Syntax:
<STX><21><,><CSUM><ETX>

Example:
<STX>21,<CSUM><ETX>

Response:
<STX><21><,><ARG1>< ARG2>< ARG3><ARG4><ARG5>
<.><ARG6>><,><CSUM><ETX>

Where:
<.> = ASCII 0x2E
ARGx = 0 - 9 in ASCII format

Example:
<STX>21,99999.9,<CSUM><ETX>

6.6.4 Request Status

Description:
The host requests that the firmware sends the power supply status.

Direction:
Host to supply

Syntax:
<STX><22><,><CSUM><ETX>

Example:
<STX>22,<CSUM><ETX>

Response:
<STX><22><,><ARG1><,><ARG2><,><ARG3><,><ARG4><,><ARG5><,
><ARG6><,><ARG7><,><ARG8><,><CSUM><ETX>

Where:
<ARG1> 1 = HvOn, 0 = HvOff
<ARG2> 1 = Interlock 1 Open, 0 = Interlock 1 Closed
<ARG3> 1 = Fault Condition, 0 = No Fault
<ARG4> 1 = Remote Mode, 0 = Local Mode
<ARG5> 1 = I Mode on, 0 = = I Mode off
<ARG6> 1 = ROV Enabled, 0 = ROV Disabled
<ARG7> 1 = AOL Enabled, 0 = AOL Disabled
<ARG8> 1 = Watchdog Enabled, 0 = Watchdog Disabled
Example:
<STX>22,1,1,0,0,0,0,0,0,<CSUM><ETX>

6.6.5 Request DSP Software Part Number/Version

Description:
The host requests that the firmware sends the DSP firmware version.

Direction:
Host to supply

Syntax:
<STX><23><,><CSUM><ETX>

Example:
<STX>23,<CSUM><STX>

Response:
<STX><23><,>< ARG><,><CSUM><ETX>

Where:
<ARG> consists of eleven ASCII characters representing the current firmware part number/version. The format is SWM9999-999

Example:
<STX>23,SWM9999-999,<CSUM><ETX>

6.6.6 Request Hardware Version

Description:
The host requests that the firmware sends the hardware version.

Direction:
Host to supply

Syntax:
<STX><24><,><CSUM><ETX>

Example:
<STX>24,<CSUM><ETX>

Response:
<STX><24><,>< ARG><,><CSUM><ETX>

Where:
<ARG> consists of 3 ASCII characters representing the hardware version. The format is ANN, where A is an alpha character and N is a numeric character

Example:
<STX>24,A01,<CSUM><ETX>

6.6.7 Request Webserver Software Part Number/Version

Description:
The host requests that the firmware sends the Web Server firmware part number/version.

Direction:
Host to supply

Syntax:
<STX><25><,><CSUM><ETX>

Example:
<STX>25,<CSUM><ETX>

Response:
<STX><25><,><ARG><,><CSUM><ETX>

Where:
<ARG> consists of eleven ASCII characters representing the current firmware part number/version. The format is SWM9999-999

Example:
<STX>25,SWM9999-999,<CSUM><ETX>

6.6.8 Request Model Number

Description:
The host requests that the firmware sends the unit model number

Direction:
Host to supply

Syntax:
<STX><26><,><CSUM><ETX>

Example:
<STX>26,<CSUM><ETX>

Response:
<STX><26><,><ARG><,><CSUM><ETX>

Where:
<ARG> consists of five ASCII characters representing the model number. The format is SLMNNANNN or XNNNN, where N is a numeric character and where A is a letter character.

Example:
<STX>25,X9999,<CSUM><ETX>
or
<STX>25,SLM70P600,<CSUM><ETX>

6.6.9 Reset Run Hours

Description:
The host requests that the firmware resets the run hour counter.

Direction:
Host to supply

Syntax:
<STX><30><,><CSUM><ETX>

Example:
<STX>30,<CSUM><ETX>

Response:
<STX><30><,><$><,><CSUM><ETX>

6.6.10 Reset Faults

Description:
The host requests that the firmware resets all Fault messages and indicators.

Direction:
Host to supply

Syntax:
<STX><31><,><CSUM><ETX>

Example:
<STX>31,<CSUM><ETX>

Response:
<STX><31><,><$><,><CSUM><ETX>

6.6.11 Read Interlock Status

Description:
The host requests that the firmware read the status of the interlock channel.

Direction:
Host to supply

Syntax:
<STX><55><,><CSUM><ETX>

Response:
<STX><55><,><ARG1><,><CSUM><ETX>
Where ARG1 is Interlocks 1. A 1 indicates that the Interlock is energized

Example:
<STX>55,1,<CSUM><ETX>

6.6.12 Request kV Monitor

Description:
The host requests that the firmware report kV monitor.

Direction:
Host to supply

Syntax:
<STX><60><,><CSUM><ETX>

Response:
<STX><60><,><ARG><,><CSUM><ETX>

Where:
<ARG>=0-4095 in ASCII format representing unscaled value.

Example:
<STX>60,4095,<CSUM><ETX>

6.6.13 Request mA Monitor

Description:
The host requests that the firmware report mA monitor.

Direction:
Host to supply

Syntax:
<STX><61><,><CSUM><ETX>

Response:
<STX><61><,><ARG><,><CSUM><ETX>

Where:
<ARG>=0-4095 in ASCII format representing unscaled value.

Example:
<STX>61,4095,<CSUM><ETX>

6.6.14 Request –15V LVPS

Description:
The host requests that the firmware report –15V LVPS.

Direction:
Host to supply

Syntax:
<STX><65><,><CSUM><ETX>

Response:
<STX><65><,><ARG><,><CSUM><ETX>

Where:
<ARG>=0-4095 in ASCII format representing unscaled value.

Example:
<STX>65,4095,<CSUM><ETX>

6.6.15 Request Faults

Description:
The host requests that the firmware report Faults.

Direction:
Host to supply

Syntax:
<STX><68><,><CSUM><ETX>

Response:
<STX><68><,><ARG1><,><ARG2><,><ARG3><,><ARG4><,><ARG5><,
><ARG6><><,><ARG7><,><CSUM><ETX>

Where:
<ARGx> 1 = Fault, 0 = No Fault in ASCII format

ARG1 = ARC
ARG2 = Over Temperature
ARG3 = Over Voltage
ARG4 = Under Voltage
ARG5 = Over Current
ARG6 = Under Current
ARG7 = Wathdog

Example:
<STX>67,0,0,0,0,0,1,0,0,<CSUM><ETX>

6.6.16 Program Local/Remote Mode

Description:
The host requests that the firmware to switch between Local and Remote Mode.

Direction:
Host to supply

Syntax:
<STX><99><,><ARG><,><CSUM><ETX>

Where:
<ARG> 1 = Remote, 0 = Local in ASCII format

Example:
<STX>99,1,<CSUM><ETX>

Response:
<STX><99><,><$><,><CSUM><ETX>
<STX><99><,><ARG><,><CSUM><ETX>

where <ARG> = error code

Error Codes TBD,
1 = out of range

6.6.17 Program RS-232 Baud rate

Description:
The host requests that the firmware change the Baud rate for RS-232.

Direction:
Host to supply

Syntax:
<STX><07><,><ARG><,><CSUM><ETX>

Where:
<ARG> 1 = 9.6k in ASCII format
<ARG> 2 = 19.2k in ASCII format
<ARG> 3 = 38.4k in ASCII format
<ARG> 4 = 57.6k in ASCII format
<ARG> 5 = 115.2k in ASCII format

Example:
<STX>07,1,<CSUM><ETX>

Response:
<STX><07><,><$><,><CSUM><ETX>
<STX><07><,><ARG><,><CSUM><ETX>

where <ARG> = error code

Error Codes TBD,
1 = out of range

6.6.19 Program User Configs

Description:
The host requests that the firmware program the user configs.

Direction:
Host to supply

Syntax:
<STX><09><,><ARG1><,><ARG2><,><ARG3><,><ARG4><,><ARG5><,><ARG6><,><ARG7><,><ARG8><,><ARG9><,><CSUM><ETX>

Where:
<ARG1> = 1 = ROV enabled, 0 = ROV disabled in ASCII format.
<ARG2> = 0-110 in ASCII format representing the overvoltage percentage.
<ARG3> = 1-600 in ASCII format representing the ramp rate in seconds from .1 to 60sec.
<ARG4> = 1 = AOL enabled, 0 = AOL disabled in ASCII format.value.
<ARG5> = 0-20 in ASCII format representing the arc count.
<ARG6> = 0-60 in ASCII format representing the arc period in seconds.
<ARG7> = 0-500 in ASCII format representing the arc quench time in milli-seconds.
<ARG8> = 1 = ARC re-ramp enabled, 0 = ARC re-ramp disabled in ASCII format.
<ARG9> = 1 = No Arc detect, 0 = Arc detect in ASCII format.

Example:
<STX>09,1,50,100,0,10,30,250,1,0, <CSUM><ETX>

Response:
<STX><09><,><$><,><CSUM><ETX>
<STX><09><,><ARG><,><CSUM><ETX>

where <ARG> = error code

Error Codes
1 in ASCII format = Invalid Arc Rate warning message:
An invalid arc rate(Time period/Arc Count) of more than 1 arc per second has been entered, these values along with the other variables in the command string have been disregarded by the HVPS.

2 in ASCII format = NAD Enabled warning message:
The **N**ot **A**rc **D**etect mode has been enabled. In this mode the HVPS has no Arc shutdown protection. The HVPS is designed to handle 1 arc per second. Exceeding 1 arc per second could cause damage to the HVPS.**HVPS failure caused by excessive arcing will not be covered under the warranty**.

6.6.20 Request unit Scaling

Description:
The host requests that the firmware report the unit scaling.

Direction:
Host to supply

Syntax:
<STX><28><,><CSUM><ETX>

Example:
<STX>28, <CSUM><ETX>

Response:
<STX><28><,>< ARG1><,>< ARG2><,><CSUM><ETX>

Where:
<ARG1> =0-65535 in ASCII format representing the voltage full-scale value.
<ARG2> =0-65535 in ASCII format representing the current full-scale value.

Example:
<STX>28,7000,856<CSUM><ETX>
Voltage full scale = 70.00kV
Current full scale = 8.56mA

6.6.21 Request User Configs

Description:
The host requests that the firmware report the User Configs.

Direction:
Host to supply

Syntax:
<STX><27><,><CSUM><ETX>

Example:
<STX>27, <CSUM><ETX>

Response:
<STX><27><,><ARG1><,><ARG2><,><ARG3><,><ARG4><,><ARG5><,><ARG6><,><ARG7><,><ARG8><,><ARG9><,><CSUM><ETX>

Where:
<ARG1> = 1 = ROV enabled, 0 = ROV disabled in ASCII format.
<ARG2> = 0-110 in ASCII format representing the overvoltage percentage.
<ARG3> = 1-600 in ASCII format representing the ramp rate in seconds from .1 to 60sec.
<ARG4> = 1 = AOL enabled, 0 = AOL disabled in ASCII format.value.
<ARG5> = 0-20 in ASCII format representing the arc count.
<ARG6> = 0-60 in ASCII format representing the arc period in seconds.
<ARG7> = 0-500 in ASCII format representing the arc quench time in milli-seconds.
<ARG8> = 1 = ARC re-ramp enabled, 0 = ARC re-ramp disabled in ASCII format.
<ARG9> = 1 = No Arc detect, 0 = Arc detect in ASCII format.

Example:
<STX>27,1,50,100,0,10,30,250,1,0, <CSUM><ETX>

6.6.22 Watchdog Enable

Description:
The host requests that the firmware enable the Communication Watchdog.

Direction:
Host to supply

Syntax:
<STX><89><,><ARG><,><CSUM><ETX>

Where:
<ARG> 1 = Enable, 0 = Disable in ASCII format

Example:
<STX>89,1,<CSUM><ETX>

Response:
<STX><89><,><$><,><CSUM><ETX>
<STX><89><,><ARG><,><CSUM><ETX>

where <ARG> = error code

Error Codes TBD,
1 = out of range

6.6.23 Watchdog Tickle

Description:
The host requests that the firmware resets the Watchdog timer.

Direction:
Host to supply

Syntax:
<STX><88><,><CSUM><ETX>

Response:
<STX><88><,><$><,><CSUM><ETX>
<STX><88><,><ARG><,><CSUM><ETX>

where <ARG> = error code

Error Codes TBD,
1 = out of range

6.6.24 Request Analog Monitor Readbacks

Description:
The host requests that the firmware transmit the present values of Analog Monitor Readbacks.

Direction:
Host to supply

Syntax:
<STX><19><,>< CSUM><ETX>

Example:
<STX><19>,< CSUM><ETX>

Response:
<STX><19><,><ARG1><,><ARG2><,><ARG3><,>< CSUM><ETX>

Where:
ARG1 = kV monitor = 0 – 4095
ARG2 = mA monitor = 0 – 4095
ARG3 = unused = 0– 4095

Example:
<STX><19>,4095,4095,4095,< CSUM><ETX>

6.7 SPELLMAN TEST COMMANDS

- Program Hardware Version (Hardware setup)
- Program Model number(Hardware setup)
- Set USB Mode (Program USB)
- Set USB Page Address (Program USB)
- Send USB Page Data (Program USB)
- Toggle Passthrough Mode (Diagnostics)
- Store A/D Calibration Value (Hardware setup)
- Request Miscellaneous Analog Readbacks

Contact Spellman High Voltage for details and the syntax of these commands.

6.8 SERIAL COMMAND HANDLING

6.8.1 Command Time Out The host computer should set a serial time out at approximately 100mS. This allows the DSP to process the incoming message, and transmit a response. The DSP will initiate a reply to incoming messages in approximately 1-2mS, with a worst case of 5mS.

6.8.2 Buffer Flushing

The DSP will flush the incoming serial data buffer every time an STX is received. This provides a mechanism to clear the receive buffer of partial or corrupt messages.

6.8.3 Handshaking

The only handshaking implemented on the host interface, is built in to the implementation of this protocol. That is, the host must initiate all communications. If the supply receives a program command, an acknowledge message is sent back to the host via the “$” message. If the host does not receive an acknowledge within the time out window, the host should consider the message lost or the device off-line.

Similarly, if the supply receives a request command, the requested data is sent back to the host. If the host does not receive the requested data within the time out window, the host should consider the message lost or the device off-line.

This essentially uses the full-duplex channel in a half-duplex communication mode.

HIGH POWER 8C-30C SERIES

8kV to 30kV High Voltage Cap-Charging Supplies

This High Power line of high-voltage regulated DC to DC converters is an extension of the C Series, directly addressing the high power density needs of >30 watt applications. High Power 8C - 30C units provide up to 60/125/250 watts. This high power density is especially suited to high-energy systems with large capacitances, fast repetition rates, or high continuous-DC-power requirements. See Application Note 10 for more changing information. Typical applications for the High Power 8C-30C Series include the following: laser, cap-charger, pulse generators, Q-switch, and TDR test equipment.

- 7 models from 0 to 8kV through 0 to 30kV
- 60, 125, or 250 watts of output power
- Maximum Iout capability down to 0 Volts
- Maximum Iout during charge/rise time
- Output short-circuit protection
- Very fast rise with very low overshoot
- High efficiency
- High power to voltage density
- Very low profile
- Output current & voltage monitors
- >200,000 hour MTBF @65°C
- Fixed-frequency, low-stored-energy design
- UL/cUL Recognized Component; CE Mark (LVD & RoHS)

PARAMETER	CONDITIONS																						UNITS
INPUT		ALL TYPES																					
Voltage Range	Full Power	+ 23 to 30																					VDC
Voltage Range	Derated Power Range	60W, 125W: + 11 to 30, 250W: 15-30																					VDC
Current	Standby / Disable	< 40																					mA
Current	No Load, Max Eout	8C to 15C < 500, 20C to 25C < 600																					mA
Current	Max Load, Max Eout	60W: 3.25, 125W: 6.5, 250W: 13																					A
AC Ripple Current	Nominal Input, Full Load	< 50																					mA p-p
OUTPUT		8C			10C			12C			15C			20C			25C			30C			
Voltage Range	Nominal Input	0 to 8,000			0 to 10,000			0 to 12,000			0 to 15,000			0 to 20,000			0 to 25,000			0 to 30,000			VDC
Power	Nominal Input, Max Eout	60	125	250	60	125	250	60	125	250	60	125	250	60	125	250	60	125	250	60	125	250	Watts
Current	Iout, Entire Output Voltage Range	7.5	15.5	31.2	6	12.5	25	5	10.5	20.8	4	8.3	16.7	3	6.25	12.5	2.4	5	10	2	4.17	8.33	mA
Current Scale Factor	Full Load	4.7	14.2	6.25	4.1	10.9	5	4.0	7.4	4.17	4.0	7.5	3.33	.65	.653	2.5	.65	.650	2	.65	.642	1.67	mA/V
Voltage Monitor Scaling		60W & 125W Models - 1000:1 ± 2% into 10MΩ; 250W Models - 10,000:1 ± 2%																					-
Internal Capacitance	Capacitance / 95% Decay (50Meg Load)	4400/659	2200/330	1500/225	2933/439	1467/220	1500/225	2933/439	1467/220	750/112	2200/330	1100/165	750/112	1320/200	880/132	750/112	1100/165	733/110	500/75	825/125	550/85	500/75	pF/mS
Ripple	Full Load, Max Eout	< 1%												< 1%									V p-p
Rise Time	Max Iout, Various C Loads & Eout	Figure A																					-
Storage Capacitance	Internal	4400	2200	1500	2933	1467	1500	2933	1467	750	2200	1100	750	1320	880	750	1100	733	500	825	550	500	pF
Overshoot	C Load, 0 Eout to Full Eout	< 1%																					V pk
Line Regulation	Nom. Input, Max Eout, Full Power	< 0.01%																					VDC
Static Load Regulation	No Load to Full Load, Max Eout	< 0.01%																					VDC
Stability	30 Min. warmup, per 8 hr/ per day	< 0.01% / < 0.02%																					VDC
PROGRAMMING & CONTROLS		ALL TYPES																					
Input Impedance	Nominal Input	+ Output Models 1.1MΩ to GND, - Output Models 1.1MΩ to +5 Vref																					MΩ
Adjust Resistance	Typical Potentiometer Values	10K to 100K (Pot across Vref. & Signal GND, Wiper to Adjust)																					Ω
Adjust Logic	0 to +5 for +Out, +5 to 0 for - Out	+4.64 VDC for +Output or +0.36 for -Output = Nominal Eout																					-
Output Voltage & Impedance	T=+25°C	+ 5.00VDC ± 1%, Zout = 464Ω ± 1%																					-
Enable/Disable		0 to +0.8V Disable, +2.0 to 32 Enable (Default = Enable)																					VDC
ENVIRONMENTAL		ALL TYPES																					
Operating	Full Load, Max E out, Case Temperature	-40 to +65																					°C
Coefficient	Over the Specified Temperature	±50 (±25 Optional)																					PPM/°C
Thermal Shock	Mil-Std-810, Method 503-4, Proc. II	-40 to +65																					°C
Storage	Non-Operating, Case Temp.	-55 to +105																					°C
Humidity	All Conditions, Standard Package	0 to 95% non-condensing																					-
Altitude	Standard Package, All Conditions	Sea Level through 70,000																					ft
Shock	Mil-Std-810, Method 516.5, Proc. IV	20																					G's
Vibration	Mil-Std-810, Method 514.5, Fig.514.5C-3	10																					G's

Specifications subject to change without notice.

C = uF
V = Volts
I = mA
T = mS

$$T = \frac{C \times V}{I}$$

C = uF
V = kV
I = mA
F = Hz

$$I = C \times V \times F$$

C = uF
V = kV
I = mA
F = Hz

$$F = \frac{I}{C \times V}$$

C = uF
E^2 = kV
J = Ws

$$J = \frac{C \times E^2}{2}$$

Figure A - Rise Time Formulas

NOTES: Capacitance must include HVPS internal Capacitance.

HIGH POWER 8C-30C SERIES

8kV to 30kV High Voltage Cap-Charging Supplies

8C TO 15C - 60/125W

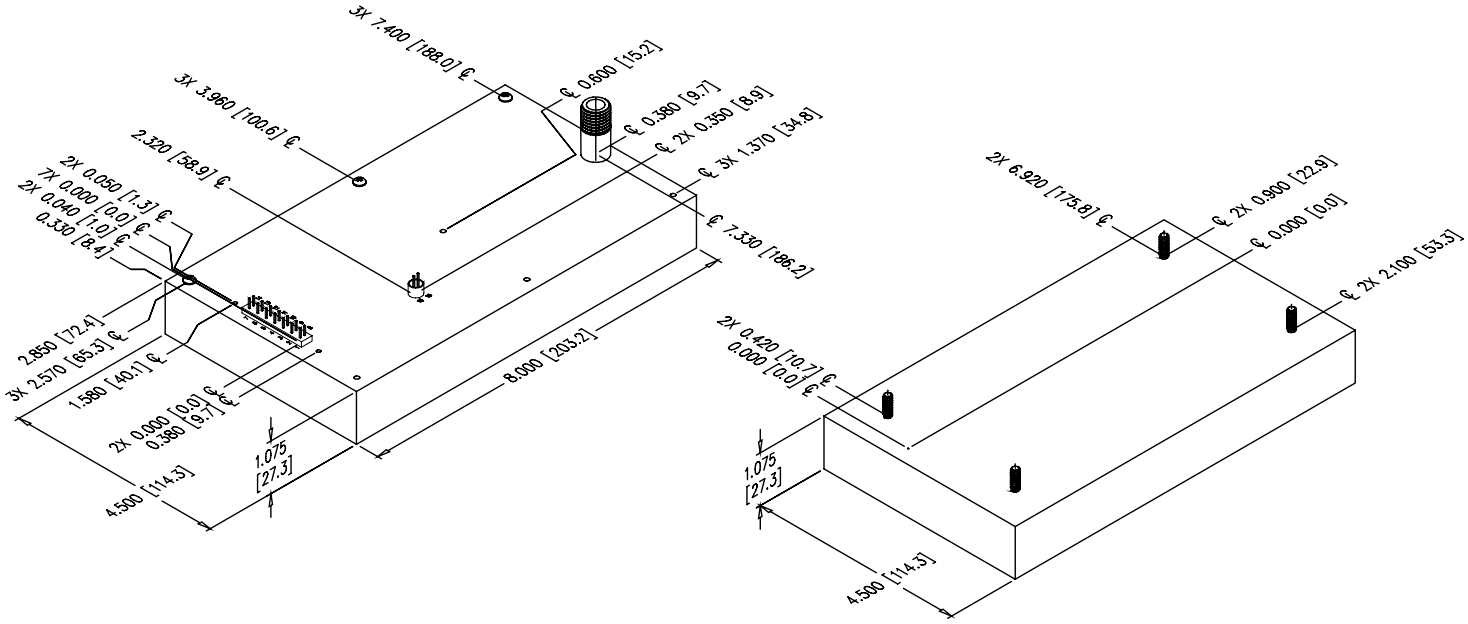

20C TO 30C - 60/125W

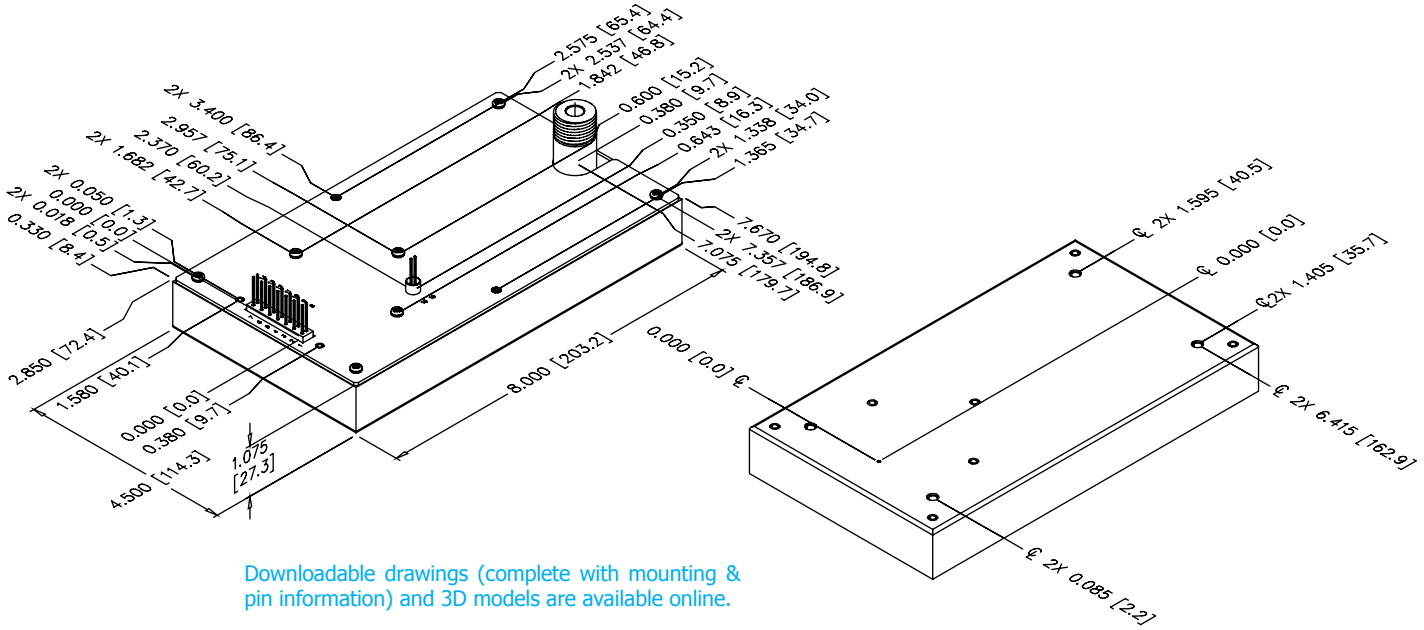

Downloadable drawings (complete with mounting & pin information) and 3D models are available online.

1800 Ocean Avenue, Ronkonkoma, NY 11779
Phone: 1-631-471-4444 Fax: 1-631-471-4696 www.ultravolt.com

HIGH POWER 8C-30C SERIES

8kV to 30kV High Voltage Cap-Charging Supplies

8C TO 30C - 250W (PRELIMINARY)

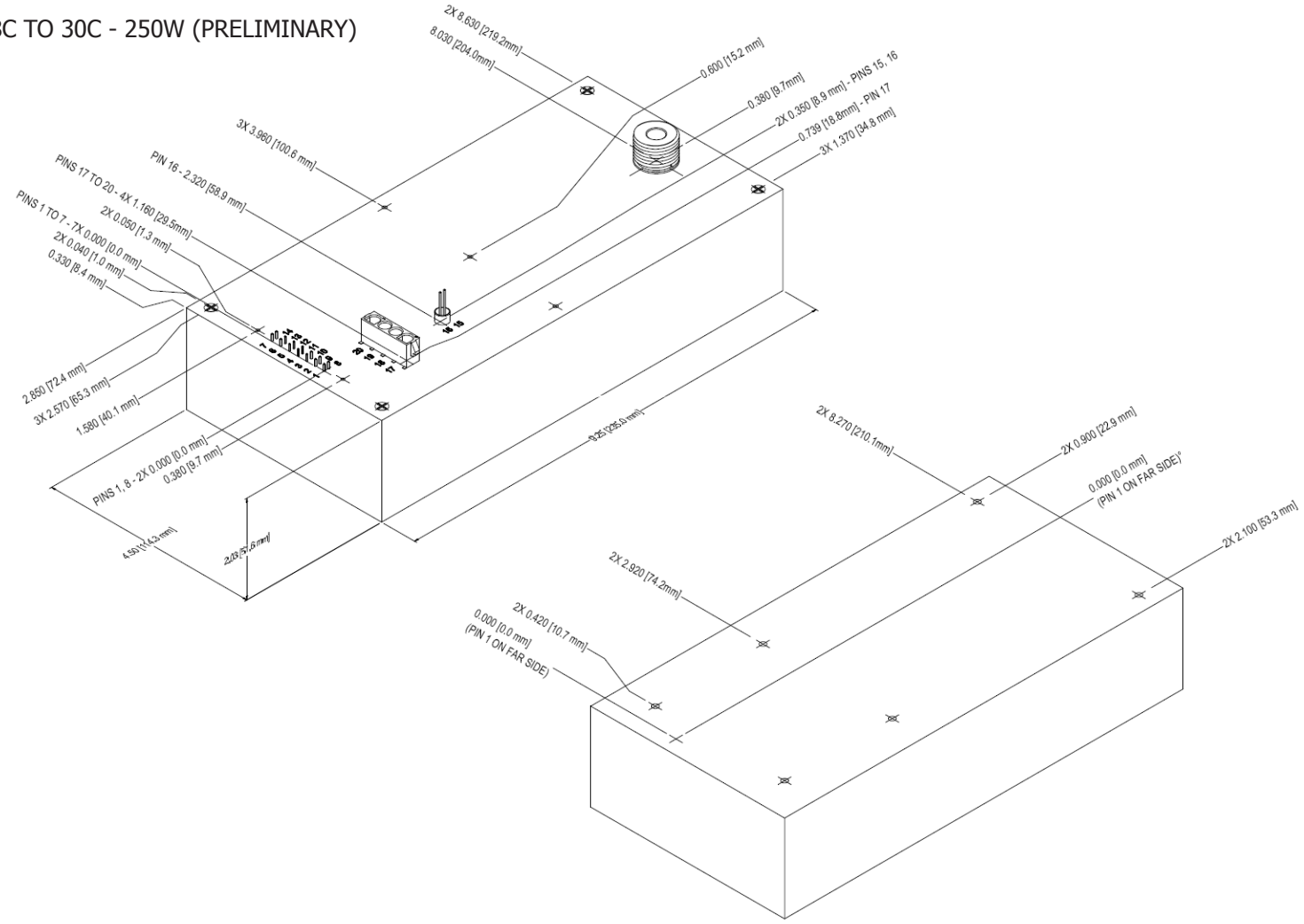

CONSTRUCTION

Epoxy-filled Aluminum Box
Chem film per MIL-A-8625 Type II (Anodizing)

SIZE - 60 & 125W MODELS

Volume 38.7 in³ (634cc)
Weight 2.6 lbs. (1.18kg)

SIZE - 250W MODELS

Volume 84.5 in³ (1386cc)
Weight 5.6 lbs. (1.18kg)

TOLERANCE

Overall ±0.025" (0.64)
Pin to Pin ±0.015" (0.38)
Hole to hole location ±0.025" (0.64)

PINS

Gold-plated 0.025 (0.64) sq.
The center of the pins and mounting holes are located from the center of pin 1
Pins 1 thru 14 spacing 0.100 (2.54) x 0.200 (5.08) on center, height from cover 0.280 (7.11) min
Pins 15 and 16 spacing 0.100 (2.54) on center, height from cover 0.450 (11.43) min

HV OUTPUT CONNECTION

Unit requires an LGH flying lead connector for proper operation:
8C to 15C (60W & 125W Models) = CA-20KV-1000
20C to 30C (60W & 125W Models) = CA-40KV-1000
8C to 30C (250W Models) = CA-40KV-1000

1800 Ocean Avenue, Ronkonkoma, NY 11779
Phone: 1-631-471-4444 Fax: 1-631-471-4696 www.ultravolt.com

HIGH POWER 8C-30C SERIES

8kV to 30kV High Voltage Cap-Charging Supplies

CONNECTIONS	
PIN	FUNCTION
1 & 8	Input-Power Ground Return
2 & 9	Positive Power Input
3	Iout Monitor
4	Enable/Disable
5	Signal Ground Return
6	Remote Adjust Input
7	+5VDC Reference Output
10	N/C (or Arc Detect option)
11, 12, & 13	N/C
14	Eout Monitor
15 & 16	HV Ground Return

All grounds joined internally. Power-supply mounting points isolated from internal grounds by >100kΩ, .01uF / 500V (Max).

ORDERING INFORMATION		
Type	0 to 8,000 VDC Output	8C
	0 to 10,000 VDC Output	10C
	0 to 12,000 VDC Output	12C
	0 to 15,000 VDC Output	15C
	0 to 20,000 VDC Output	20C
	0 to 25,000 VDC Output	25C
	0 to 30,000 VDC Output	30C
Input	24VDC Nominal	24
Polarity	Positive Output	-P
	Negative Output	-N
Power	60 Watts Output	60
	125 Watts Output	125
	250 Watts Output	250
Heat Sink	.400" High (sized to fit case)	-H
PCB Support	(5) 0.187" standoffs on top cover	-Z11
Enhanced Interface	5V Controls and Monitors	-I5
	10V Control and Monitors	-I10
Options	Arc Detect	-AD
	Arc Quench	-AQ
	25PPM Temperature Coefficient	-25PPM

Note: For more information on the enhanced interface options, download the I5/I10 Option datasheet.

Example: 8C24-P125

Type — Voltage, Model

Input

Polarity

Power

Popular accessories ordered with this product include CONN-KIT-HP, BR-7 and BR-8 mounting bracket kits and our full range of high voltage output connectors (see Accessories & Connectors datasheet).

CE c UL us

IEC-60950-1

RoHS COMPLIANT

Non-RoHS compliant units are available. Please contact the factory for more information.

Manufactured in USA

Rev. AB 12/14

1800 Ocean Avenue, Ronkonkoma, NY 11779
Phone: 1-631-471-4444 Fax: 1-631-471-4696 www.ultravolt.com

-I5 OPTION & -I10 OPTION

Enhanced Interface Options

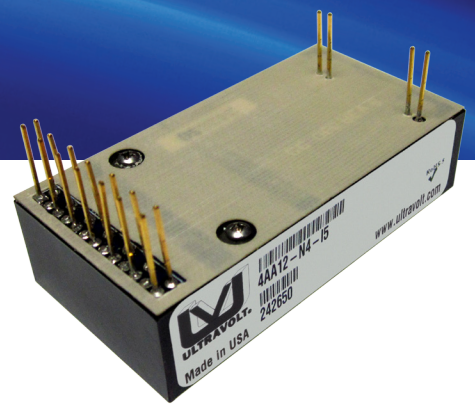

The –I5 and –I10 enhanced interface options further standardize and simplify the process of interfacing control electronics, both analog and digital, to an UltraVolt high voltage power supply. The interface features fixed ranges of calibrated control voltages and buffered monitor signals, eliminating the need for external scaling resistors or op-amps to achieve standard control ranges. Therefore, output control is always 0 to +5VDC (-I5) or 0 to +10VDC (-I10) for 0 to full scale output of positive or negative models. Likewise, output monitors are always 0 to +5VDC (-I5) or 0 to +10VDC (-I10) for 0 to full scale output. The current monitor is nulled to eliminate currents related to HV regulation and monitoring circuits. In conjunction with features such as constant current programming and constant voltage/constant current (CV/CC) auto crossover critical applications can be supported without additional circuitry.

The -I5 Option and -I10 Option are available on AA Series, A Series, High Power C Series, 10A Series modules, and F Option. Either option fits within the standard package size of the modules. On the AA Series and 10A Series models a double row header replaces the single row of pins.

For additional information on interfacing with the -I5 Option and -I10 Option, please review the -I5/-I10 Options Technical Note.

- Buffered, low output impedance and nulled current monitor
- Buffered, low output impedance voltage monitor
- Programming accuracy of ±1% full scale
- 0 to +5V or 0 to +10V remote programming for all polarites
- 0 to +5V or 0 to +10V remote programming for all modes
- +5V or +10V reference, ±0.05%, 5PPM/°C
- Constant voltage / constant current (CVCC) auto-crossover
- Current and voltage mode indicators

Typical applications for the -I5 Option or -I10 Option include: bias supplies, detectors, piezos, amplifiers, photomultiplier tubes (PMT), laser, cap-charging, pulsed power, pulse generators, test equipment, high pot testers, automated test equipment (ATE), and electrostatic precipitators.

PARAMETER	CONDITIONS	MODELS		UNITS
OUTPUT		-I5	-I10 (24Vin ONLY)	
Voltage Monitor Scale Factor	0 to Output Voltage	0 to +5 ± 1% Full Scale	0 to +10 ± 1% Full Scale	VDC
Current Monitor Scale Factor	0 to Output Current	0 to +5 ± 1% Full Scale	0 to +10 ± 1% Full Scale	VDC
PROGRAMMING & CONTROLS		ALL TYPES		
Input Impedance	Nominal Input	10MΩ to GND	10MΩ to GND	-
Adjust Resistance	Typical Potentiometer Values	10K to 100K (Pot across Vref. & Signal GND, Wiper to Adjust)		Ω
Adjust Logic	0 to 100% of Output	0 to +5.00 ± 1% Full Scale	0 to +10.00 ± 1% Full Scale	VDC
Reference Voltage	T=+25°C	+ 5.00 ± 0.1%	+10.00 ± 0.1%	VDC
Enable/Disable (ON/OFF)		0 to +0.5 Disable, +2.4 to 32 Enable (Default Open Circuit= Disabled)		VDC
Current Mode Indicator		Open drain indicator, active (pulled low) when unit is in current regulation, 100mA max current sink		-
Voltage Mode Indicator		Open drain indicator, active (pulled low) when unit is in voltage regulation, 100mA max current sink		-
Output Voltage Offset		± 0.2% of Max Vout		-

*All other specifications are in accordance with the specific model base datasheet. Specifications are subject to change without notice.

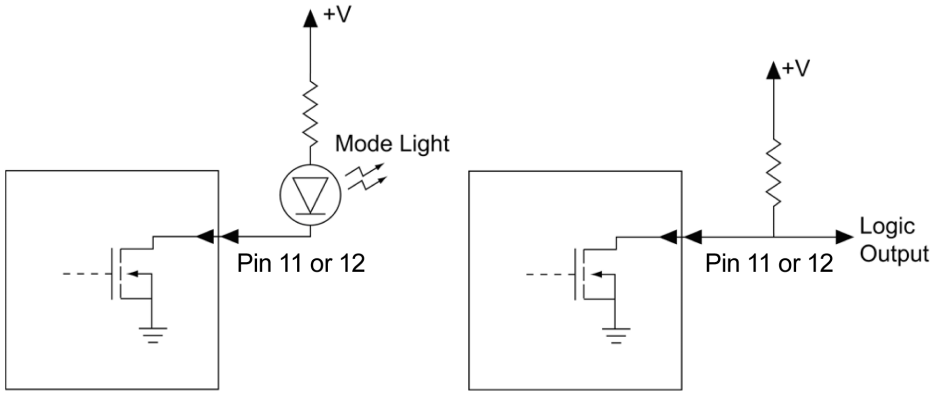

Figure 1: Typical Mode Indicator on the -I5 Option and -I10 Option

-I5 OPTION & -I10 OPTION

Enhanced Interface Options

I5/I10 ON AA SERIES & 10A SERIES

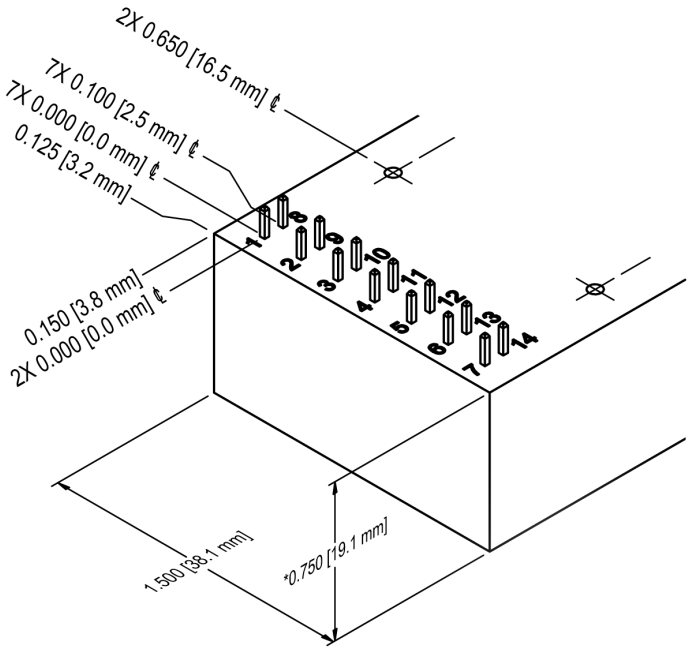

I5/I10 ON HIGH POWER C SERIES

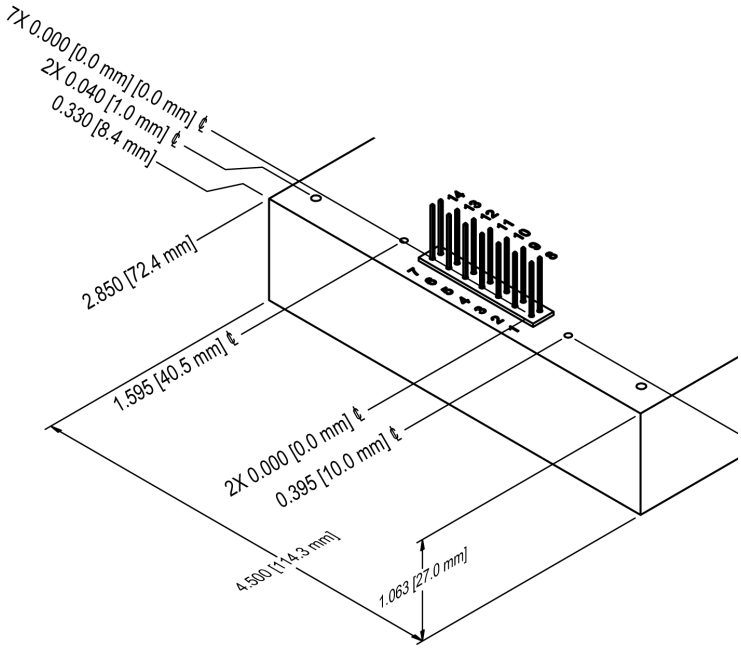

Downloadable drawings (complete with mounting & pin information) and 3D models are available online.

CONNECTIONS	
PIN	FUNCTION
1	Power Ground
2	Input Power
3	Buffered Current Monitor (5mA Maximum)
4	Enable (ON/OFF)
5	Signal Ground
6	Voltage Programming
7	Reference Voltage (5mA Maximum Sourcing)
8	Power Ground/HV Return
9	Input Power
10	N/C
11	Current Mode Indicator
12	Voltage Mode Indicator
13	Current Programming
14	Buffered Voltage Monitor (5mA Maximum)
15 & 16	HV Ground Return
17 & 18	HV Output

IEC-60950-1

Non-RoHS compliant units are available. Please contact the factory for more information.

Manufactured in USA

ORDERING INFORMATION	
5V Control & Monitors	-I5
10V Control & Monitors (24Vin only)	-I10

*The -I5 option and -I10 option are compatible with all standard module options.

Example: 1AA24-P20-I10

Option (Enhanced Interface)

Rev. G 10/14

1800 Ocean Avenue, Ronkonkoma, NY 11779
Phone: 1-631-471-4444 Fax: 1-631-471-4696 www.ultravolt.com

UltraVolt's "A" Series units are designed for DC-bias applications with feedback compensation optimized for dynamic loading. Multiple tuned and untuned LC and RC filters provide low ripple without a need for external capacitors. "A" Series units are applicable to low-speed, capacitor-charging applications. When calculating T_{rise}, the output charge current available is 66% of rated Iout and capacitance-to-charge should have the "A" Series unit's internal capacitance added.

UltraVolt's "C" Series units are designed specifically for pulsed loads and high-speed charging of small and large capacitive loads. DC and AC feedback loops are compensated to provide fast rise time with low overshoot. Current-limit circuits are enhanced to get in and out of limit as fast as possible to maintain high average charge currents while protecting the high-voltage power supply (HVPS) power stage. When calculating "C" Series T_{rise}, the output charge current available is 100% of rated I_{out}. "C" Series units have ½ to 1/10 of the filter capacitance of "A" Series units, allowing more energy to go to the load capacitance (see Fig. F in the "C" Series datasheet). When using a "C" Series unit in a DC-bias application, an external capacitor is recommended for filtering.

CONNECTIONS:

Note: **CAP LOAD MUST RETURN** to *HV Ground Return* (pin 8).

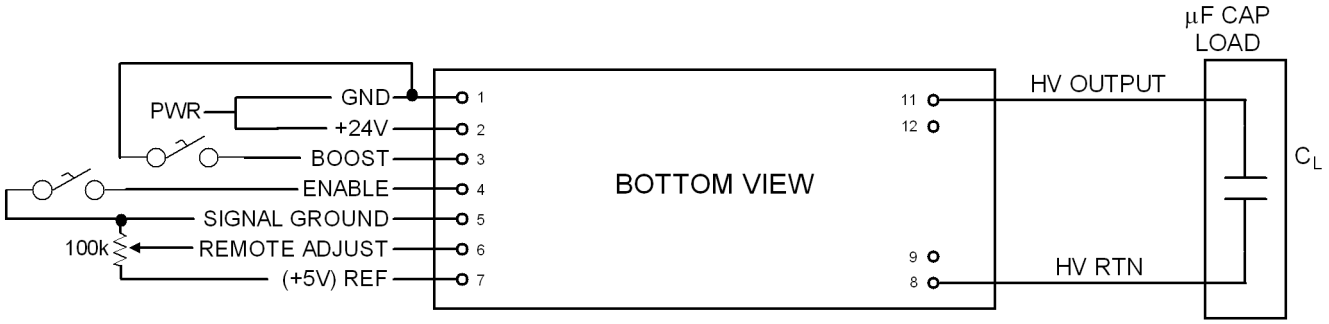

"20W/30W"

If the HVPS is to be grounded to the case, it should also be grounded via pin 8.

ENABLE:

Using *Enable/Disable* (pin 4) to activate the power supply after input power has been applied permits the user to use TTL logic to control HV outputs, (i.e. "1" state = ON, "0" state = OFF). This can be helpful in setting up redundant interlocks or shutting off the HVPS prior to firing a high-energy load. It also acts as an easy method to measure rise time by connecting the oscilloscope external sweep trigger input to the *Enable/Disable* (pin 4) prior to generating a positive "1" rise command (see Application Note #1).

RISE TIME:

Rise times are measured from start of discharge to the time required to rise within 99% of final regulated output. All rise-time data, however, is taken at +24VDC because different input-voltage

sources have somewhat different effects on rise time/overshoot (depending on capacitive load used).

The rise time required to charge an external capacitor load (C_L) can be computed in accordance with the formula shown below:

$$T = \frac{(C_L + C_{int})\ Volts}{(I_{short})}$$

Where:

T = Rise time in milliseconds to within 1% of final value (using an enable command)
C_L = External load capacitance in micro farads
C_{int} = Internal supply capacitance (see UV HVPS datasheet Fig. F)
Volts = Voltage in volts to which the capacitor is charged, starting from 0 volts
I_{short} = The output current of the "C" Series power supply in milliamperes when measured under output short-circuit conditions.

HIGH CURRENT PULSED APPLICATIONS:

In cases when large transient discharges of small duration are applied to the output of a "C" Series unit, the user may wish to isolate the "C" Series power supply from the load C_L. This is typically done to place a more average current demand on the high-voltage power supply, keeping peak currents below the HVPS current-limit point. This allows the HVPS to provide the maximum average power to the load by adding a filter cap directly across the *HV Output* (pins 10 & 11) and *HV Ground Return* (pins 8 & 9). A 10Ω to 1kΩ resistor can then be added between the HV output and the load C_L. This will also reduce the tendency to introduce overshoot in the output waveform, which could cause a ringing on the HV output when driving certain types of loads (see diagram below).

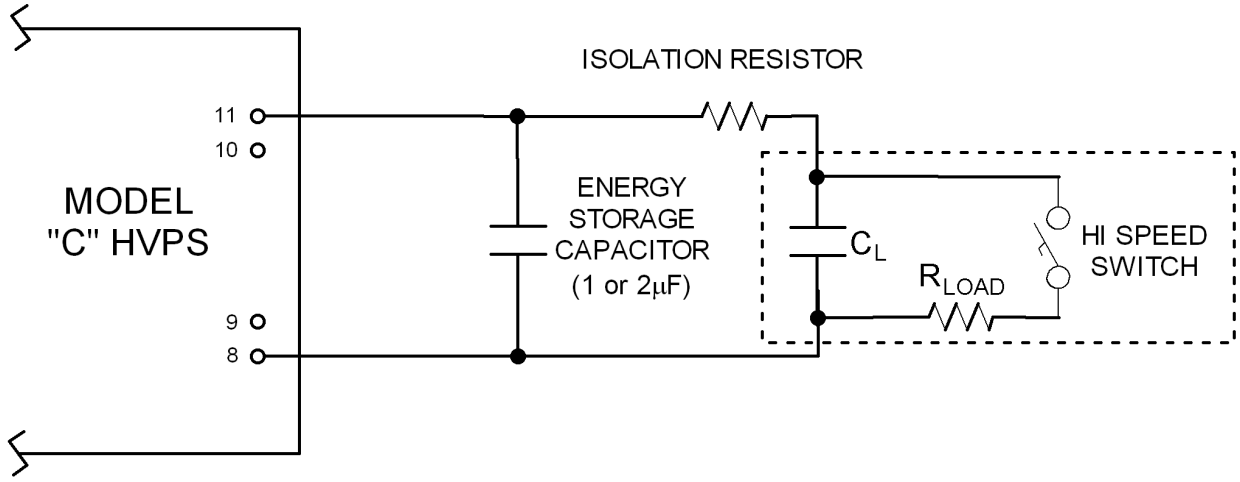

Note: The energy-storage capacitor and the isolation resistor control "pulse droop" during high-discharge-current conditions and average the peak current, thereby reducing the amount of time the HVPS is in peak current limit.